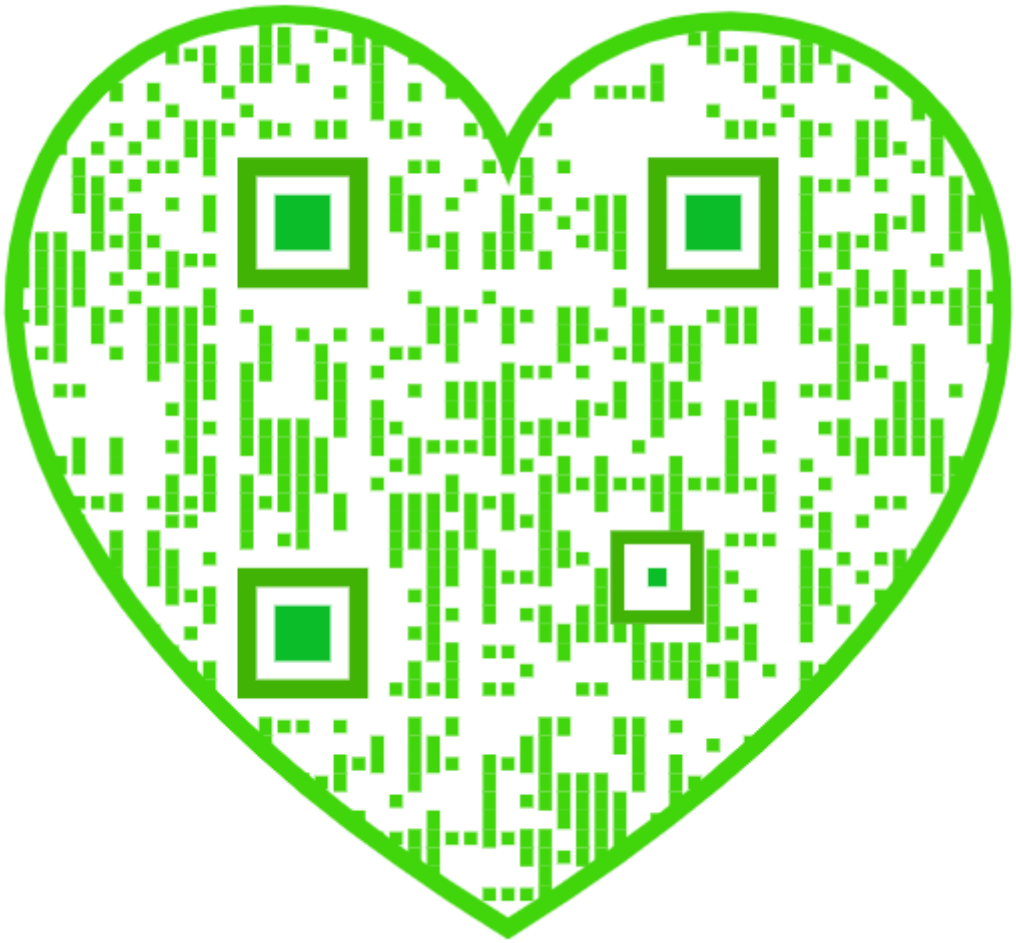

THE

MECHANICAL ENGINEERING OF COLLIERIES.

By T. CAMPBELL FUTERS.

VOL. I.

1. Boring.
2. Shaft Sinking.
3. Surface Arrangements.
4. Shafts and Headgears.

LONDON :
THE CHICHESTER PRESS
(Proprietors, The Colliery Guardian Company Limited)
30 & 31, FURNIVAL STREET, HOLBORN, E.C.
1905.

(All rights of publication or translation are reserved.)

168976
NOV 1 8 1912

6036837

LG
98

THE MECHANICAL ENGINEERING OF COLLIERIES.

PUBLISHERS' NOTE.

The late Mr. C. M. PERCY'S work on "The Mechanical Engineering of Collieries" first appeared serially in the columns of the *Colliery Guardian*, and was afterwards published by the Colliery Guardian Co. Ltd., in book form. It passed through several editions, and is now being replaced by a modern and complete work on the same subject, now appearing each week in the columns of the *Colliery Guardian*. The present volume forms Part I. of the series.

INTRODUCTION.

IT seems remarkable that though the difficulties encountered with the unwatering of mines stimulated the invention of the steam engine, and further difficulties experienced in the haulage of coal brought about the invention—or rather the development—of the locomotive; yet whilst other branches of engineering rapidly developed—notably the marine engine—the mechanical engineering of collieries remained neglected. With the development, however, of the steam engine, and the consequent greater demand for coal, attention was forced to the improvement of colliery machinery, and about the time the late Mr. C. M. Percy first published his articles on "The Mechanical Engineering of Collieries" in the columns of *The Colliery Guardian*, improvements began to be effected. Larger shafts were being sunk, better and more economical engines, larger cages with two and three decks were being adopted; but the old arrangements of banking-out, end-on kick-ups, and fixed-bar screens, entailing considerable hand labour, with very inefficient means of cleaning and sorting the coal, still continued in use. Later, with increased competition, further improvements began to take place, and within the last twenty years practically the whole of the banking-out and screening and sorting arrangements have undergone considerable change, until at the present time the mechanical arrangements of a large up-to-date colliery are examples of high engineering skill and ingenuity; and it is due to these improvements that the large outputs of coal now so common at individual collieries, and which a few years ago would have seemed impossible, and the handling, cleaning and sorting of these outputs has been made possible.

Not only have improvements been effected in the arrangements for dealing with the coal, but more care and attention have been given to the selection and class of the machinery employed. The old egg-end boiler is now principally seen doing duty as a water tank, the high-pressure Lancashire, or water-tube boiler taking its place for generating steam. Shafts appear to be still increasing in diameter, and are being sunk with power-driven machine drills, winding engines fitted with expensive valve gears to economise steam, and capable of dealing rapidly with heavy loads, large cages, banking-out arrangements to save time due to changing decks of cages, automatic tipplers, creepers, shaking and revolving screens and travelling belts for cleaning the coal are now a *sine quâ non*. Various arrangements have been brought out for the prevention of overwinding, but do not seem to have met with much favour. Electric lighting is now usual, and electricity

as a means of transmitting power is becoming extensively adopted, and vieing in this respect with compressed air. Mechanical coal-cutting is also now beyond the experimental stage, and growing in importance.

Considerable improvements have also been made in coking and washing plant, the old beehive oven is disappearing, and a vast amount of capital is being laid out in erecting new batteries of coke ovens, which not only yield valuable by-products but better coke, and the waste gases generate sufficient steam to supply the whole of the power required at the colliery, and one enterprising firm propose further to utilise the waste heat to transmit electric power to neighbouring towns. There are no doubt many instances where this would be done with profit to both the owner of the coke ovens and the consumer of the energy.

The mechanical engineering of collieries, then, is of growing importance, and much still remains to be done. The question of winding from great depths remains to be satisfactorily solved; and the utilisation of slack and waste from collieries might receive with advantage more attention, and in this respect the question of generating electricity at coalpit centres is important. No quite satisfactory appliances have ever yet been invented to prevent the cage falling in the case of a broken rope, and the sad accidents due to this cause are to be regretted; though when we consider the vast number of men who descend and ascend daily into and out of mines, it speaks volumes for the careful and efficient supervision and attention to winding ropes and arrangements, especially in our own country, where safety appliances are practically unheard of.

With the growth of the mechanical appliances in and about a mine and with the introduction of electricity, the responsibilities of the colliery manager have increased, and a colliery manager, instead of being merely a mining engineer, must now be a competent mechanical and electrical engineer, and hence the training of colliery managers has given rise to much discussion. Whether it is wise to expect a colliery manager to have that knowledge and experience in mechanical and electrical engineering—each in themselves separate professions, requiring years of training—and at the same time to be an expert mining engineer, capable of directing the operations of working and winning large areas of coal, with all its attendant difficulties and dangers, requiring by Act of Parliament an apprenticeship or training of not less than five years, is a question to be decided. Abroad, it is said, the colliery manager is more highly scientifically trained, but it is also said he is not such a good "pitman." It is to be hoped, therefore, that with the development of the mechanical and electrical engineering of collieries, in our own country at least, the colliery manager will not neglect that first and necessary qualification, to be—what he has hitherto been—a mining engineer *par excellence.*

CONTENTS.

INTRODUCTION .. .. vii.

CHAPTER I.—Boring 1

The Diamond Drill — Rope Boring — Hand Boring — Boring Against Old Workings — Boring Under Water.

CHAPTER II.—Shaft Sinking 29

The Best Form of Shaft—The Horden Sinking—Folding Doors and Framing—Sinking Scaffolds—Kibbles—The Newbattle Sinking Scaffold—Walker's Sinking Frame—Guide Ropes—Walker's Rider—Pneumatic Water Barrel—Pumping—Morpeth Colliery Sinking Pump—The Deane Sinking Pump—The Pulsometer—The Denaby Sinking Pump—Evans' Cornish Pumps—Suspending Pipes in Shaft—Flange Joint for Steel Pipes—Electric Duplex Sinking Pump—Crab Engines—Temporary Winding Engines—Winches—Crib Rings—Wood Framing for Lining Rectangular Shafts—Channel Bar Piling—Cast Iron Tubbing—Wedging Curb for Tubbing—The Kind-Chaudron System—Up-Over Sinking—Freezing Plant.

CHAPTER III.—Surface Arrangements 80

Position of Pits—The Cages—Railway Arrangements — Screens — Belts —Boilers—Fans—Power Plant—Shops and Sheds—Water Supply.

CHAPTER IV.—Shafts and Headgears 87

The Size of Shafts — Arrangement of Cages — Shaft Divisions — Rope Guides—Tension Screws - Guide Shoes—Wood Buntons—Guide Rails Pulley Frames—Stresses on Headgear—Wood Headgear at Broomhill—Steel Headgear—Headgear for Vertical Winding Engine—Shaft Gates—Headgear Pulleys—Changing Headgear Pulleys.

CHAPTER I.

BORING.

In proving ground by boring, one of the following methods is adopted :—

1. By the diamond drill.
2. By rope boring.
3. By hand boring.

The first two are the systems usually adopted by contractors, (1) being used when an accurate knowledge of the underlying strata is required, (2) being usually adopted for artesian well boring when the anticipated depth of the hole is great, whilst the third is used for small holes of comparatively shallow depth, and a complement of hand-boring tools usually forms part of a colliery equipment.

The diamond drill consists of a hollow tool set with diamonds which form the cutting edges, and drills an annular hole, leaving a core in the centre of the tool which is brought to the surface, and thus gives an accurate section of the strata passed through. Fig. 1 is a diagrammatic view of the arrangement. The drill is usually worked by a steam engine, and a stream of water is forced down the interior of the rods by means of a small force pump, which keeps the tool cool and washes away the *débris*, part of which settles in the sediment tube, and is examined each time the tool is withdrawn; the arrows show the direction of the water, and the swivel shown is that used in the Beaumont machine.

In America diamond boring has almost become a fine art, and figs. 2, 3, and 4 show three views of a power-driven machine with hydraulic feed and swivel head—an excellent arrangement which enables the rods to be withdrawn without moving the machine—as manufactured by the American Diamond Rock Drill Company. Fig. 5 shows another machine, by the same firm, fitted with oscillating engines and hydraulic feed; and fig. 6 shows a machine with a single-cylinder hydraulic feed, and arranged to slide back when withdrawing rods, as supplied by Messrs. Fraser and Chalmers. Figs. 7 and 8 show two views of a power-driven machine for underground purposes, which is arranged with the swivel head and differential screw feed, by the American Diamond Rock Drill Company, and figs. 9 and 10 show two views of their hand-power drill, whilst figs. 11 and 12 show two views of Messrs. Fraser and Chalmers' electrically-driven drill, and figs. 13 and 14 show two hand-power drills by the same firm. The hand-

power drills appear to be exceedingly handy tools, especially for underground purposes, and the small machine shown in figs. 9 and 10 will bore a hole from 350 to 400 feet in depth, $1\frac{9}{16}$ in. in diameter, and weighs complete as set up only 200 lb., the heaviest single piece only weighing 25 lb. It will also bore a hole at any angle. The swivel head is, as shown in the illustrations, arranged to bore a vertical hole, but it may be swivelled to be at any angle, and instead of having to move the

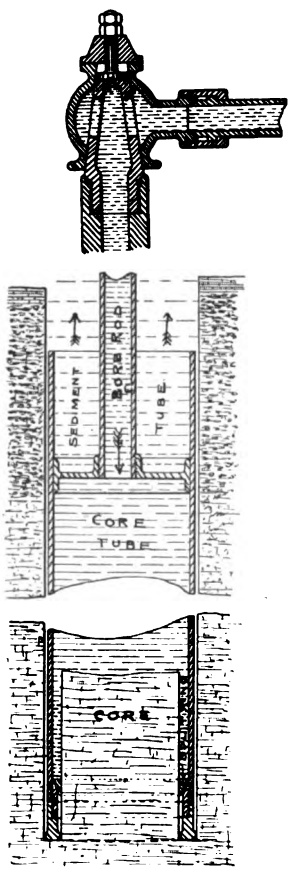

FIG. 1. – DIAMOND DRILL.
Diagrammatic View.

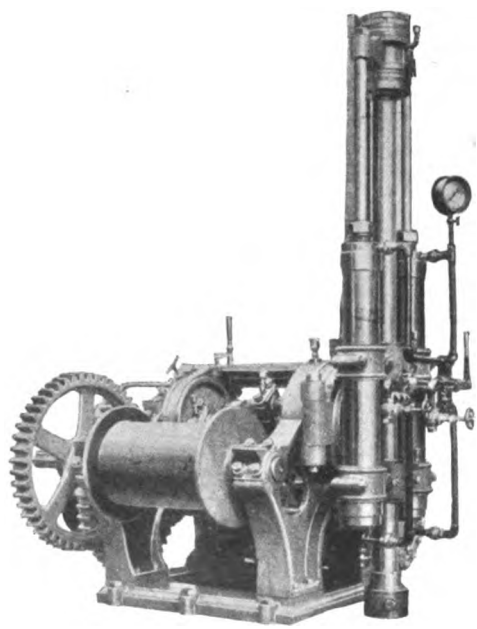

FIG. 2.—AMERICAN DIAMOND BORING MACHINE.

machine back in order to withdraw the rods, it is only necessary to open the hinged swivel head and turn it back out of the way.

The hydraulic feed is interesting, and fig. 15 is a sectional view of the arrangement fitted to diamond drilling machines supplied by Messrs. Fraser and Chalmers. A is the hydraulic cylinder, with its piston B attached to the piston

rod C. Connection to the force pump is made at the tee piece D, and the escape at E, the water being conducted through brass tubes F and ports cast in the cylinder covers, and controlled by means of the valves 1, 2, 3, and 4. When 1 and 3 are open and 2 and 4 closed, water is pumped in above the piston, and escapes from below it, and the piston moves downward; when 2 and 4 are open and 1 and 3 closed the piston moves upward. To the upper end of the piston rod is screwed the thrust plate G, attached to another thrust plate H by three studs, and between

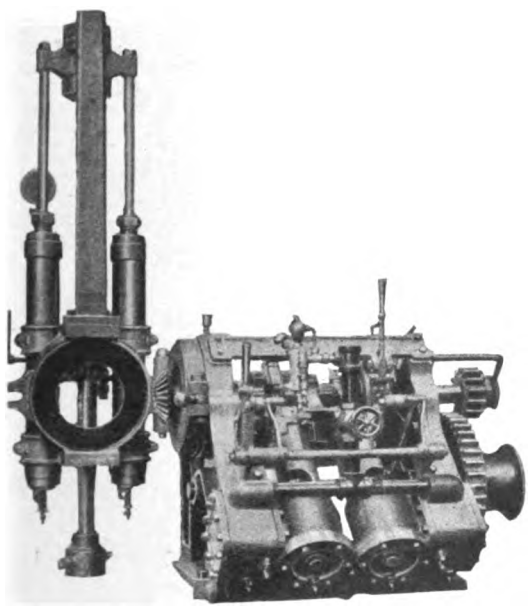

FIG. 3.—AMERICAN DIAMOND BORING MACHINE.

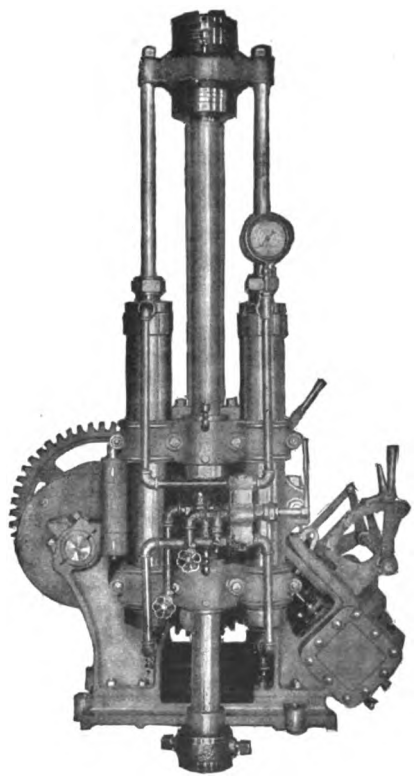

FIG. 4.—PROSPECTING DRILL.

these are two sets of ball bearings, one on each side of the collar I on the drive rod J. This collar transmits the vertical motion of the piston to the drilling bit; for as the piston and rod descend they carry the two thrust plates G and H and the two roller bearings with the collar I between them, which is screwed fast to the rod J and rotates with it, the rod being driven through mitre gearing K. By admitting water under pressure, therefore, either to the top or bottom of the piston, the pressure on the tool may be increased or decreased as required, and the tool may be

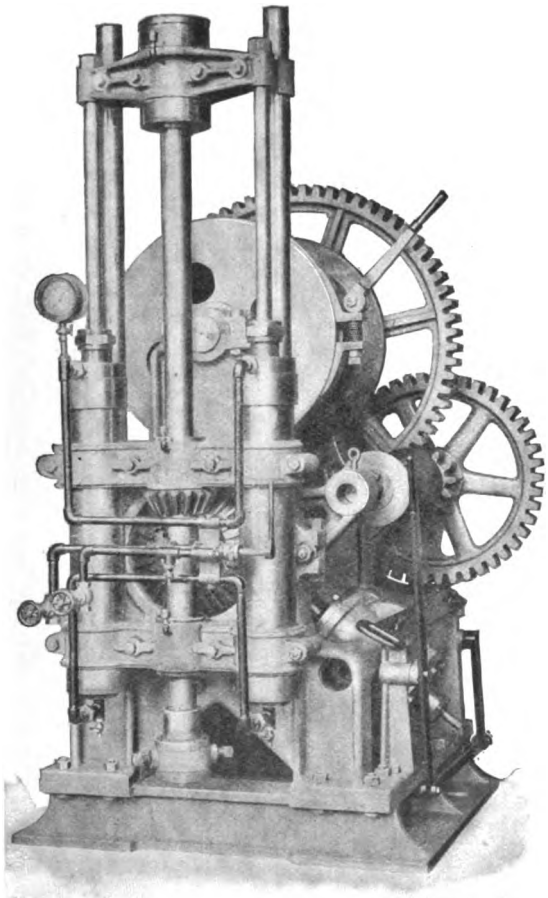

FIG. 5.—PROSPECTING DRILL, FITTED WITH OSCILLATING ENGINES AND HYDRAULIC FEED.

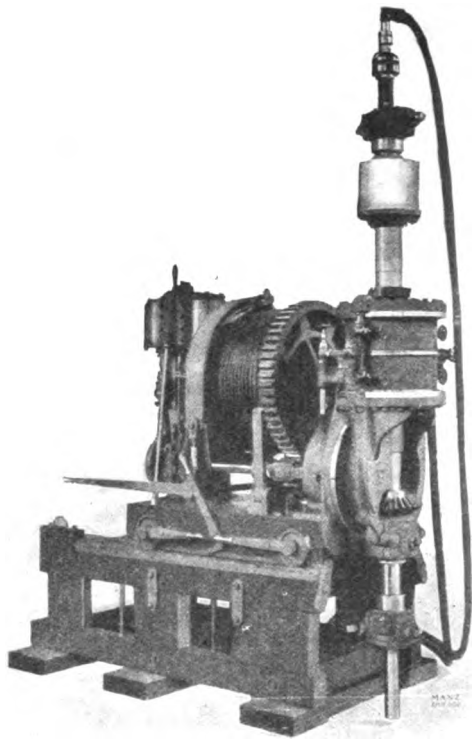

FIG. 6.—DIAMOND BORING MACHINE WITH SINGLE-CYLINDER HYDRAULIC FEED.

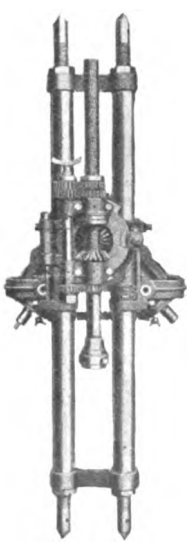

FIG. 7.

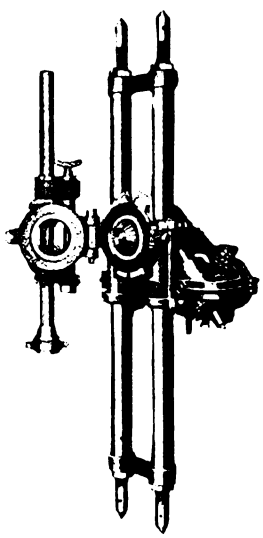

FIG. 8.

POWER-DRIVEN BORING MACHINE FOR UNDERGROUND PURPOSES.

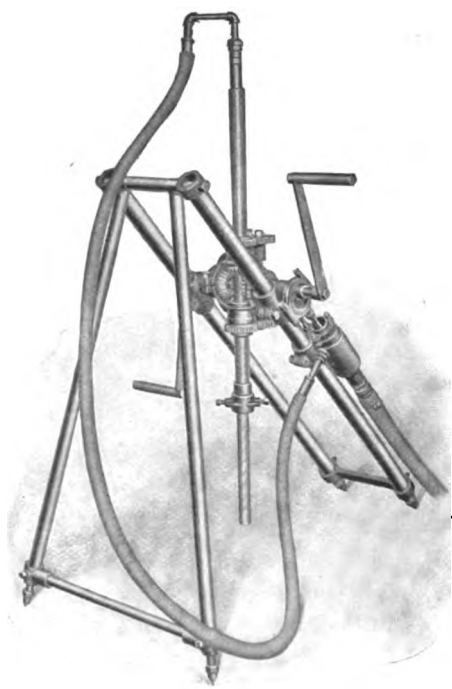

FIG. 9.—HAND-POWER DRILL IN POSITION FOR VERTICAL BORING.

fed forward quite independent of the driving mechanism with any degree of regularity. The hollow drill rods P pass up through the drive rod J, and are held fast by the chuck L, and when the piston reaches the bottom of the cylinder, which is the limit of the feed, the chuck is released, the piston raised and a fresh grip is taken. Pressure gauges are fitted to indicate what amount of pressure is upon the tool.

The American Diamond Boring Company use two cylinders, one on each side

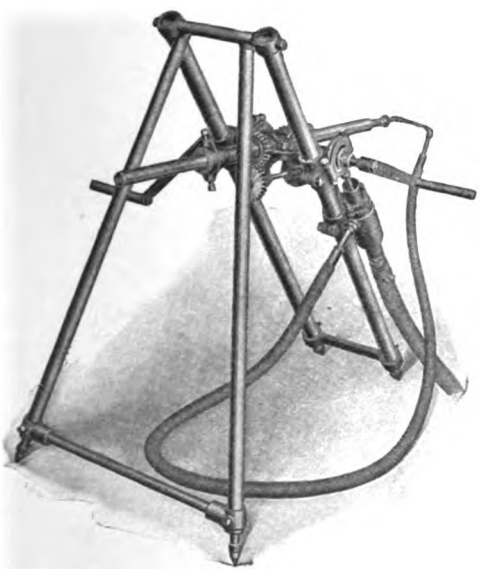

FIG. 10.—HAND-POWER DRILL IN POSITION FOR BORING AT AN ANGLE.

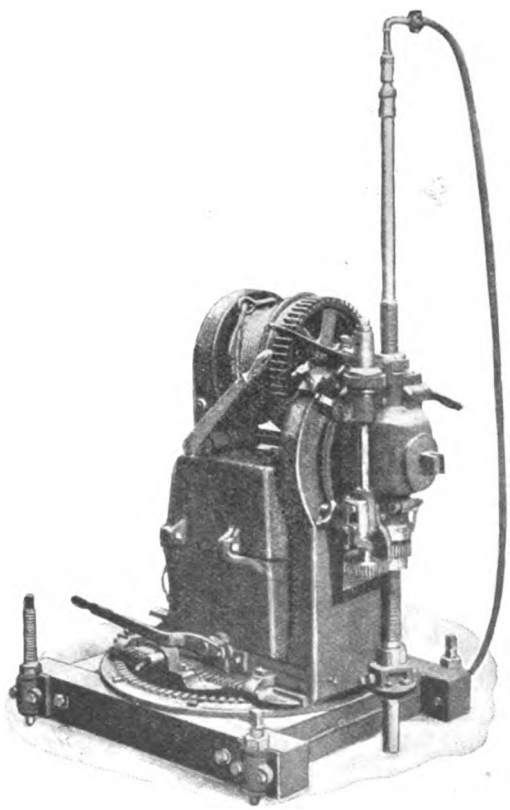

FIG. 11.—ELECTRICALLY-DRIVEN DRILL. Front View.

of the rod. As shown in fig. 16, C is the bevel driving gear attached to end of engine shaft. The bevel-and-sleeve gear B carries a feather engaging with a longitudinal keyway cut the whole length of the spindle A, so that the spindle, while revolved by the gear B, is free to pass upward and downward through it. The lower bearing of the spindle is a plain sleeve, also allowing free passage of the spindle up and down. D D are the hydraulic cylinders, and E E the hydraulic

pistons. The piston rods of these pistons pass through stuffing-boxes at top of cylinders and connect with the hydraulic crosshead F. The spindle A is free to revolve in this crosshead, but is forced up or down by it, according to the pressure on the hydraulic pistons E E. The friction due to the upward or downward thrust is minimised by the roller bearings H H; while the hydraulic cylinders are piped up in such manner that there is no difference in pressure between the two, the pull on the two sides of the crosshead being therefore equalised. A crosshead guide G is

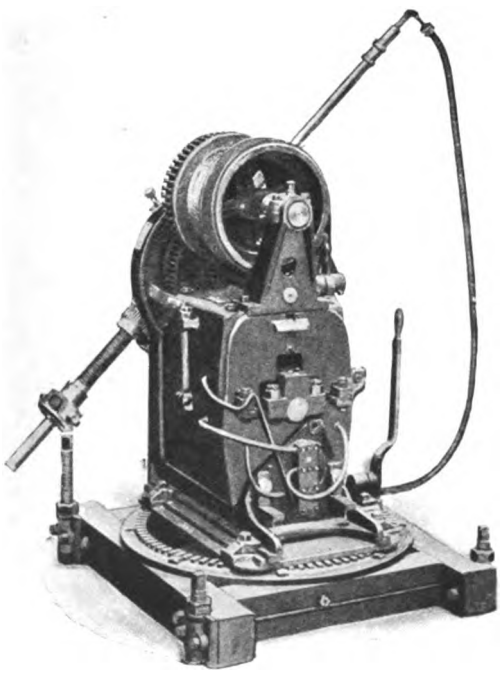

FIG. 12.—ELECTRICALLY-DRIVEN DRILL.
Back View.

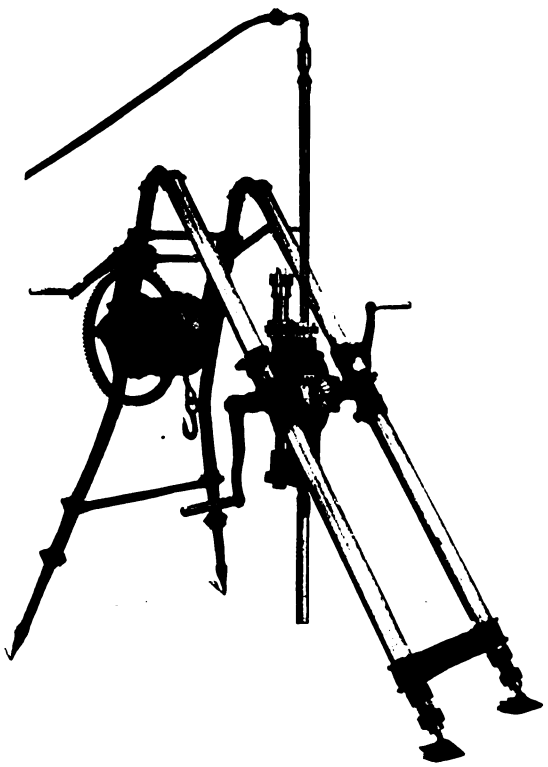

FIG. 13.—HAND-POWER DRILL.

provided. This guide has a dovetail groove in which travels a dovetail projection extending from rear of crosshead F.

Turning now to the system of piping connecting the hydraulic cylinders, J is the supply valve which makes connection with a water hose running from the pressure pump. From J the piping runs to the intake of the four-way valve K, a check valve being also inserted between J and K to guard against back flow of water from any cause. The upper arm of the four-way valve (controlling valve) K is piped to the upper ends of the hydraulic cylinders, as shown, and the lower

arm of valve K to the lower ends of cylinders. The fourth arm, or discharge, is piped to the escape valve N, a drip cock being inserted in the piping between the valve K and the escape valve N. The controlling lever M governs the amount of water passing through K and also decides its direction, whether to the upper ends of cylinders or to the lower ends. P is the hydraulic pressure gauge, to measure the pressure applied to the pistons; R the drill-rod chuck with jaws and set-screws

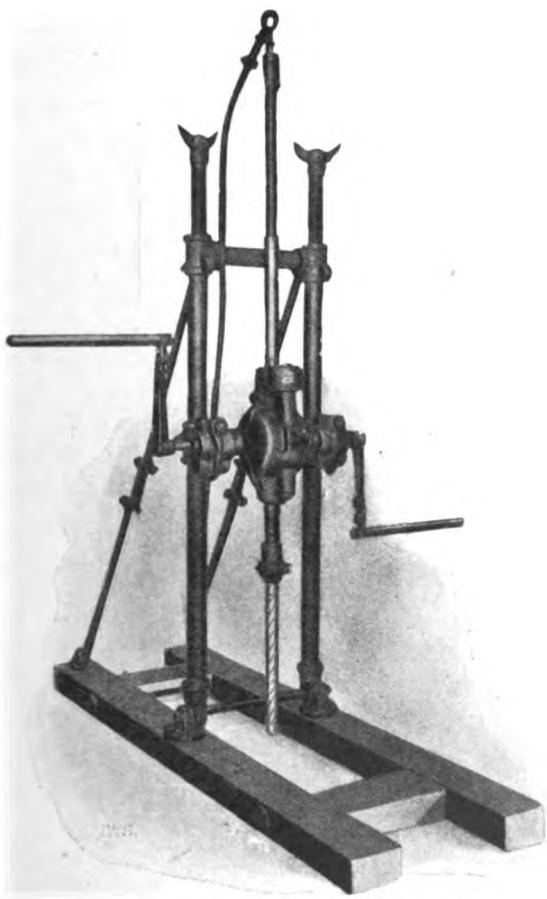

FIG 14.—HAND-POWER DRILL.

FIG. 15.

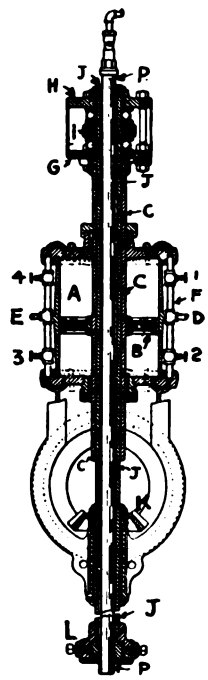

HYDRAULIC FEED ARRANGEMENT (Fraser and Chalmers).

to grip the drill rods, which are passed through the hollow spindle, and S the hinged swivel head, which can be swivelled to bore holes at any angle, and which swings the whole feed out of the way when hoisting and lowering rods.

With the hydraulic feed, the pressure on the bit is determined by the water pressure in the hydraulic cylinders. without regard to the rate of revolution of the

spindle, and the amount of this pressure is always under the complete and instantaneous control of the operator. The controlling key of the system is the four-way valve K, with its lever M. (1.) With lever M turned down into the lower quadrant, the flow of water is from pressure pump valve J to K, through lower arm of K to lower ends of cylinders D D, and from upper ends of cylinders

FIG. 16.

A.—Spindle.
B.—Bevel-and-Sleeve Gear.
C.—Bevel Gear (Driving Gear).
D.D.—Hydraulic Cylinders.
E.E.—Hydraulic Pistons.
F.—Hydraulic Cross-head.
G.—Guide for Hydraulic Cross-head.
H.H.—Roller Bearings.
J.—Supply Valve.
K.—Four-way Valve (Controlling Valve.)
M.—Controlling Lever (of Four-way Valve.)
N.—Escape Valve and Drip-cock.
P.—Pressure Gauge.
R.—Drill Rod Chuck.
S.—Hinged Swivel Head.

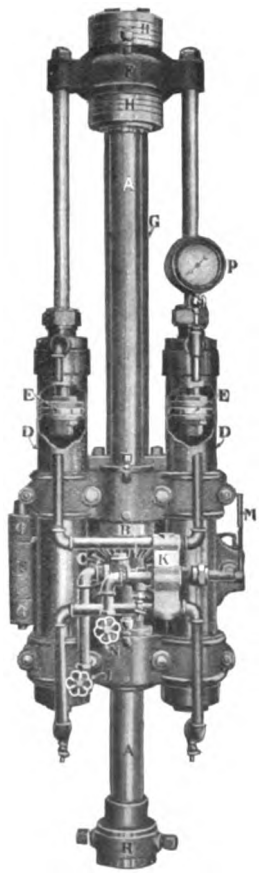

HYDRAULIC FEED ARRANGEMENT.
(American Diamond Boring Co.)

FIG. 17.

DIFFERENTIAL OR SCREW FEED.

a.—Spindle or Screw Shaft.
bb.—Bevel-and-Sleeve Gear.
c.—Bevel Gear (Driving Gear).
d.—Countershaft Gear (Release Gear.)
e.—Countershaft.
f.—Friction Nut.
gG } Feed Gears.
hH }
m.—Feed-Gear Key.
nn.—Feed Nut and Collar.
p.—Ball Bearing.
r.—Drill-rod Chuck.
s.—Hinged Swivel Head.

D D to upper arm of K, thence through escape valve N or its drip cock, either to waste or to suction supply of pump. (2.) With lever M in horizontal position, flow of water is shut off. The same is true of the vertical positions. (3.) With lever M in upper quadrant, flow of water is as before from pump through valve J to K, then through upper of K to upper ends of cylinders D D, and from lower ends of

cylinders to lower arm of K, thence through escape valve N, or its drip cock, as before.

It will thus be seen that the varying positions of the lever M govern not only the rate of feed (by controlling the pressure), but also provide for an instantaneous method of reversal, when spindle is to be run up for a fresh grip on the rods. The 45 deg. position in either quadrant gives a full opening.

The cylinders are always kept practically full of water on both sides of the piston when in operation. When feeding forward in actual boring, with pressure on upper sides of piston, the water from lower sides of pistons is allowed to escape in a small jet through the drip cock situated between outlet of K and escape valve N, valve N being closed. Where a quicker and more free escape is desired (as in running back quickly after a run forward) valve N is opened instead of the drip cock. Valve N could in the same way be used for the escape when running forward, but the drip cock is used for this purpose as a rule when boring, as the rate of flow desired for the escape is, in this case, comparatively small, and it is desirable to have the escape jet always under the operator's eye. A drip hose is connected to valve N to lead off the escape water, and the drip cock, by means of a small funnel and elbow, can be discharged into the same hose.

In addition to the advantage of perfect and instantaneous control afforded the operator, the hydraulic feed is also semi-automatic, the rate of progression varying under the same pressure according to the hardness of the rock. Also the indications of the pressure gauge, taken in connection with the rate of penetration of the drill, afford the operator a valuable means of judging of the quality of the material the bit is boring through, thus enabling him to vary his pressure to suit the material, and always maintain the highest speed consistent with safety. The water being allowed to escape only in proportion as the pistons advance, there is always a perfect buffer under the pistons should the drill run into soft spots or crevices, and it will also be apparent that in very deep borings, where the weight of rods alone may be greater than the desired pressure on the bit, the feed can be used as a counterbalance, pressure enough being maintained on the lower sides of the pistons to relieve part of the weight.

The friction feed is also most interesting, and the arrangement is clearly shown, as applied to the American Diamond Rock Drill Company's machines, in fig. 17. This, which is more suitable for the smaller machines, consists of a system of differential gearing driven by friction, the amount of which is controlled by compressing a spring, or other means.

As is shown in fig. 17, *c* is the bevel driving gear attached to end of engine shaft. The bevel-and-sleeve gear *b b* is a double gear, feathered to a longitudinal keyway cut the whole length of the spindle *a*, and having its upper gear meshing

with the driving gear c, and its lower (spur) gear meshing with the gear d at the lower end of countershaft. This countershaft gear d is a frictional gear, coned on the inside, and tightened to the countershaft e by means of a coned ring and the friction nut f. Of the feed gears g G and h H, only one pair is driving at any one time. When the feed-gear key m is pulled up as shown in cut, the gear g is keyed to countershaft, and the gear h runs idle. When m is pushed down to the lowest

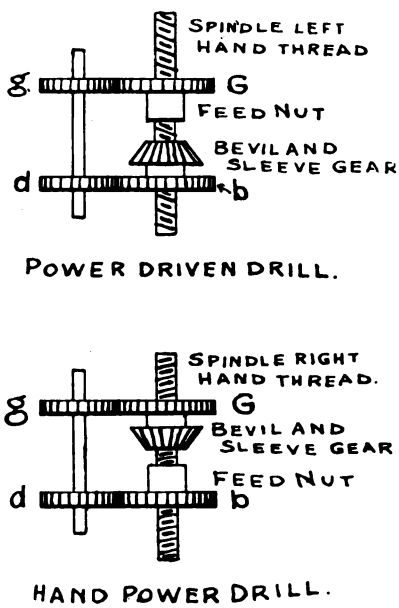

FIG. 17A.—SHOWING DIFFERENCE BETWEEN HAND AND POWER DRIVEN DRILLS.

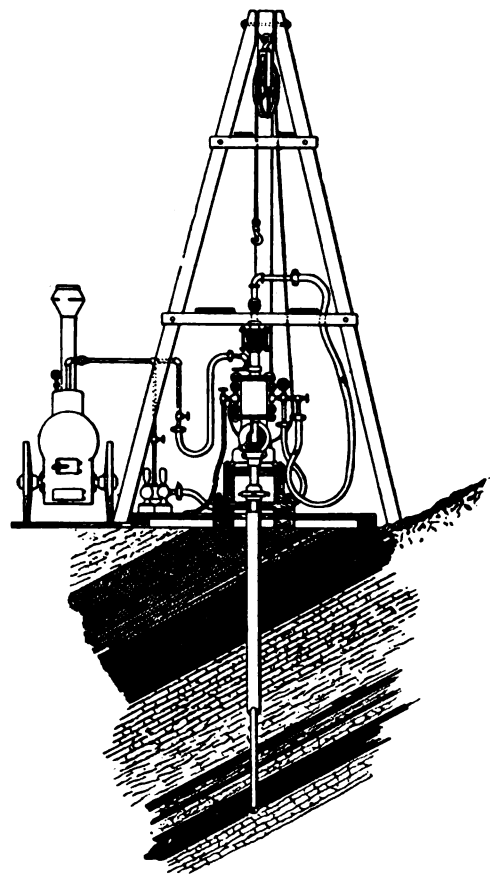

FIG. 18.—GENERAL ARRANGEMENT OF A PLANT FOR DIAMOND DRILL.

position, gear h is keyed to countershaft and gear g runs idle. When m is in mid position, both g and h run idle. The gears G and H are keyed to the feed nut $n\,n$, this feed nut being threaded through its whole length with a thread engaging with that cut on the spindle; p is a ball or roller thrust bearing, to take the upward thrust of the rods when boring, r the drill-rod chuck, with jaws and set-screws to

grip the drill rods, which are passed through the hollow spindle, and *s* the hinged swivel head, which can be swivelled to bore holes at any angle, and which swing the whole feed out of the way in order to clear the hole when hoisting and lowering rods.

The operation of the differential feed is based on the difference in rate of revolution of the spindle *a* and the feed nut *n n*, and can be best explained by taking a specific instance. On the No. 10 drill, fig. 17, the thread of spindle *a* and of the feed nut *n n* is a left-hand thread of four threads to the inch. The lower (spur) gear of the sleeve gear *b b* has twenty-four teeth, and the countershaft gear *d* twenty-five teeth. The thread on the spindle being left-handed, and the spindle, when boring, being turned in a right-hand direction, the feed nut, in order to accomplish a forward feed of the spindle, must turn slightly faster than the spindle. Considering, now, the gears *g* G as being in train, *g* being keyed to the countershaft by key *m*, and G being keyed to the feed nut *n n*, the rate of feed forward of the spindle will depend upon the relative number of teeth in *g* and G.

If x = number of revolutions of spindle required to feed spindle forward 1 in.,
a = number of threads per inch (left-hand) on spindle and feed nut,
b = number of teeth on lower (spur) gear of sleeve gear,
d = number of teeth on countershaft gear d,
g = ,, ,, gear g,
G = ,, ,, gear G,

the general formula is –

$$x = \frac{a}{\frac{b\,g}{d\,\mathrm{G}} - 1},$$

which for the specific case above resolves itself into

$$x = \frac{4}{\frac{24\,g}{25\,\mathrm{G}} - 1}$$

With g having 26 teeth and G 24 teeth, x = 100,
,, g ,, 38 ,, G 36 ,, x = 300,
,, g ,, 22 ,, G 21 ,, x = 700,
,, g ,, 23 ,, G 22 ,, x = 1,100,

and so on through a wide range of feeds, in each case x meaning the number of revolutions of spindle required to speed spindle forward 1 inch.

Of course in the above formula *h* and H may be substituted for *g* and G. Thus in the arrangement shown, if *g* has thirty-eight teeth, G thirty-six teeth, while *h* has twenty-two teeth, and H twenty-one teeth, the drill will feed forward 1 in. per 300 revolutions when feed key *m* engages with gear *g*, and 1 in. per 700 revolutions when feed key *m* engages with gear *h*. The feed gears in any case can be propor-

tioned to fit the rock likely to be encountered, and extra sets for various rates of feed are provided, which can in a very few moments be placed upon the drill in exchange for the first sets, if these prove either too fast or too slow.

To run the spindle back for a new run after it has been fed forward its full length. the friction nut f is loosened, allowing the countershaft gear d to run loose. Then holding the countershaft e from revolving, either by inserting a pin in the hole provided for that purpose, or by a hand-hole on the top of the feed key m, the spindle is revolved by means of the engine in the same direction (right-handed) as when boring. The meshing of the feed gears will then prevent the feed nut $n\,n$ from revolving, and the thread on spindle and feed nut being left-handed, the spindle will run back through the feed nut at a rate proportioned to the full pitch of the screw. Another way of running back is, without loosening the friction nut, to place the feed key m in the mid position, allowing both g and h gears to run loose. This permits the feed nut $n\,n$ to lag to an extent determined by friction, or it may be held from revolving by a spanner-wrench grip on G or H.

It should be noted that the friction connection between gear d and the countershaft makes this feed a combination of a friction and a positive feed, as it allows of a slipping should any sudden and unusual assistance be encountered, thus furnishing an element of safety and insurance against damage of drill points in uneven ground.

In the hand drill, however, the arrangement is slightly different, the bevel wheel being above the feed nut, the difference being shown in fig. 17A, the feed gear G being in this case on the bevel-and-sleeve gear, and the thread on spindle right hand. With this arrangement the spindle must revolve faster than the feed nut, and the formula becomes :—

$$x = \frac{a}{1 - \frac{d\,G}{b\,g}}$$

Or with the hand drill if :—

a = spindle thread = 6 threads per inch, right hand,
b = number of teeth on gear of feed nut = 24,
d = number of teeth on lower gear of countershaft = 25,
x = number of teeth on right hand, number of revolutions required to feed forward 1 in.

Then—

$$x = \frac{6}{1 - \frac{25\,G}{24\,g}}$$

If g = 30, and G = 27, x = 96 (called 100 feed),
If g = 34, and G = 32, x = 306 (called 300 feed), and so on.

To run back the spindle on the hand drill, the key which attaches the bevel-and-sleeve gear to the keyway of spindle is pulled out, thus allowing the gear to

revolve about the spindle. The cranks are revolved in the same direction as when boring, and the spindle is held in such a manner as to prevent it from revolving. By means of G, *g*, *d*, *b*, the feed nut will then revolve in a right-handed direction, and the spindle being prevented from revolving will run rapidly back through the feed nut.

Fig. 18 shows a general arrangement of the plant for a diamond rock drill, showing portable boiler, steam pump and derrick, or shear legs for withdrawing the rods.

In putting down boreholes it is often necessary to put in a length of tube to prevent the loose and soft strata at the top from filling up the hole, and fig. 19 shows a section of a borehole which shows the large top tube fitted at the bottom with a driving shoe O, which enables the tube to be driven through soft measures, and in order to do this the top of the tube is supplied with a head screwed into the pipe and upon which the blows are delivered. This tube must of course be large enough to admit smaller tubes to be put in later if they become necessary, such a one M being shown in the figure; P is the hollow bore rod; W, core grip; X, tool; U, core barrel; and V, the shell containing the core grip. The arrows show the direction of the water.

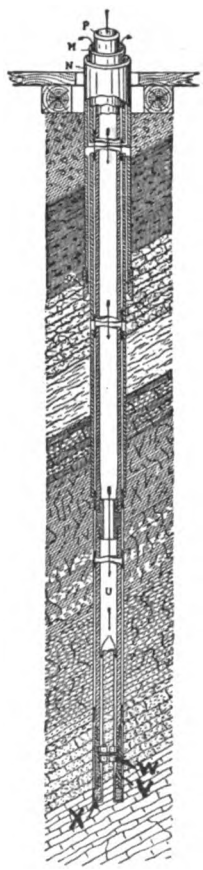

FIG. 19.—SECTION OF A BOREHOLE.

With rope boring rigid rods are dispensed with, and a tool is suspended from a rope, which may be quickly raised and lowered, thus saving the time expended in screwing and unscrewing the bore rods.

Messrs. Mather and Platt have been very successful in putting down large and deep holes with their system, and fig. 20 shows a general view of their flat-rope boring machine, in which the tool is seen suspended from the end of the rope, and the sludge pump is seen on the right suspended from the bracket at the top of the frame. The special feature is the boring tool, which was introduced and patented by Messrs. Mather and Platt in 1855, and is shown in fig. 21. From this it will be seen the tool consists of a heavy wrought iron bar, to the bottom of which is fixed a steel block carrying inserted chisels or cutters, readily removable for sharpening. Above this block are secured two guide blocks, which keep the tool vertical, and above the upper guide block is the device for automatically rotating the cutters. Two collars are fixed to the bar, in which are cut deep ratchet teeth set exactly in line, and between

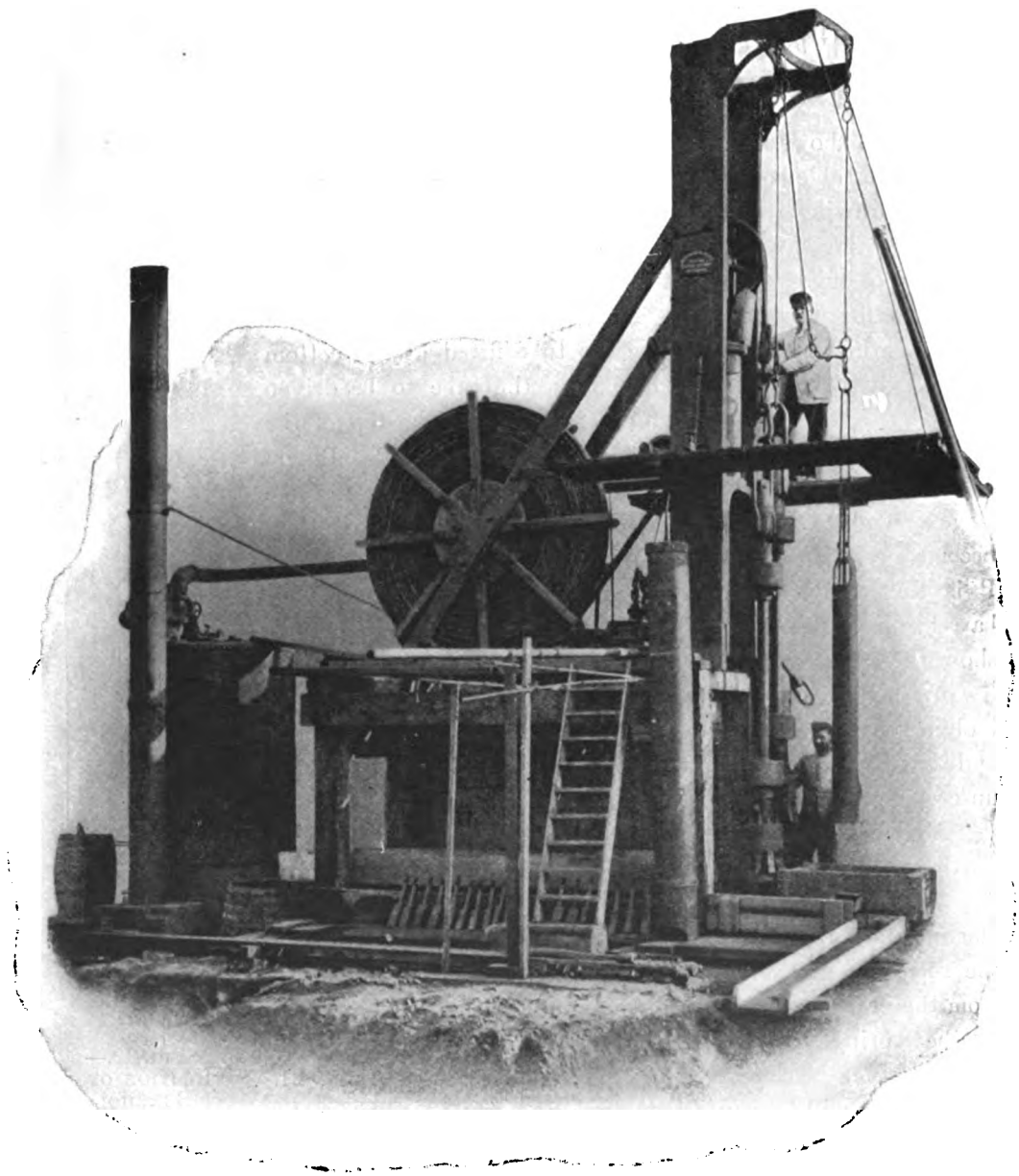

FIG. 20.—FLAT ROPE BORING MACHINE.

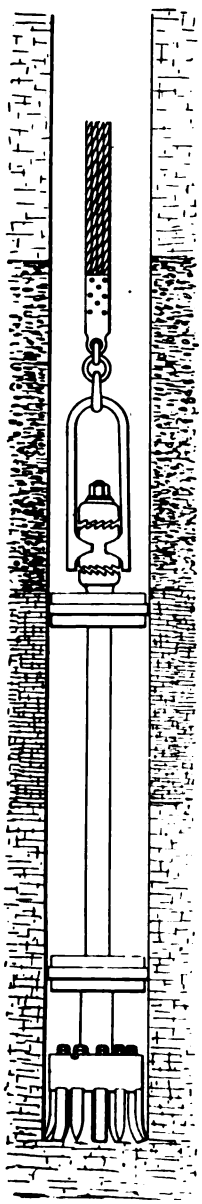

FIG. 21.—BORING TOOL.

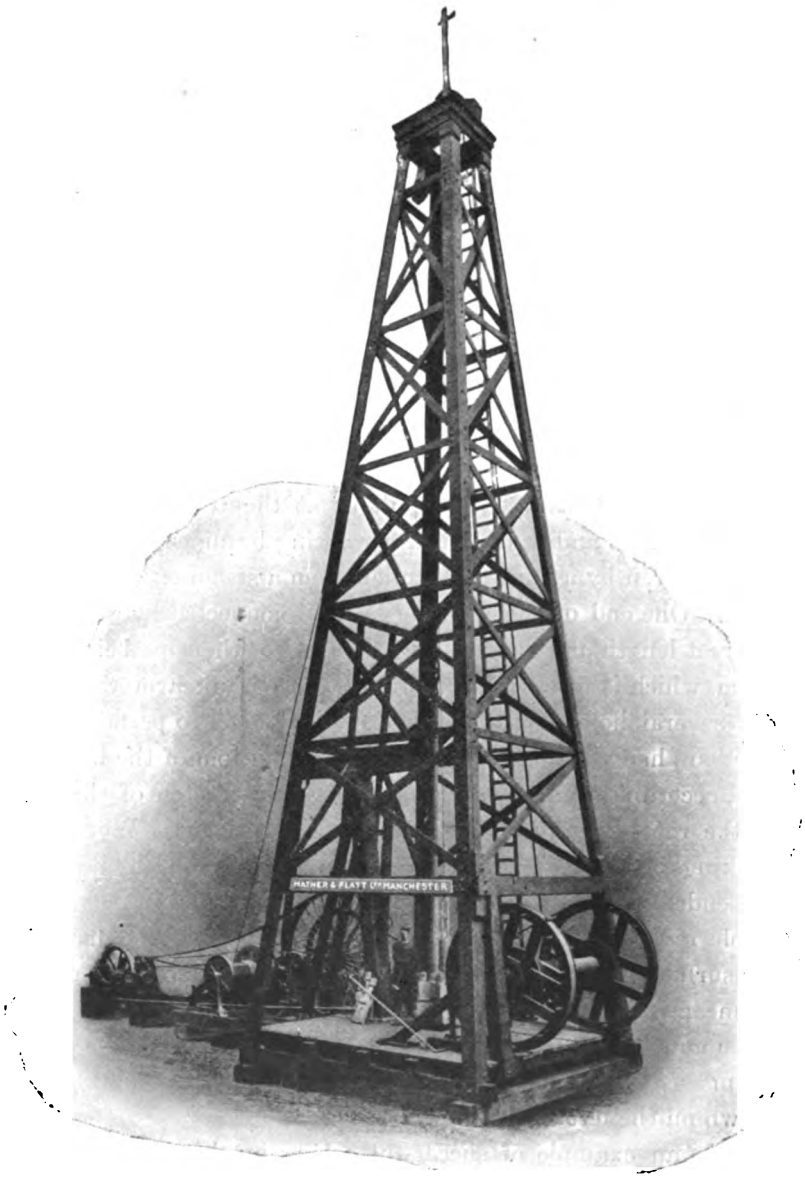

FIG. 22.—ROUND ROPE BORING MACHINE.

these collars is the sliding bush secured to the rope by a stirrup, and which has corresponding ratchet teeth facing the teeth on the collars, but instead of being in line are set in the top face, half a tooth in advance of the lower face. When the tool is raised by the rope the top set of teeth are engaged, but when the boring bar falls and strikes a blow, the lifting bush and rope still descending, disengages from the top set of teeth and engages with the bottom set, receiving in consequence a twist of half a tooth. On the bar being again raised, the bush disengages with the bottom set, and engages with the top set, and in doing so again receives a twist of half a tooth. At every blow, therefore, the tool is automatically turned round a distance equal to the pitch of the teeth. The percussive action to the tool is given by the small steam cylinder between the two uprights, rapidly raising and lowering the pulley, the rope being clamped on the drum side. The *débris* is raised by the sludge pump.

Latterly Messrs. Mather and Platt have introduced a round-rope boring machine, which is shown in fig. 22 This consists of a timber derrick, about 60 ft. in height, supporting guide pulleys at the top, and at one side is arranged a winding drum and at the other a walking beam, actuated by a connecting rod and crank driven by a large belt pulley from a steam engine, shown on the left of the view. One end of the walking beam is connected by a round rope to a boring bar of great length and weight, the other end of the rope being coiled on the winding drum, which is fitted with a brake. The crank arm working the walking beam has several holes for the reception of the pin to permit several lengths of stroke. The bars hang at some distance from the bottom of the hole, varying from 6 in. to 3 ft., according to the length and consequent stretch of the rope, and the elasticity of the rope permits of a rapid rate of working. When motion is given to the walking beam, the boring tool rises and falls with a periodic motion, and the suspended weight stretches the rope until the cutters strike the bottom, when the whole rapidly rebounds. The bar is rotated by the borer twisting the rope at the surface, and at the same time gradually feeds out the rope as the hole deepens, by means of a long screw and nut. The boring tool is withdrawn by the winding drum and engine. The *débris* is brought to the surface, as in the flat-rope system, by means of a sludge pump, this being raised and lowered by a winding drum shown on the left of the view.

As an example of successful boring by this system, Messrs. Mather and Platt put down two boreholes in Cheshire, each 33 in. in diameter at the top and 15½ in. in diameter at the bottom, the deeper hole being 903 ft. in depth, and the time occupied for the whole boring from start to finish being only 110 working days, the average rate of boring being at the rate of 8·2 ft. per day.

Hand boring, however, is the system most generally employed for ordinary colliery purposes, the arrangement being simple and the tools easily kept in repair by the colliery mechanics, and though slower, and does not give such good results as the diamond drill, for the reasons above stated it will likely continue to be the system generally adopted. There is no difficulty with hand boring up to 100 fathoms, and up to this depth will also probably compare very favourably in point of cost with other systems.

Figs. 23 and 24 show two views of a general arrangement of plant for down-over boring, comprising a wood tripod or shear legs about 24 ft. in height, each leg being about 6 in. in diameter at the bottom and 4 in. at the top, the top being hooped where the bolt passes through to prevent splitting; balancing beam and supporting frame for giving motion to the bore rods; hand winch attached to two

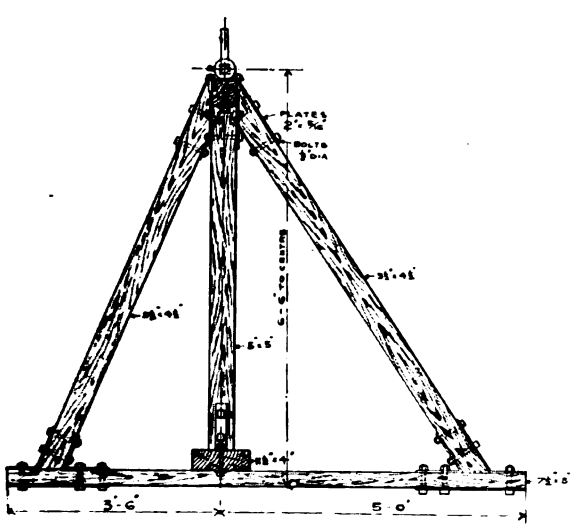

Fig. 25.

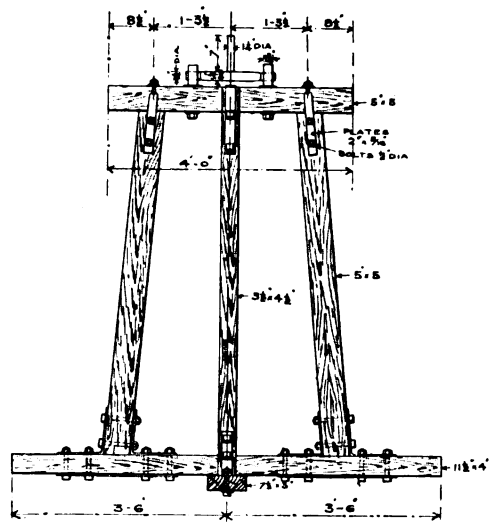

Fig. 26.

Details of the Balancing Beam.

of the legs for raising and lowering rods; and a frame containing a drum for rapidly raising and lowering the sludge pump by means of a small steel flexible rope. Light wood sheds are erected over the winch and end of balancing beam to protect the workmen from inclement weather. Fig. 24A is from a photograph of the plant in operation. Figs. 25 and 26 and fig. 27 are details of the balancing beam and supporting frame respectively. The beam is made heavy enough to balance the weight of the rods, the position of the fulcrum being altered by moving the supporting frame nearer the hole as it deepens. In working, the assistants stand on the platform shown in fig. 24A and pull down the beam, thus raising the rods,

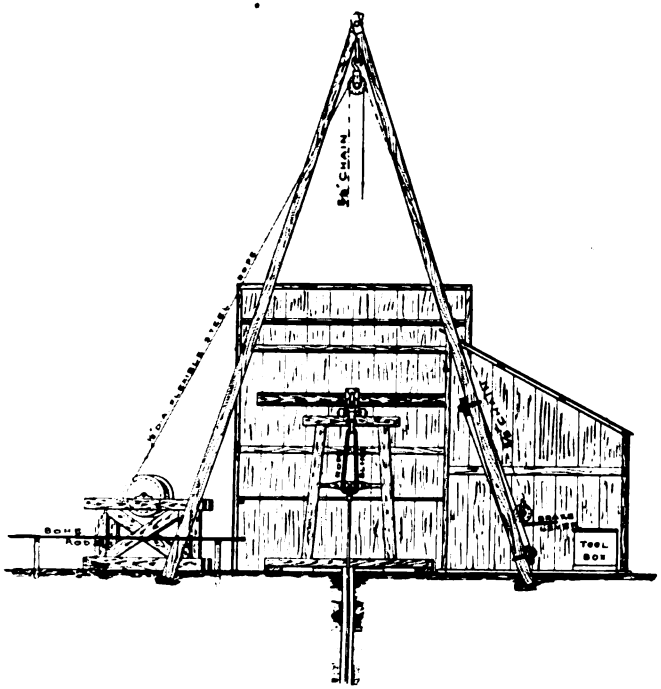

Fig. 23.

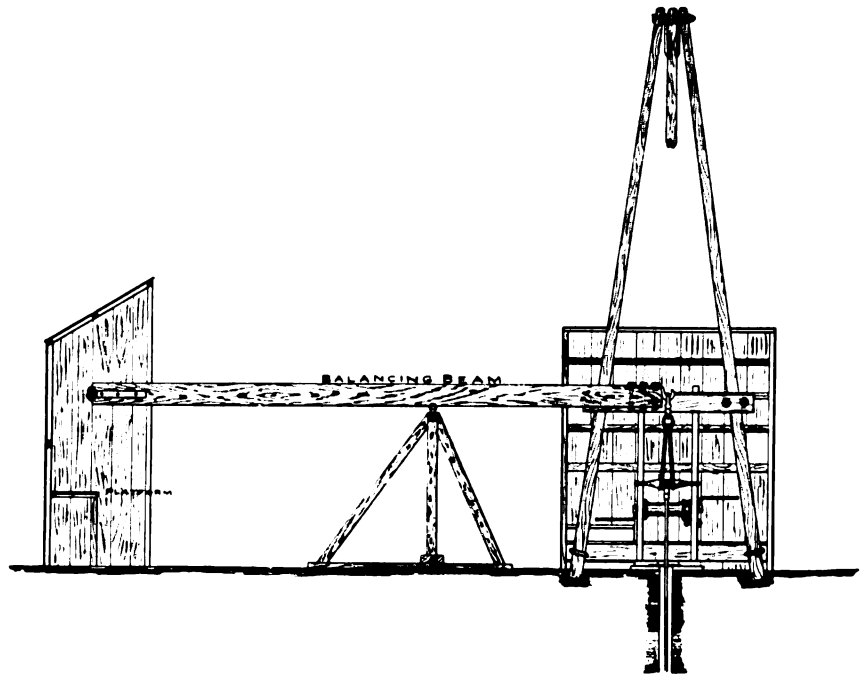

Fig. 24.

General Arrangement of Plant for Down-over Boring.

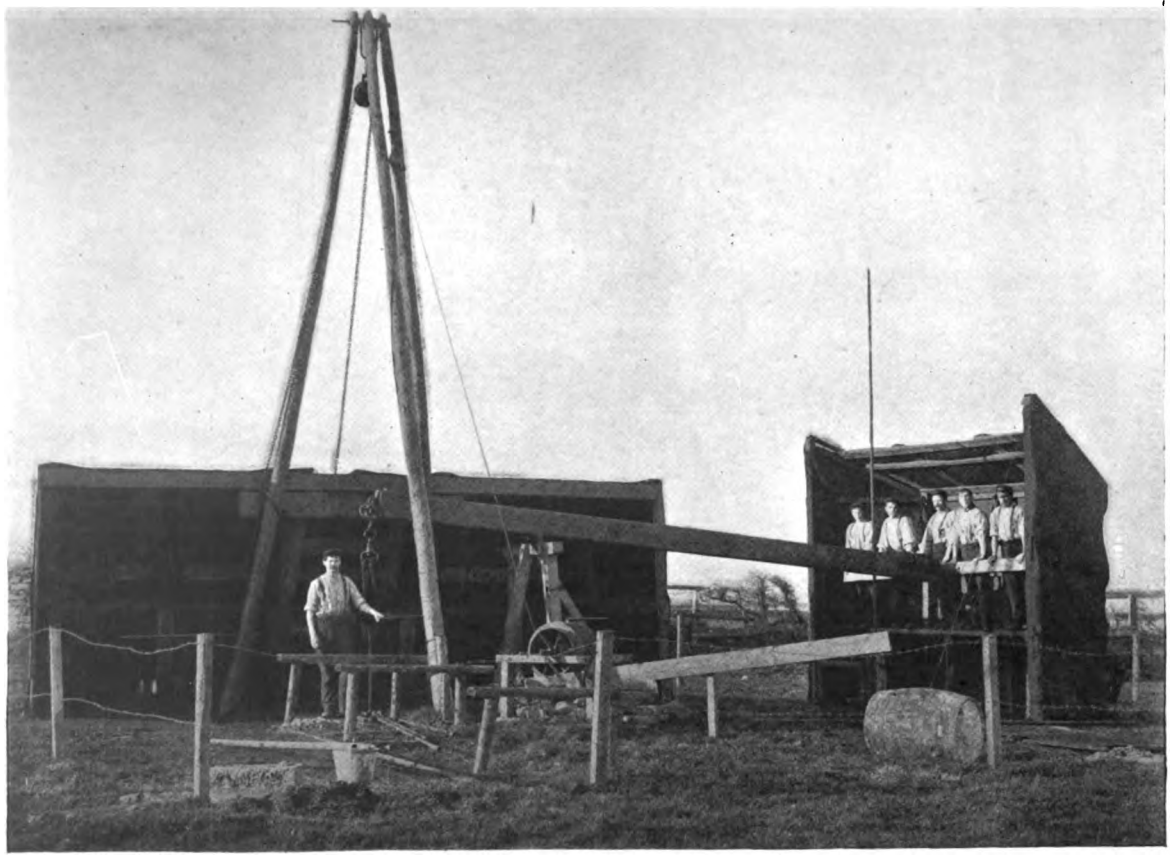

FIG. 24A.—PLANT FOR DOWN-OVER BORING IN OPERATION.

which are then allowed to fall, the force of the blow depending upon the balance, and height to which they are lifted. The connection between the beam and rods is not rigid, but made by a rope sling passing through a swivel and under the brace head, which allows the beam to continue descending after the blow has been struck. Each time the rods are lifted the borer slightly turns the rods by means of the brace head, so that the chisel does not always strike the same place. Fig. 28 shows the hand winch for raising and lowering the rods. It is fitted with a powerful brake for lowering, and long handles to enable two or more men to exert their force upon each when raising the rods, the leverage being short in order to wind quickly. Figs. 29 and 30 show the drum and frame for raising and lowering the sludge pump, being fitted with a band brake for the latter purpose.

In order to reduce the weight of the bore rods, they may be made of tubing with solid ends welded in as shown in fig. 31, and in order to avoid joints which are a source of weakness, each rod is 18 ft. in length, one length being handled at a time when withdrawing from and returning them to the hole.

Fig. 32 shows the sludge pump made from tubing, the valve portion being made separately and fitted to the end of the tube by screwing or riveting. The length of the pump may be anything convenient, but of course as large in diameter as possible, and varies from 3 ft. to 12 ft. in length. Fig. 33 shows a serrated tool useful for cutting through coalseams or soft measures. Fig. 34 shows the chisel, A being for down-over boring, and B being for up-over boring. There are, of

FIG. 29.

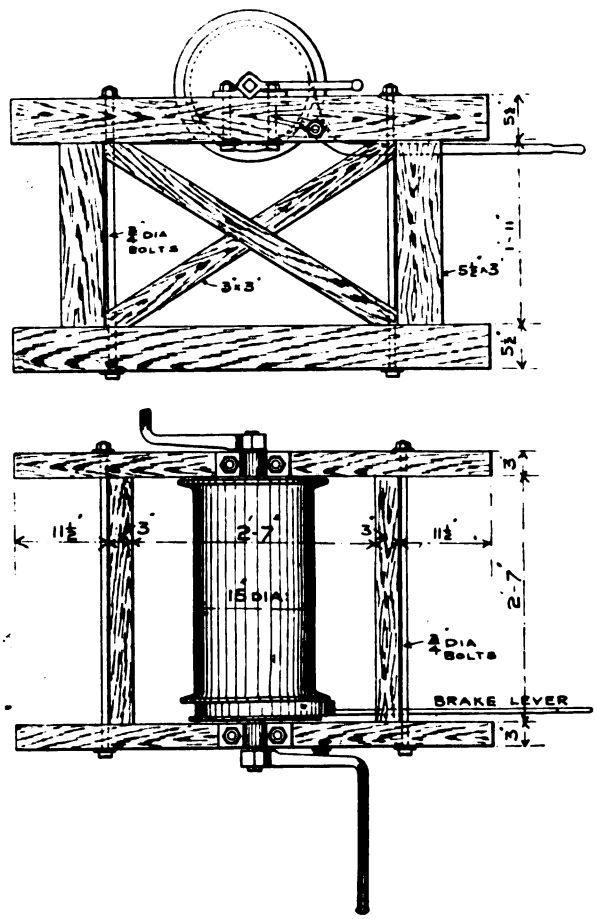

FIG. 30.
DRUM AND FRAME FOR RAISING AND LOWERING THE SLUDGE PUMP.

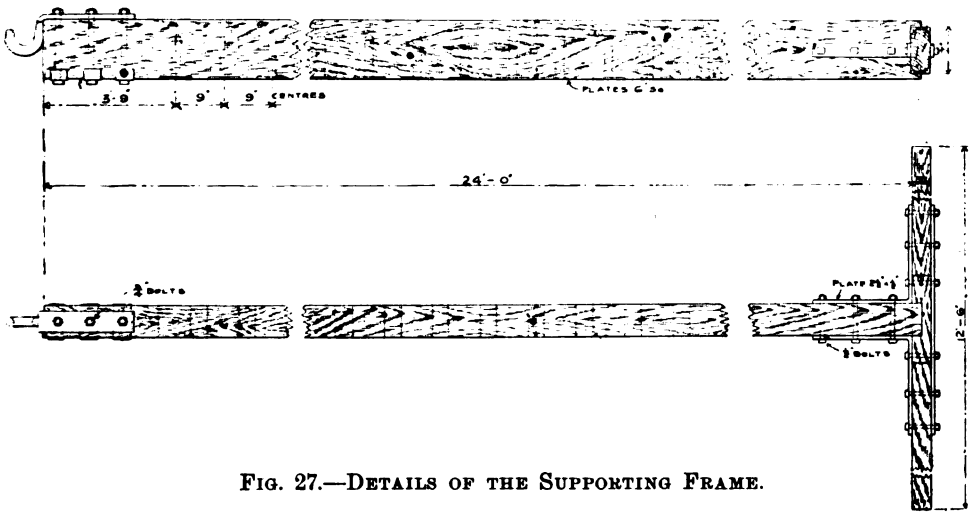

FIG. 27.—DETAILS OF THE SUPPORTING FRAME.

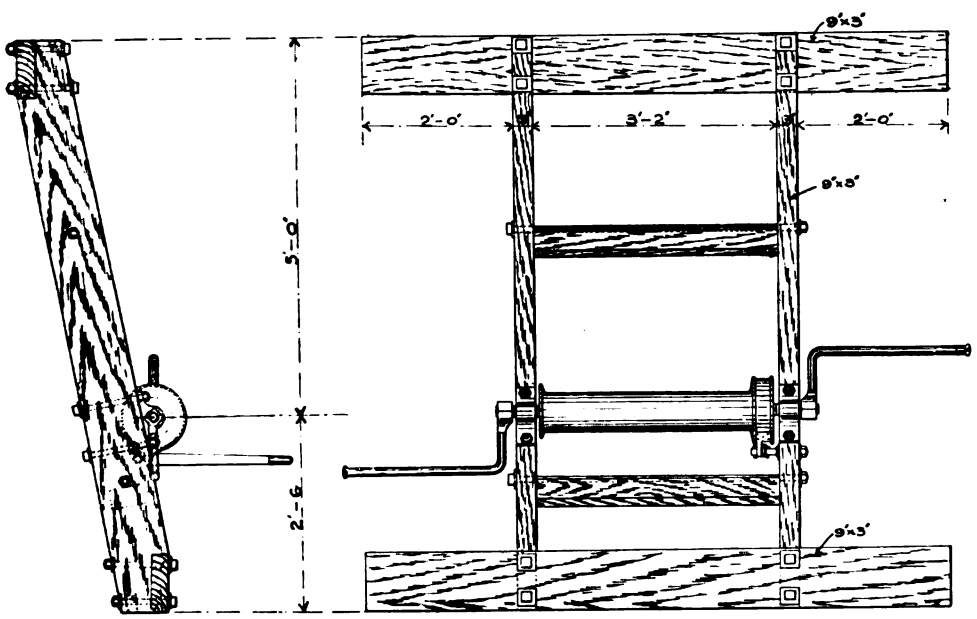

FIG. 28.--HAND WINCH FOR RAISING AND LOWERING THE RODS.

course, many different forms of chisels, depending upon the nature of the rock, that shown being the simplest and easiest kept in repair. Other forms are the X, ✚, ⊢ and flat bit. Fig. 35 shows a tool for enlarging a borehole, the guide pin being about 2 ft. in length and made rather less in diameter than the smaller hole.

It is often necessary underground to bore holes up over, and figs. 36 and 37

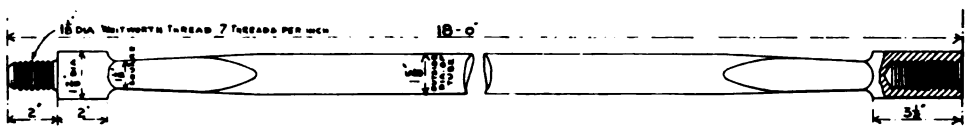

FIG. 31.—BORE RODS OF TUBING WITH SOLID ENDS.

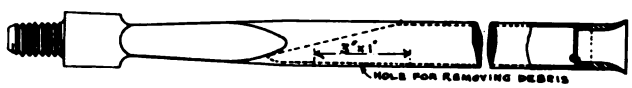

FIG. 32.—SLUDGE PUMP MADE FROM TUBING.

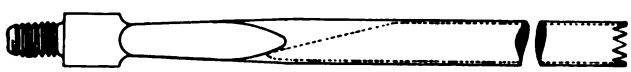

FIG. 33.—SERRATED TOOL FOR SOFT MEASURES.

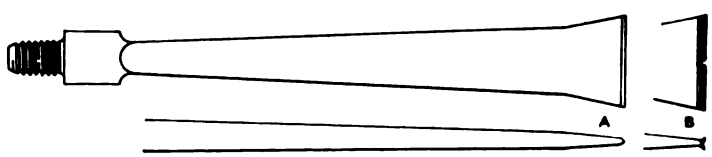

FIG. 34.—THE CHISEL.

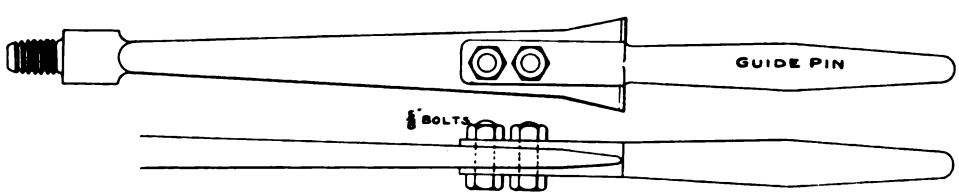

FIG. 35.—TOOL FOR ENLARGING A BOREHOLE.

show two views of an arrangement for hand boring, comprising a platform and frame balance lever and guide frame, and hand winch, principally made from 9 × 3 inch and 11 × 3 inch deals, and has the advantage of being cheap and easily transported. The rods, fig. 38, are 6 ft. in length, and a rotary motion is

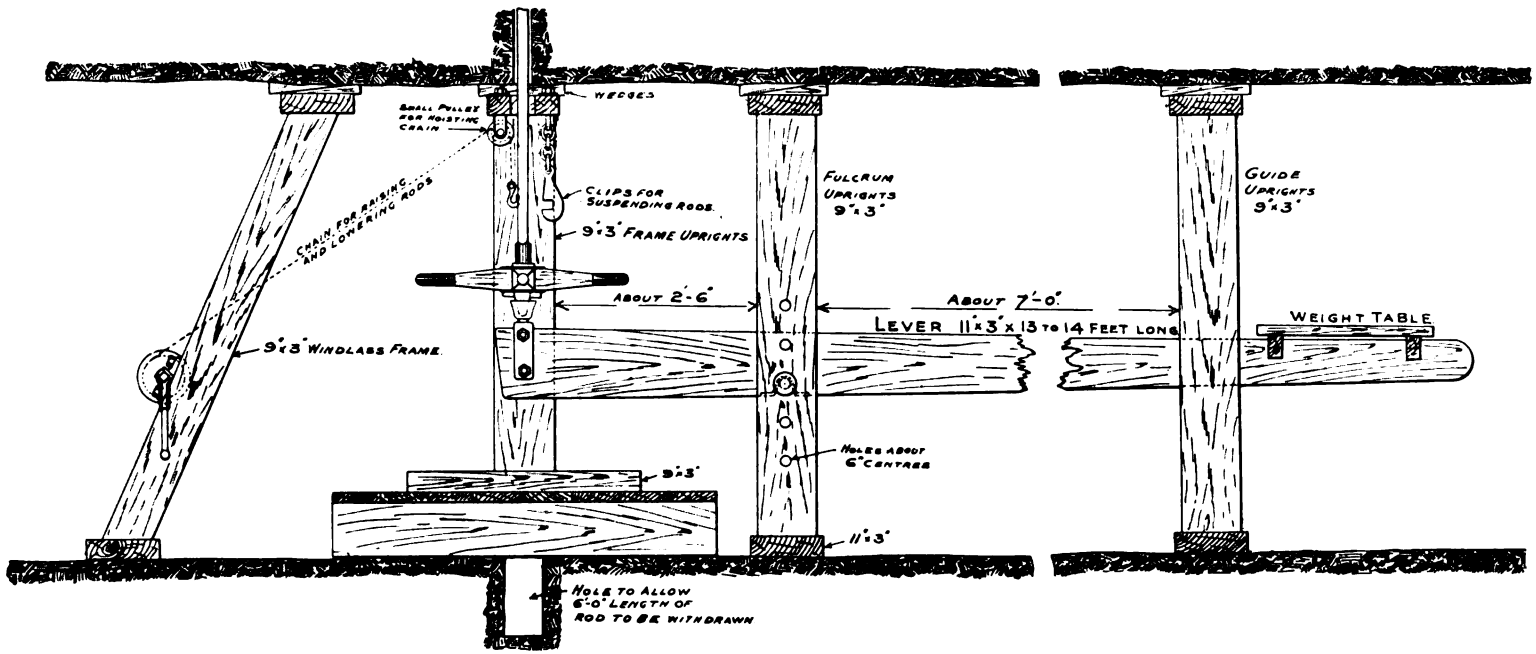

FIG. 36.—AN ARRANGEMENT FOR HAND BORING.

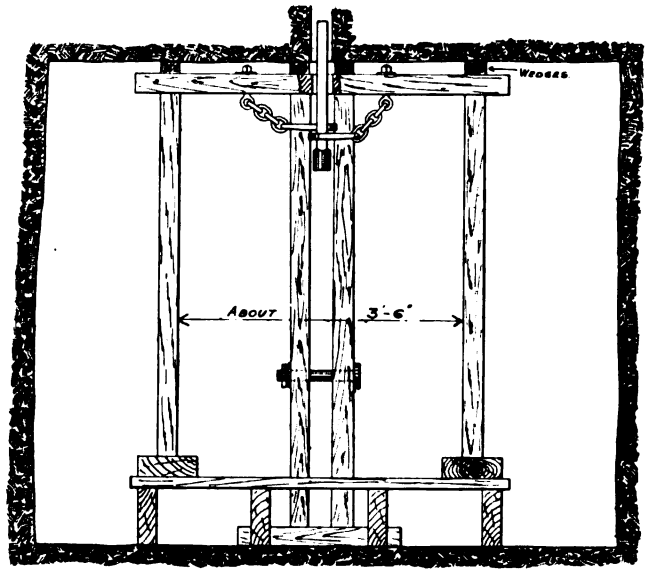

FIG. 37.—AN ARRANGEMENT FOR HAND BORING.

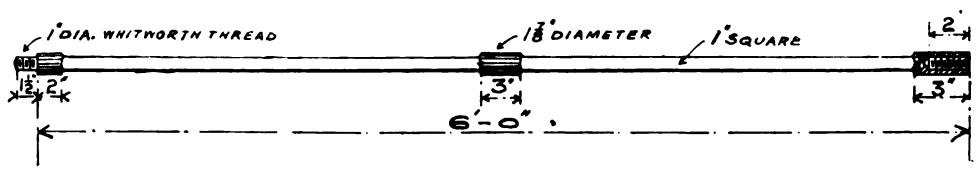

FIG. 38.—THE RODS.

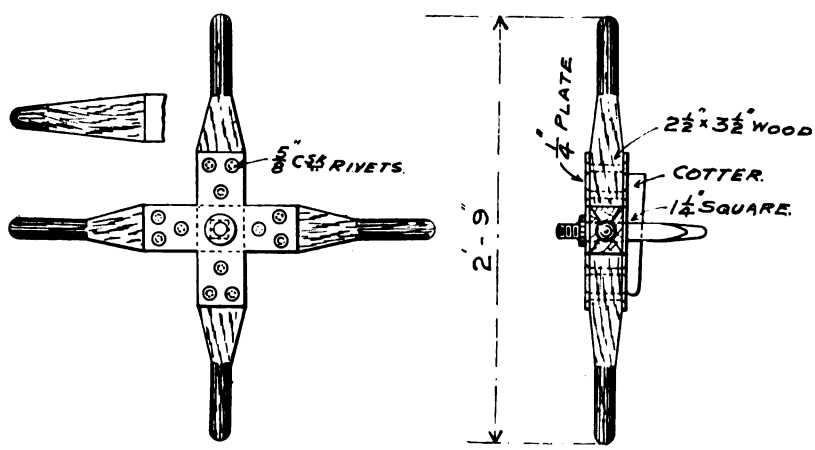

FIG. 39.—HAND BRACE.

given to the tool by means of the hand brace, fig. 39, the weight of the rods and pressure upon the tool being balanced and adjusted by placing weights upon the weight table at the end of the balancing lever. As the rods go up, the fulcrum of the lever is raised by means of the holes and pin in the fulcrum frame, until the limit of height is reached, and it becomes necessary to add another length of rod.

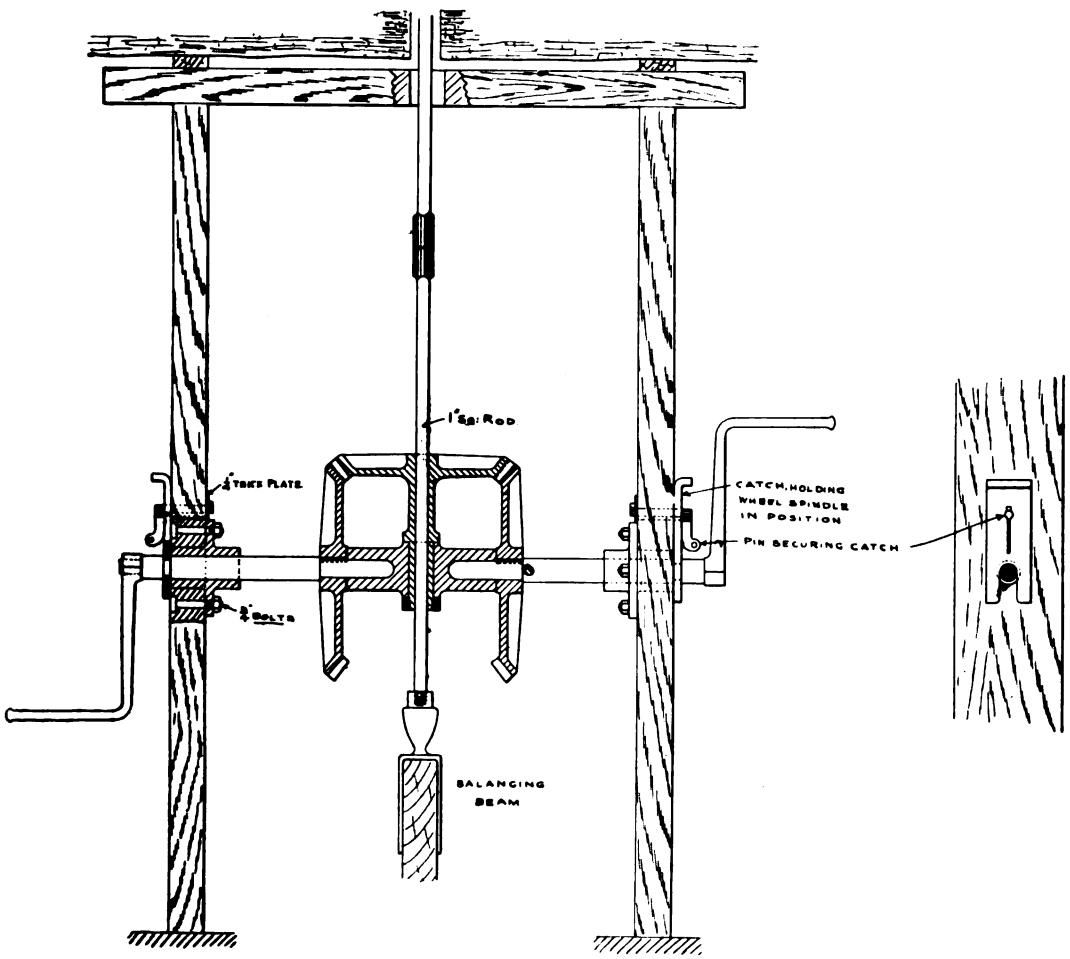

An Arrangement of Bevil Gearing.

The rods are then suspended by means of the clips, as shown in fig. 37, a new length of rod is added, and the lever lowered to the bottom hole again.

Fig. 40 shows an arrangement of bevil gearing which allows the drill to be rotated much more rapidly than when only the hand brace is used, and with less

exertion. Where electricity is available it would be a simple matter to work this arrangement with a small motor. The balancing lever arrangement is the same as shown in fig. 36.

When boring against old workings, in anticipation of danger from accumulations of water or gas, hand boring is usually adopted, light rods similar to fig. 38 being used, and worked by a ratchet brace and stand. The objection to this arrangement, however, is that should heavy pressures be tapped a serious accident might occur, owing to it being impossible to get the inflow of water or gas stopped; and to avoid the danger from this source, Mr. George Burnside has invented a safety boring apparatus, shown in figs. 41 and 42, which has been in successful operation for some years, and heavy pressures of water—upwards of 100 lb. per square inch—have been bored against and tapped without the slightest danger. This apparatus consists of a stand, long screw and ratchet brace (the latter not shown in the figure), a piston rod attached to the end of long screw by a coupling, and to the other end of the piston rod is fixed the drill as shown. This piston rod works through a stuffing-box and stop-cock, between indiarubber clamps shown in the section (fig. 42), and through the solid brass tube secured in the hole by means of the supporting plates and wedges. At the inner end of the tube is an indiarubber washer, which is pressed against the coal, when the side wedges are drawn tight, and makes a water-tight joint. The apparatus may be tested to double the anticipated pressure per square inch before being used. Should the boring hole into old workings or spaces in which gas or water is confined, its presence is at once indicated on the pressure gauge, when the rods are withdrawn, the stop cocks closed and the water may be gradually let off. Should the holing be made when the stuffing box is off for the purpose of adding another length of rod, and the rods cannot be withdrawn, the two indiarubber clamps are pressed hard on the rods by means of the hand wheels and screws, until the water or gas is shut off.

Mr. Burnside has also latterly introduced a hydro-boring machine to avoid the difficulty, experienced when boring very long holes, of the *débris* choking the drill. In this machine hollow rods are used in which a stream of water is forced down the interior, much in the same way as with the diamond drill previously described, the *débris* being forced out by the pressure of water; but instead of a diamond crown Mr. Burnside uses a short twist drill.

Boring is usually an expensive operation, though necessary, and too much attention cannot be paid to the quality of the material used in the construction of boring apparatus. A broken rod may mean the loss of an expensive boring by its having to be abandoned. Hollow rods should only be made from carefully selected tubes, steel ends carefully welded in and carefully and truly screw-cut, care being taken not to carry the thread on the male end right to face of joint, but to leave

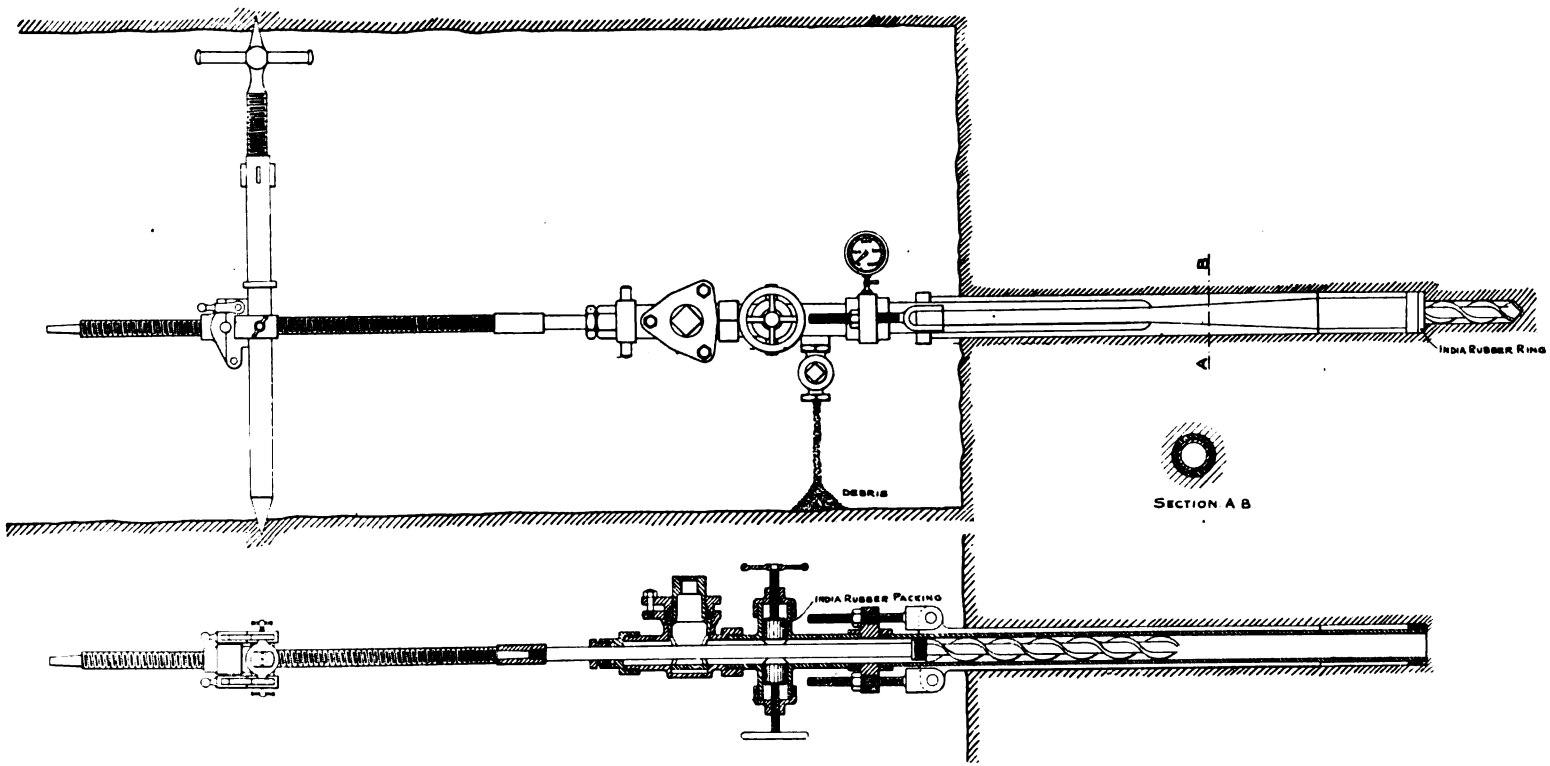

FIGS. 41 AND 42.—BURNSIDE'S SAFETY BORING APPARATUS.

the corner well rounded as shown in fig. 31, the corner on female end of screw being made to correspond. The drills and tools generally should be of the very best quality steel, and the old saw "the cheapest is the dearest," was never truer than in the operation of boring.

It is sometimes necessary to put a borehole down under water—as, for instance, in the middle of a river—and fig. 43 shows a method of staying pipes or tubes in the water. Such an arrangement, but for a very much greater depth of water, was used in proving ground for Prince Edward's Island Tunnel between Prince Edward's Island and New Brunswick. The rods are worked from a platform or raft.

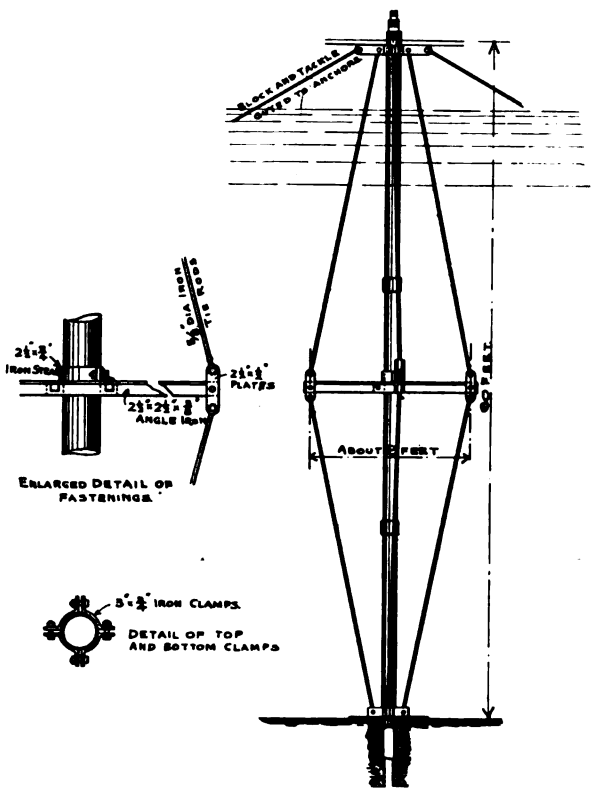

FIG. 43.—METHOD OF STAYING PIPES OR TUBES IN THE WATER.

There are many other tools and appliances used in boring, some ingenious arrangements being described in *Callon's Lectures on Mining*. In ordinary use there are keys or wrenches for screwing together the rods, lifting dogs, tools for withdrawing broken rods, pipe clamps, &c., which it is not necessary to further describe.

Bibliography: *Callon's Lectures on Mining*, translated by Sir C. Le Neve Foster and W. Galloway; *Transactions* of the Institution of Mining Engineers, 1869 and 1875; *Transactions* of the Institution of Mining Engineers, for description of the Calyx drill; and *Colliery Guardian*, September 11, 1903, page 561, for description of an electrically-driven up-over boring machine; André, *Coal Mining*.

CHAPTER II.

SHAFT-SINKING.

A FEW years ago the mechanical arrangements for sinking a shaft consisted of a winding engine and suitable headgear, and if a wet pit, a pumping engine on the surface and a running set of pumps suspended in the pit, the rock being drilled by hand tools and bricking or tubbing put in with a wood scaffold or platform suspended by means of a hand crab winch on the surface, and the operations of sinking and walling carried on one at a time. Of recent years, however, considerable attention has been given to the mechanical arrangements of a sinking pit, the object being to expedite the work of sinking and reduce somewhat the cost, which is important, seeing that the initial expenditure is in some cases very great, and no profitable results can be obtained until this work is through; and if by slightly increasing the expenditure due to the mechanical arrangements and appliances, and thereby reducing the time occupied in carrying out the work, the expense will be justified. Further, the tendency of the times is to increase the size of shafts, and consequently the cost of sinking; and shafts up to 20 ft. in diameter, when finished, are now being commonly adopted.

In England shafts are usually circular, this being considered the best form, and undoubtedly is the strongest where heavy pressures of water have to be tubbed back; but in Scotland and abroad the rectangular shaft, lined with wood, and divided into separate compartments for winding, pumping, &c., appears to be most in favour. A rectangular shaft certainly has its advantages, inasmuch as the pumping or hauling arrangements in the pit may be attended to without in any way interfering with the winding, and there is less risk of an accident to one operation extending to others; and, further, as the cost of sinking depends upon the quantity of material to be excavated, for a given size of cage, a rectangular shaft will cost less than a round one. On the other hand, it is said the lining costs more, but this will probably be balanced by the saving in excavating; there is, however, the question of ventilation to be considered, and if a pair of cages are made to fit a rectangular shaft it will be completely blocked at meetings, which is neither good for winding or ventilation; but this can be met by sinking a staple and driving openings into the shaft above and below meetings; but, further, as the friction of air depends upon the surface, a circular shaft has the advantage of

having a less perimeter than a rectangular form of given area. On the whole, from a mechanical engineering point of view, the rectangular form of shaft would appear to be the best, and this is evidenced by the practice outside our own country; but where the shaft is sunk through heavy water-bearing strata, the circular form must, of necessity, be adopted.

The arrangements for sinking must, of course, be varied to suit the circumstances, but usually they are of a temporary nature, though the question of at once erecting the permanent plant and sinking with these is an important consideration for small undertakings, but for large pits this would probably mean considerable delay, and in the event of disappointment, unnecessary expense. Where the quantity of water to be dealt with is of little moment, and the depth to be sunk not great, a simple arrangement would consist of a square-framed wood headgear, from 20 to 30 feet in height, with a landing stage fitted with balanced folding doors, 10 or 15 feet above the ground level, to facilitate the discharge of the *debris*, the lower part of the frame being enclosed for the purposes of protection, and provided with gates to admit material at the ground level. At this level also, folding doors may be fitted, or a bogie or trolley, large enough to cover the opening to the shaft, and running on rails—which was the usual arrangement—previous to the introduction of the balanced folding doors by Professor W. Galloway—may be provided. The temporary winding engine may be of the semi-portable type, which has the advantage of being able to generate its own steam; or if the permanent boilers are arranged for, a small geared winding engine, which can be readily converted into a hauling engine later, if necessary. This latter arrangement is probably best, as one or more of the main boilers would be already in place and available for supplying steam for other purposes, such as rock drilling, electric lighting, &c.

Figs. 44 and 45 show an arrangement of headgear adopted for sinking a new shaft in proximity to a shaft and heapstead already in operation, but which has become too small to deal with the required output. In this case the height of the landing stage is fixed to suit the old heapstead, and the *debris* is filled into tubs which are run over folding doors, which have rails for this purpose on the upper side, and the *debris* run out on lines already in use, to the stone heap.

In sinking large and deep pits the temporary headgear would be made of strong timbers, the feet resting in cast iron shoes on concrete foundations, the winding engine large enough to deal with a fairly heavy load, which of course would be unbalanced, and if a quantity of water is to be dealt with, arrangements provided for pumping, and also for walling or bricking the shaft. The shot-holes would be drilled by compressed air or electric drills, and the work carried out by aid of electric light. The landing stage would be high enough to allow of the *débris* being discharged by means of a shoot into a wagon below, and fitted with

folding doors covering the entrance to the pit. At the surface level the sides of the framing would be enclosed, and strong folding doors, with rails on the top side, or a bogie, would cover the shaft opening, and all material to be sent down the pit would be run in on tramlines, and dealt with at this level.

Figs 46 and 47 show the arrangement of headgear at the Horden Colliery

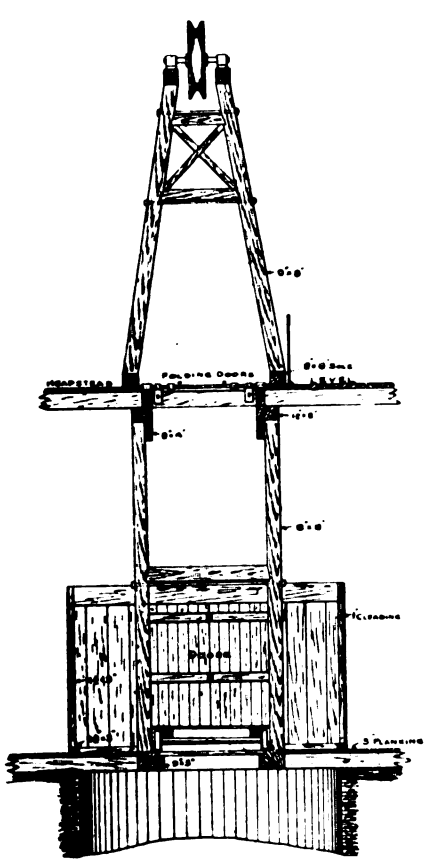

FIG. 44.

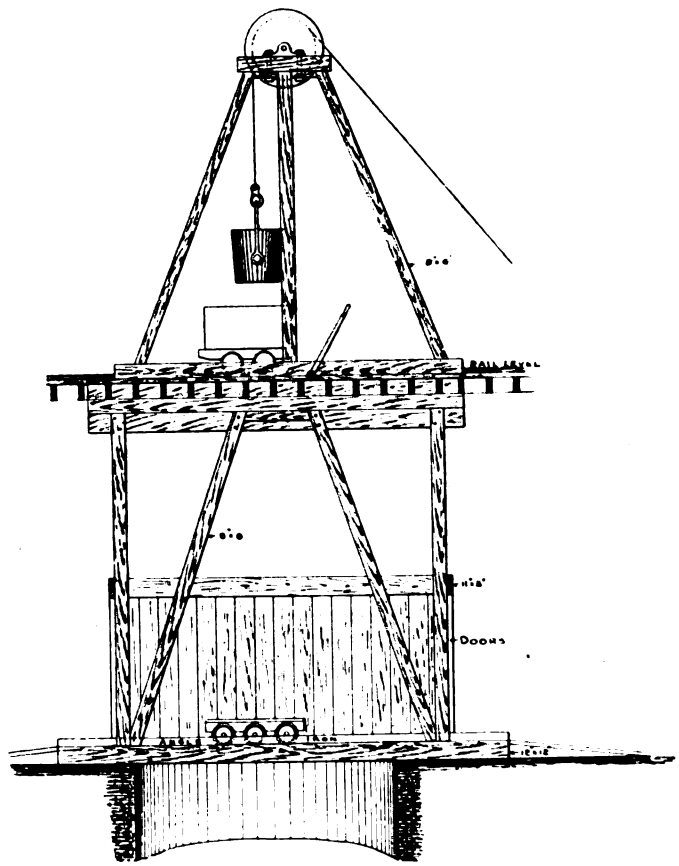

FIG. 45.

ARRANGEMENT OF HEADGEAR FOR SINKING NEW SHAFT AT EXISTING COLLIERY.

sinking, probably the largest and most difficult undertaking ever carried out in this country, with the ordinary means of sinking, but which has been brought to a successful conclusion under the direction of Mr. J. J. Prest, who very courteously supplied the information. Three shafts were put down, two of 20 ft. diameter for coal drawing, and one 17 ft. in diameter as the upcast or fan pit,

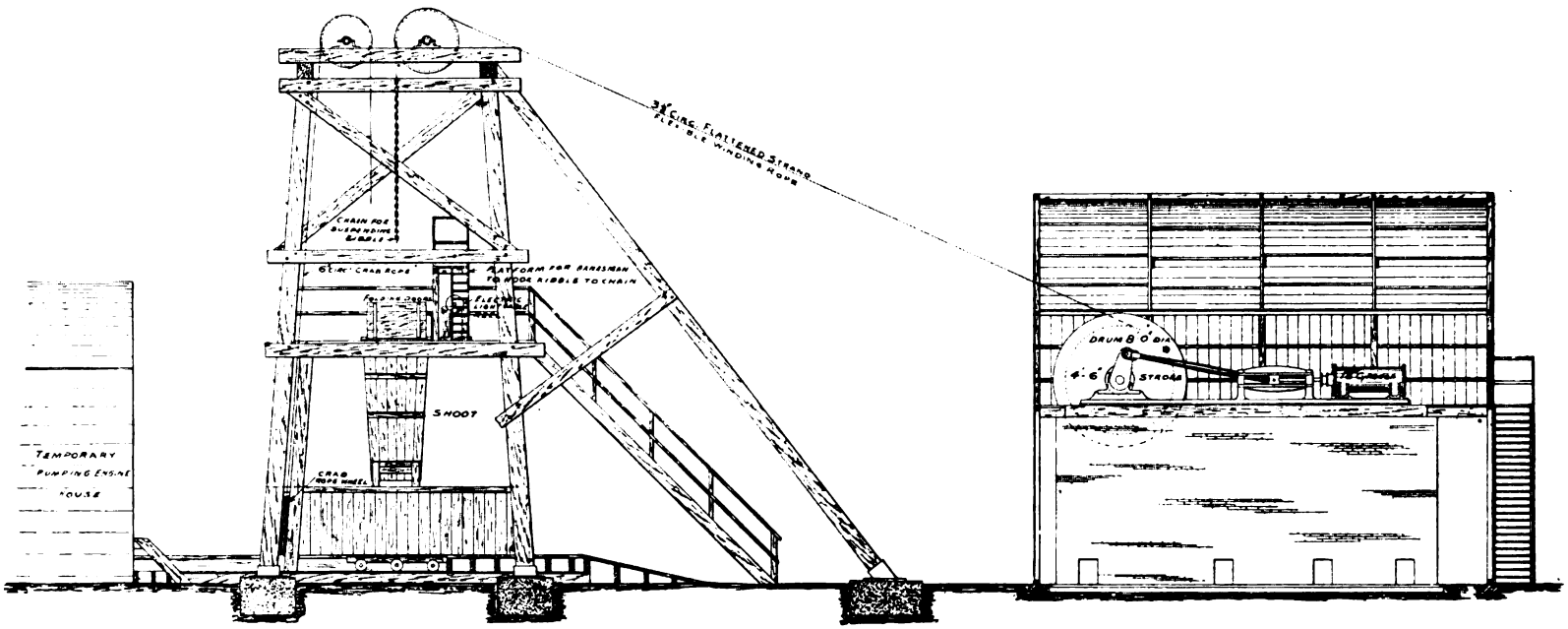

FIG. 46.—SIDE ELEVATION.—ARRANGEMENT OF HEADGEAR FOR SINKING HORDEN COLLIERY.

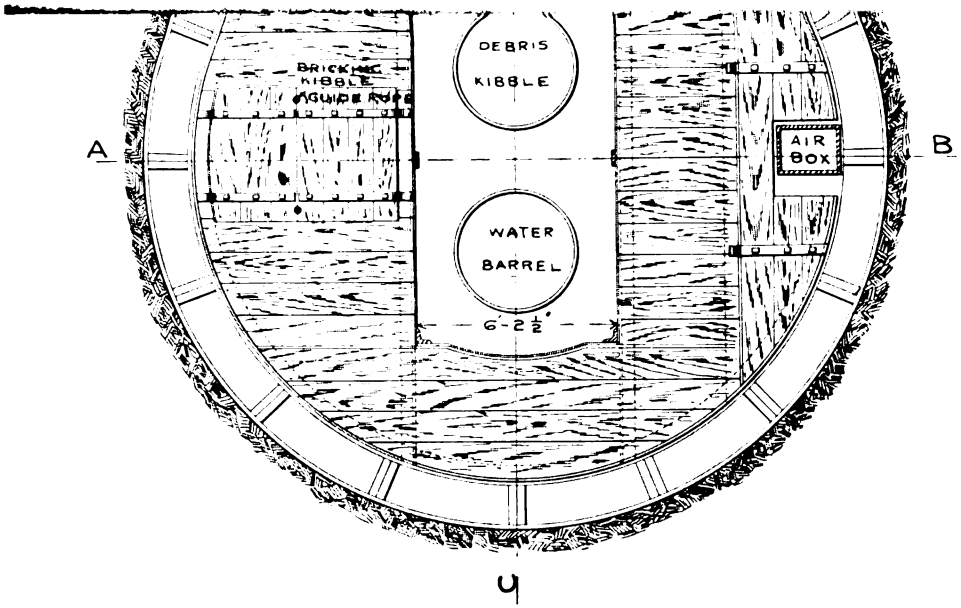

PLAN OF FLOOR.

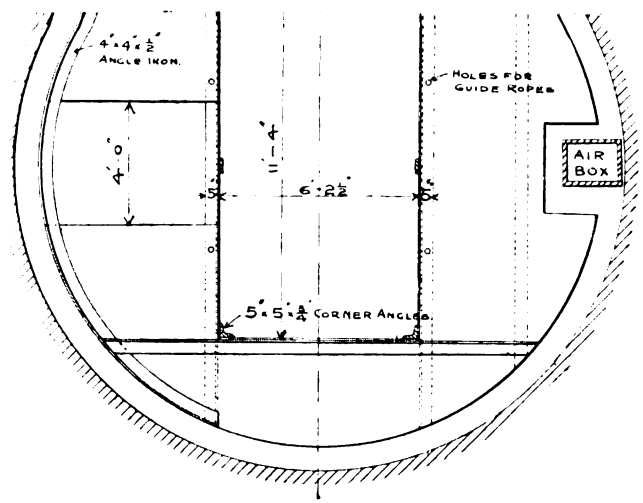

PLAN OF ROOF.

SINKING SCAFFOLD AS USED AT NEWBATTLE COLLIERY.

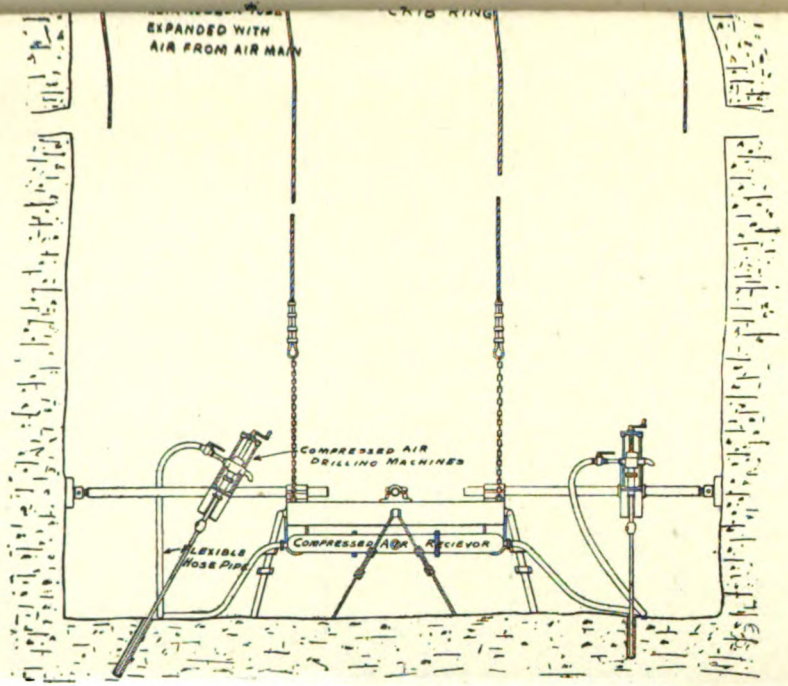

FIG. 56.—ARRANGEMENT FOR SINKING AND WALLING SIMULTANEOUSLY WITH WALKER'S SCAFFOLD AND PATENT DRILL FRAME.

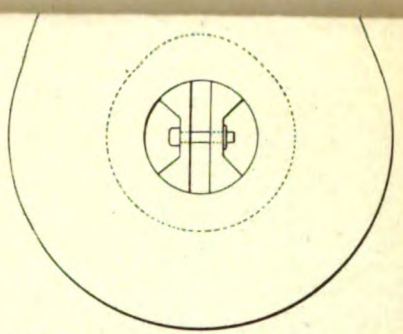

FIG. 58.—ARRANGEMENT TO ALLOW DETACHING HOOK TO PASS THROUGH RIDER FOR STEADYING KIBBLE.

(See page 37.)

PLATE III.

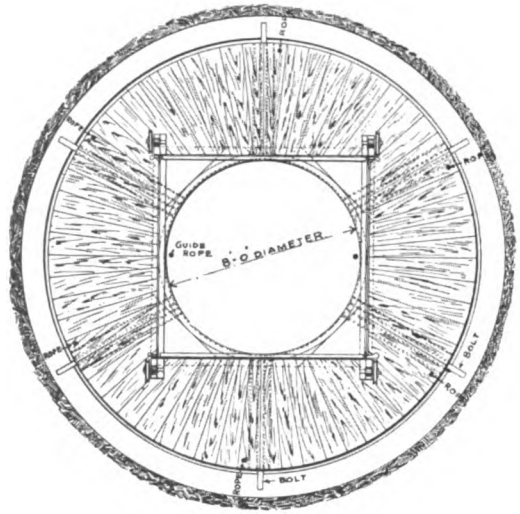

PLAN OF FLOOR OF SCAFFOLD.

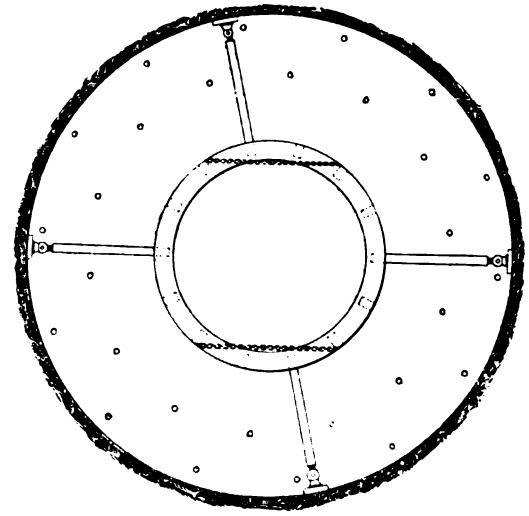

PLAN OF DRILL FRAME.

the sinking arrangements being similar for each pit. The headgear was made particularly strong, in anticipation of heavy pumping plant being required, which proved to be the case, feeders amounting to nearly 10,000 gallons a minute, or 600,000 gallons an hour, being met with, necessitating the use of a strong crab rope 6 in. in circumference. Folding doors, figs. 46 and 47, are provided at the upper landing stage, and a trolley at the surface level. The *débris* is discharged

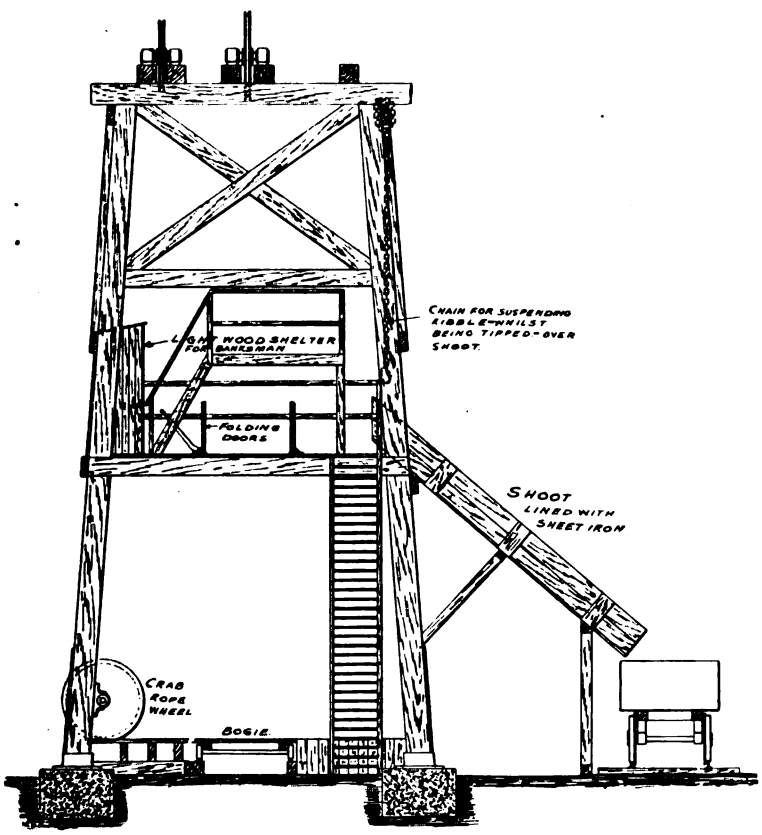
CHAIN FOR SUSPENDING KIBBLE WHILST BEING TIPPED OVER SHOOT.
WOOD SHELTER FOR BANKSMAN
FOLDING DOORS
SHOOT LINED WITH SHEET IRON
CRAB ROPE WHEEL
BOGIE

FIG. 47.—END ELEVATION.—ARRANGEMENT OF HEADGEAR FOR SINKING HORDEN COLLIERY.

down the shoot into side tip wagons, whence it is conveyed to the spoil heap. When a kibble comes to the surface, the folding doors are closed, the banksman then ascends the platform and attaches the chain, by means of a spring hook, to the same shackle as the rope is attached and signals to the engineman to lower. By this means the kibble is drawn over, and finally suspended by the chain directly over the shoot; the catches are then lifted and the kibble overturned on its trunnions, thus discharging the *débris*, after which it is brought back to its

normal position, the catches replaced, and the signal given to the engineman to rise; the banksman again ascends the platform and unhooks the chains, and when in this position the kibble is high enough to allow the doors being opened, which being done, the kibble is once again lowered down the pit. The whole operation is quickly performed and occupies very little time. Two kibbles are in use, one being filled whilst the other is being discharged.

Figs. 48 and 49 illustrate a pair of folding doors, and framing, designed so as to get the balance weights completely under the floor. Instead of holes being cast in the weights, a long slot is provided, in which the arm is fitted and bolted to it, with two bolts passing through the arm and weight, and as a further precaution split pins are put through the nuts. The levers and hinges are firmly keyed on to a steel weighbar, working in close eye bearings at each end. The hand lever is cranked to an angle of 60 degs. with the horizontal, being easier worked by the attendant at this angle than at 45 degs. Owing to the balance weights not being in a straight line with the doors, the latter will not remain upright when open, unless the hand lever is heavy enough to balance the weight due to the leverage equal to the distance from the centre of the weighbar to the centre of the weight, or unless a small catch is provided to keep the hand lever down. Otherwise it is a very neat and compact arrangement.

Figs. 50 and 51 show two views of a sinking kibble, made by Messrs. Jos. Cook and Sons, which is strong and of large capacity.

As previously mentioned, the operations of walling and sinking used to be carried on one at a time, the walling stage usually being made in halves, hinged together, and each half supported by three chains, the whole meeting in one common large ring and suspended from a hemp rope passing over a pulley at the top, and wound on the drum of a hand winch, by which means it was raised and lowered. In 1875, Professor Galloway proposed—and took out a patent for the invention—to suspend the walling scaffold on two ropes, one on each side of the winding rope, and to use these ropes as guides to steady the kibble during its ascent or descent in the shaft; and to carry on walling and sinking simultaneously, employing a small special winding engine to lower the bricks and mortar to the walling scaffold, the latter having an opening in the centre to allow the sinking kibble to pass through. This arrangement was adopted during the early part of the sinking of No. 1 Llanbradach pit, but had to be abandoned owing to the want of sufficient mechanical appliances for carrying out this work.

In sinking Newbattle Colliery, Mr. Morison adopted this method, and successfully carried on walling and sinking at the same time, and has very kindly supplied the drawings of the walling scaffold shown in figs. 52 and 53, which he designed for this work, and which was the first instance in which walling and

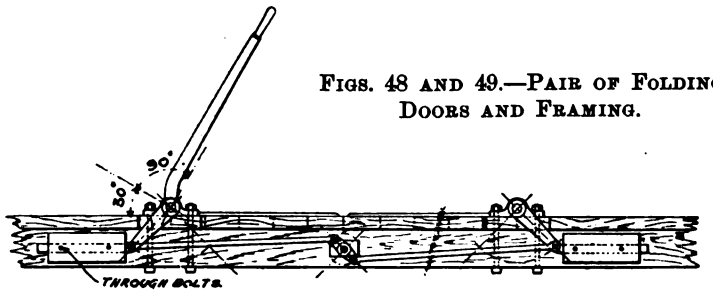

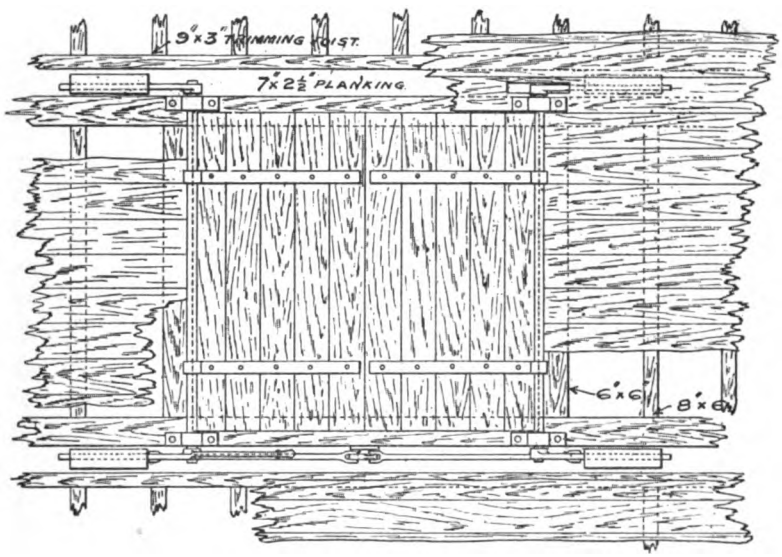

FIGS. 48 AND 49.—PAIR OF FOLDING DOORS AND FRAMING.

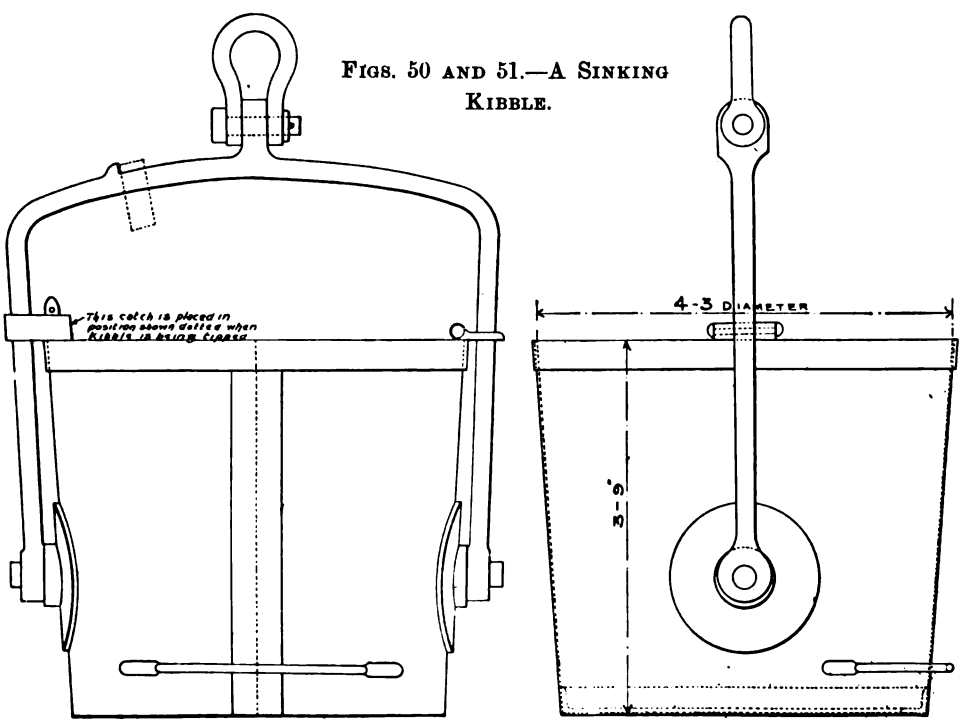

FIGS. 50 AND 51.—A SINKING KIBBLE.

sinking simultaneously were brought to a satisfactory conclusion. The scaffold as shown is suspended by four ropes, each 5 in. in circumference, and of Bessemer steel, in double purchase. One end of each rope is attached to the headgear by means of a screw, which also serves the purpose of adjustment; the other end passes round the wheel on the cradle, and over a pulley fixed to the headgear and on to the crab or capstan engine drum. Four drums are thus required on the engine. The cradle is very substantially built of steel angle bars, the floor stage being formed by a 4 by 4 inches by $\frac{1}{2}$ in. steel angle bar, supported and fastened to the 5 by 5 inches by $\frac{5}{8}$ in. steel angle bar bottom framing, and turned to a true circle, $1\frac{1}{2}$ in. less in diameter than the finished diameter of the pit, thus leaving a clearance of $\frac{3}{4}$ in., which, when walling, was packed with a roll of canvas or brattice cloth. The roof and framing carrying the suspending wheels are of 5 by 5 inches by $\frac{5}{8}$ in. angle bars, the roof being covered with $\frac{3}{8}$ in. steel plate, the floor being covered with planking 5 in. thick. An opening is left in the centre large enough to allow two kibbles to pass through, both being *débris* kibbles, or one being used for sinking, the other being a water barrel, and this opening is fenced with sheet iron $\frac{1}{4}$ in. thick and $6\frac{1}{2}$ ft. in height. Hatchway doors were also provided as shown, to allow the brick kibble being lowered through if required. The weight of the cradle is about $8\frac{1}{2}$ tons, and when loaded with bricks, mortar and men is about 20 tons. In addition to guiding the two kibbles in the centre of the pit, Mr. Morison added another guide rope for steadying the brick kibble, and suspending a water tank and scaffold with two pulsometers, suction pipes, &c., for dealing with the water in the pit bottom, below the walling scaffold. One end of this rope, like the others, was made fast to the headgear, and the other end passed round a pulley supporting the water tank and scaffold over another pulley on the headgear, and thence to a separate drum on the winding engine. There were thus ten guide ropes and three winding ropes altogether in the pit, requiring two winding engines and a powerful crab engine.

At first sight it would seem questionable if any real advantage is to be got by the use of so many ropes and engines, but as previously pointed out, if the time occupied in sinking can be reduced by their use, the advantages are obvious, first in reducing the expense due to establishment charges, and secondly in the earlier realisation of profits on the capital outlay.

Messrs. the Hardy Patent Pick Company Limited have supplied particulars of the sinking scaffold, in figs. 54 and 55, used in the sinking of Sherwood Colliery, in connection with Walker's patent sinking frame. In this case the scaffold is supported and fixed in position by six bolts, which are shown resting on the crib ring, and is further suspended from six ropes, which are attached separately to brackets bolted to the walling crib ring, the scaffold being clamped to these ropes,

which act as guy or safety ropes. Immediately underneath the floor is an india-rubber tube, which is inflated from the air-pressure main between the framing of the scaffold and the crib ring or wall as the case may be, thus making an absolutely watertight joint. The scaffold is built of steel angle bars with a strong wood floor, and has an opening 8 ft. in diameter to allow the kibble and drill frame to pass through. This opening is fitted with automatically-closing doors, and when closed they form a complete floor for the bricklayers, and a protecting roof for the sinkers below. The scaffold is raised and lowered by means of the two guide ropes and a crab engine on the surface. The shafts at Sherwood were 25 ft. 6 in. in diameter in the rough, and fig. 56 shows a complete arrangement with Walker's patent sinking frame. The drill frame is shown attached to two ropes, which act as guides for steadying the kibble, and serve the purpose of raising or lowering either the scaffold or drill frame.

Guide ropes in a sinking pit are a distinct advantage, permitting a greater speed of winding, and abolishing all risk of swaying of the rope, and saving the time necessary for steadying the kibble before starting. In designing riders for guide ropes, however, care should be taken to see that the bearing surfaces are long enough to prevent locking or sticking. Wood bushes are generally used to fit easily on the ropes, and should be from four to six times the diameter of the rope in length. The hole in the rider where the winding rope passes should be large enough to admit the detaching hook, and the rider may either rest on the bow of the kibble, or some special arrangement between the shackles of the kibble and detaching hook, one such being shown in figs. 57 and 58.

Mr. Walker has invented and patented a new form of rider, shown in figs. 59–61, to overcome the difficulty with the detaching hook, which is both novel and interesting, and was used at the sinking of Sherwood Colliery. As shown, it is constructed of steel bars and angles, so arranged that the two angle bars—one on each side of the winding rope, each with half of the rope block attached—are hinged, by means of the vertical uprights, to the lower guide rope blocks, so as to open outwards from the winding rope, as shown by the dotted lines in fig. 61, thus allowing the detaching hook to pass between. Ordinarily the rider is carried at the top of the socket or capping, the two angle bars being held together by the slotted side plates of the upper guide blocks and pins through the vertical bars, the former being held in position on the latter by the copper rivets. Should an overwind occur, the upper guide blocks come against stops on the guide ropes, which cause the copper rivets to be sheared through, thus allowing the upper blocks to drop down upon the lower guide blocks, freeing the pins, and thus releasing the winding rope from the rider, which opens out as shown by the dotted lines in fig. 61.

Where guides are used, the kibble must of course be discharged when in position directly over the pit. At Newbattle, Mr. Morison used a shoot built of steel plates and mounted on wheels, which was run under the kibbles on rails on top of the doors, and either kibble discharged into it. At Sherwood a side tip wagon was run on to the doors to receive the *débris* from the kibble, and then run to a shoot, where it was discharged into wagons. Probably a better arrangement than either would be to have the top end of a shoot built of light steel plates, balanced and hinged, so as to lift up out of way when the doors were opened, and to lower over

FIG. 59.

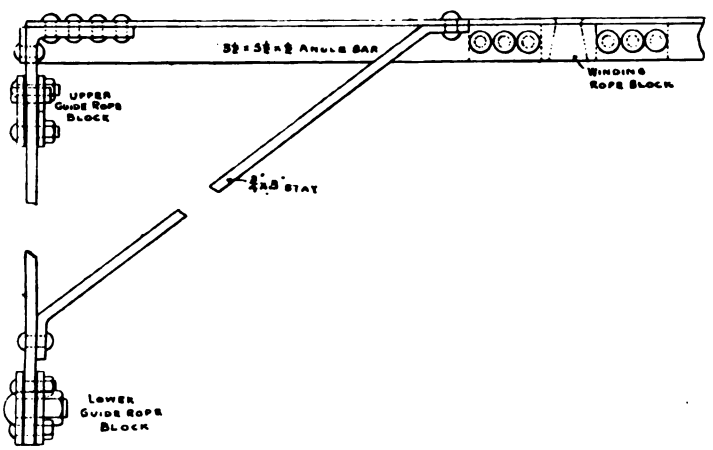

FIG. 61.

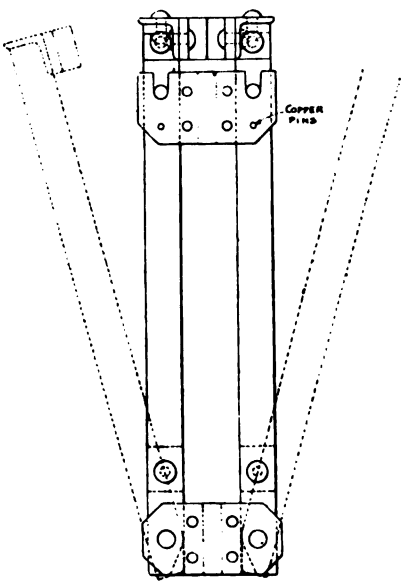

FIG. 60.

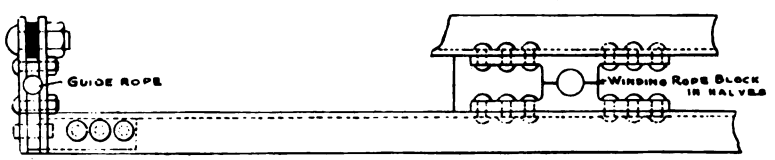

WALKER'S PATENT RIDER.

the doors when the kibble was to be discharged. The doors themselves might be used for this purpose by arranging them to meet, so as to form an angle of about 90 degs. when closed, but the objection to this arrangement would be that no flat surface would be available to rest the kibble upon.

Fig. 56 also shows another arrangement of folding doors, which are worked by means of a steam cylinder, due to Mr. Walker, whose patent walling scaffold and sinking frame is also shown in position. The sinking frame consists of a heavy cast iron ring, with a ⊥ shaped slot in the top, by means of which the

FIG. 62.

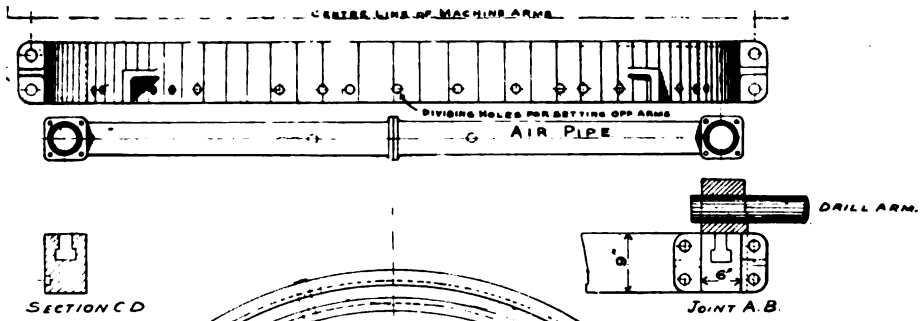

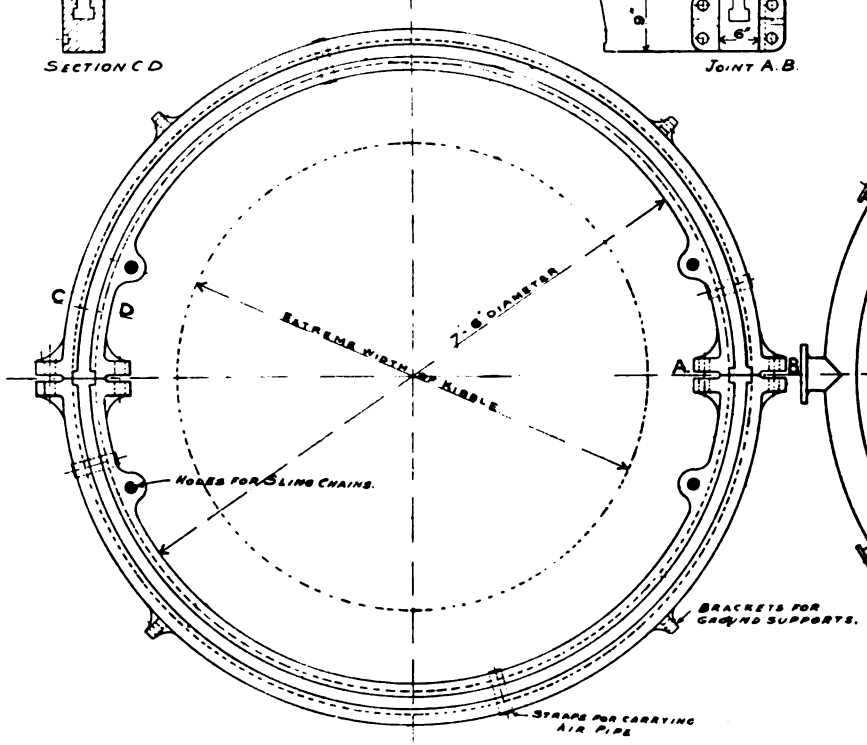

FIG. 63.

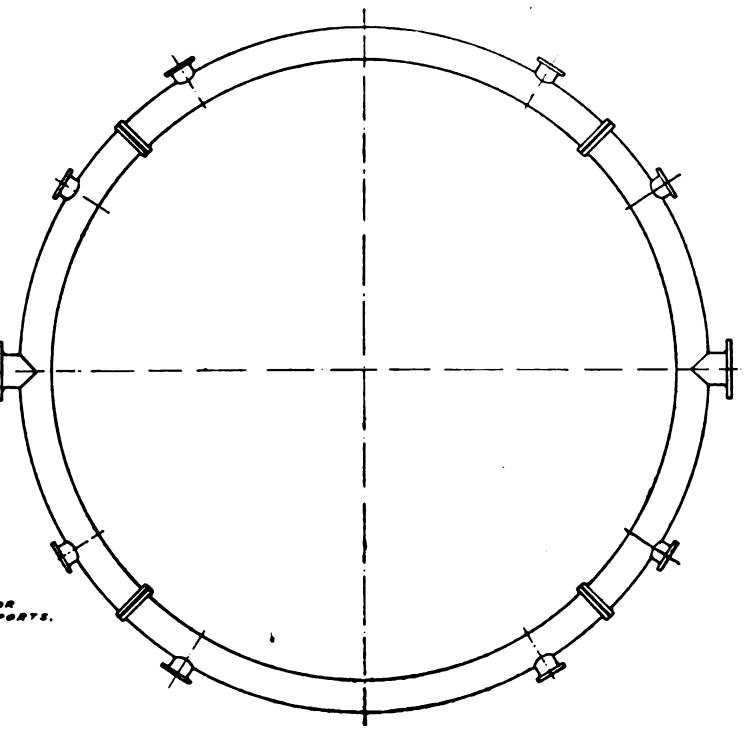

FIG. 64.

WALKER'S PATENT DRILL FRAME.

clamps securing the drill arm are bolted thereto. The drill arms may thus be adjusted to any position circumferentially, and is further divided by marks or indexed, so that holes may be quickly and accurately set off without having to measure for their positions. Underneath this ring is suspended the air receiver, consisting of a circular pipe divided into four parts, as shown in plan in fig. 64, and to which are attached the flexible air pipes connected to the percussion drills, as shown in fig. 56. The ring is also provided with wrought iron stands, so that the suspending ropes may be detached, and used for raising or lowering the walling scaffold, and after the latter has been fixed by the safety suspending ropes and bolts, re-attached to the drill frame. Fig. 65 is from a photograph, which

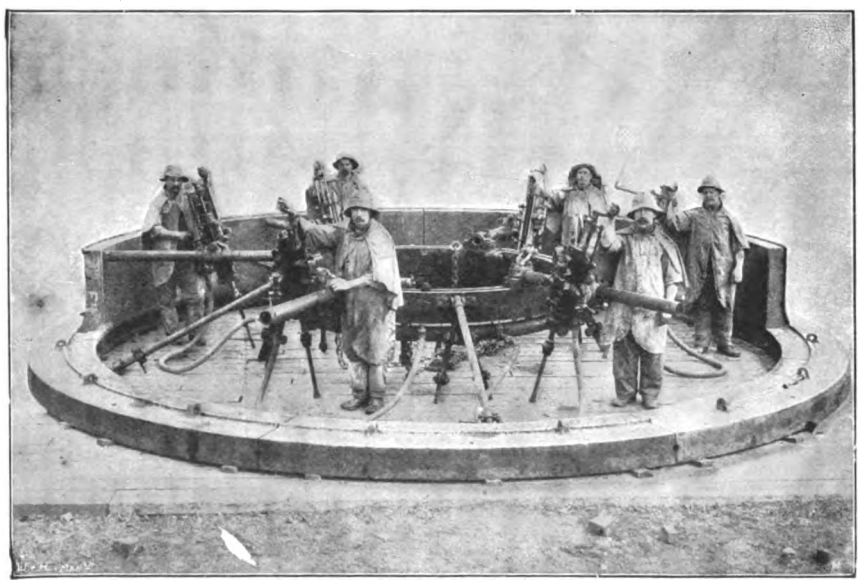

FIG. 65.—WALKER'S PATENT SINKING FRAME.

clearly shows the frame and drills *in situ*. Figs. 66 68 show three views of Walker's patent sinking frame suitable for rotary drills, which are worked by flexible shafts from compressed-air driven motors contained in the frame. As shown in section in fig. 66, it is seen to consist of a hollow stand, of cast iron, around which are fixed a number of motors, driven in this case by compressed air, the interior of the stand forming an air receiver. Fixed to the top of the stand are a number of arms, provided with a long slot, by means of which the drill may be secured in any position, as shown in fig. 68, radially to the centre of the shaft. These arms are arranged so as to be readily put into a vertical position, as shown by the dotted lines, fig. 66, when it is required to withdraw the frame

FIG. 66.

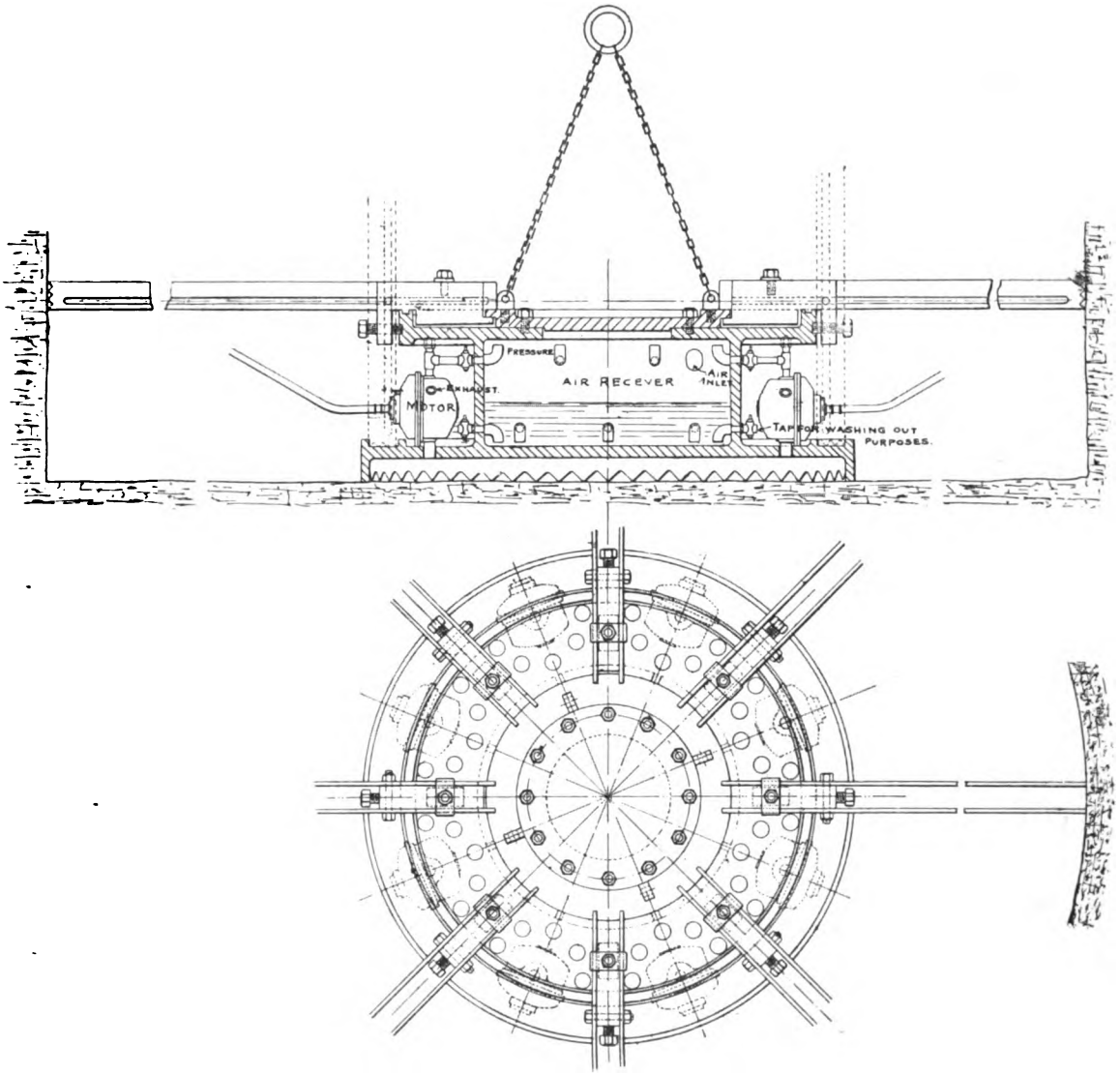

FIG. 67.

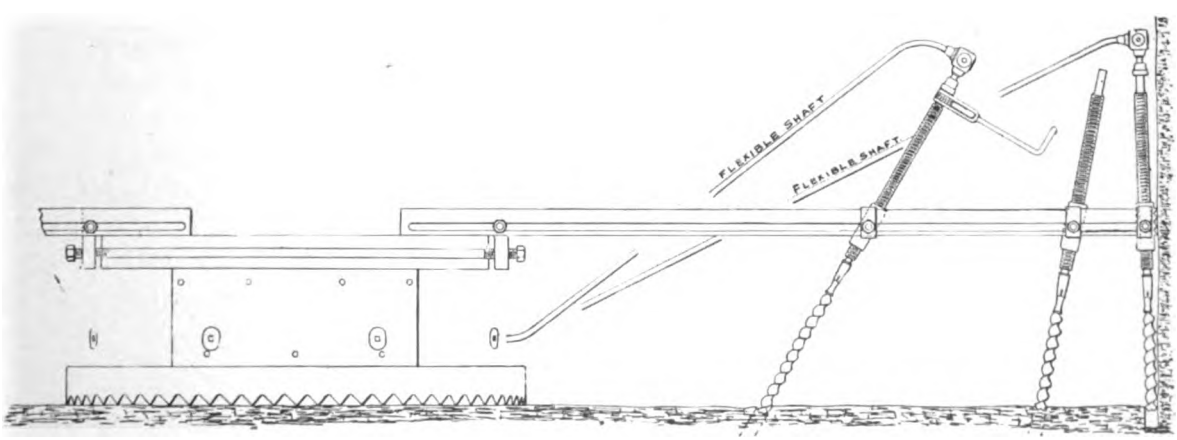

FIG. 68.

and holes are arranged in the top of the cover, as shown in plan, fig. 67, in which to place the drills belonging to each arm. The whole arrangement is suspended by chains and can be lowered into the pit, or withdrawn in a very few minutes. The interior or air receiver may also be partly filled with water, which is discharged under the pressure of the air, through the tap, as shown, and used for the purpose of washing or cleaning out the *debris* in the shot-holes. Figs. 69 and 70 are from photographs of the machine ready for boring, and closed for raising or lowering.

If compressed air is not available, electricity may be used as the motive power, and figs. 71 and 72 illustrate another form of frame by Mr. Walker, in which the motor—which may either be electric or a petrol gas engine—is situated in the centre, and drives by means of a shaft and pinion a revolving rack, mounted upon small rollers. This rack in turn drives the pinion wheels fixed to the drill shafts, to which are attached the flexible shafts working the drill. In the case of a petrol motor, the main driving shaft is provided with a square on the end for applying a starting handle, a water tank and petrol tank being also provided for inside the frame.

The machines have proved eminently successful, and their adoption will result in the saving of both time and money. Rock drills will be dealt with later, in another chapter.

In dealing with water in a sinking pit, the question arises, shall it be pumped or wound? And further, if pumping be decided upon, the type of pump to adopt? Whether to sling direct-acting steam-driven pumps in the shaft, or sling the pump only and work with an engine fixed on the surface? The answer to the question largely, of course, depends upon the circumstances, and the quantity of water to be dealt with.

Probably no method is so simple and so suitable as winding, or as economical—though in any system economy usually gives way to expediency. In his "Lectures on Mining," Professor Galloway says, in speaking of winding water:—"The appliances are not costly; they are of the simplest description; they are not liable to get out of order; they are not affected to an appreciable extent by water containing sand or sediment of any kind; they can be raised or lowered in the shaft by operating at the surface, and therefore cannot be drowned; they require no buntons to support or guide them; they can be cleared out of the shaft in a few hours, leaving it wholly free, and can, if necessary, be replaced by other larger appliances of the same kind, at a minimum of time and cost; and lastly, provided the winding engine is sufficiently powerful, they can be applied at any depth to raise the water direct to the surface without requiring to be duplicated or triplicated as in the case of pumps."

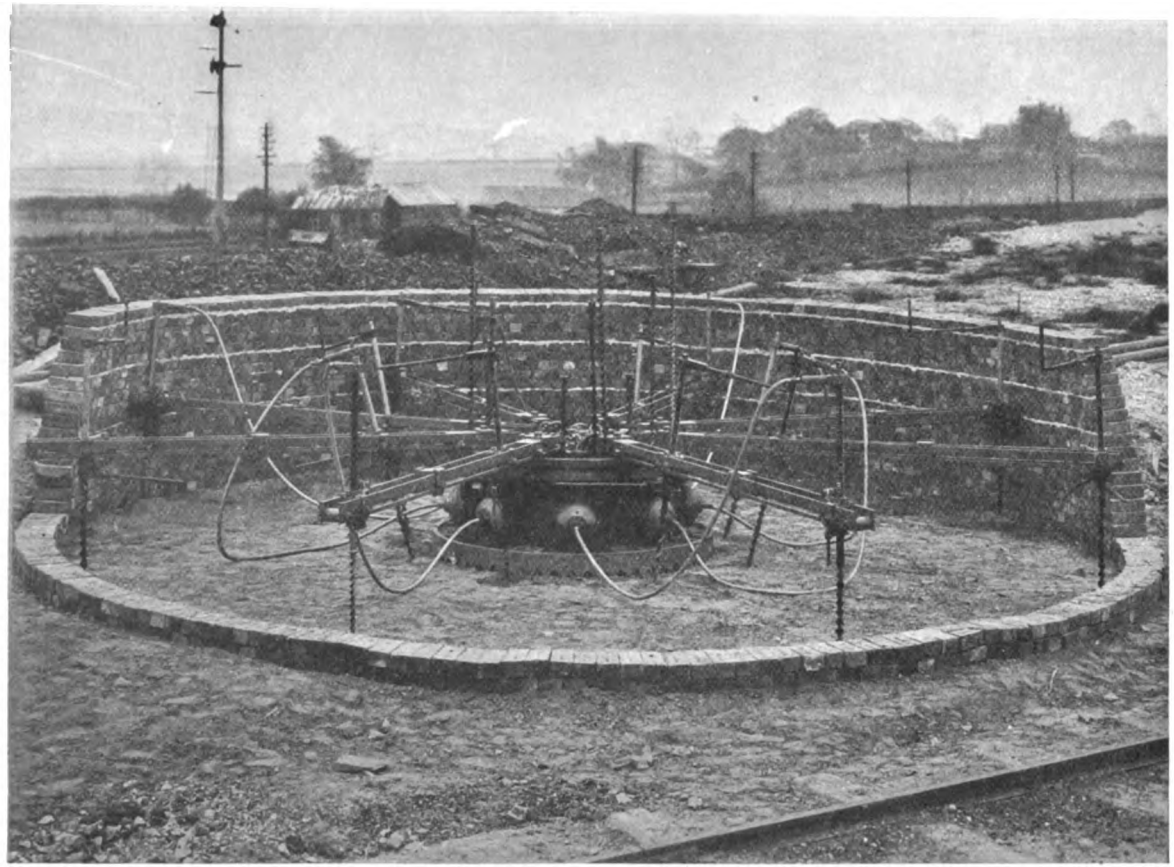

FIG. 69.—WALKER'S SYSTEM OF SHAFT SINKING WITH ROTARY BORING MACHINES.
Machine opened Ready for Boring Operations.

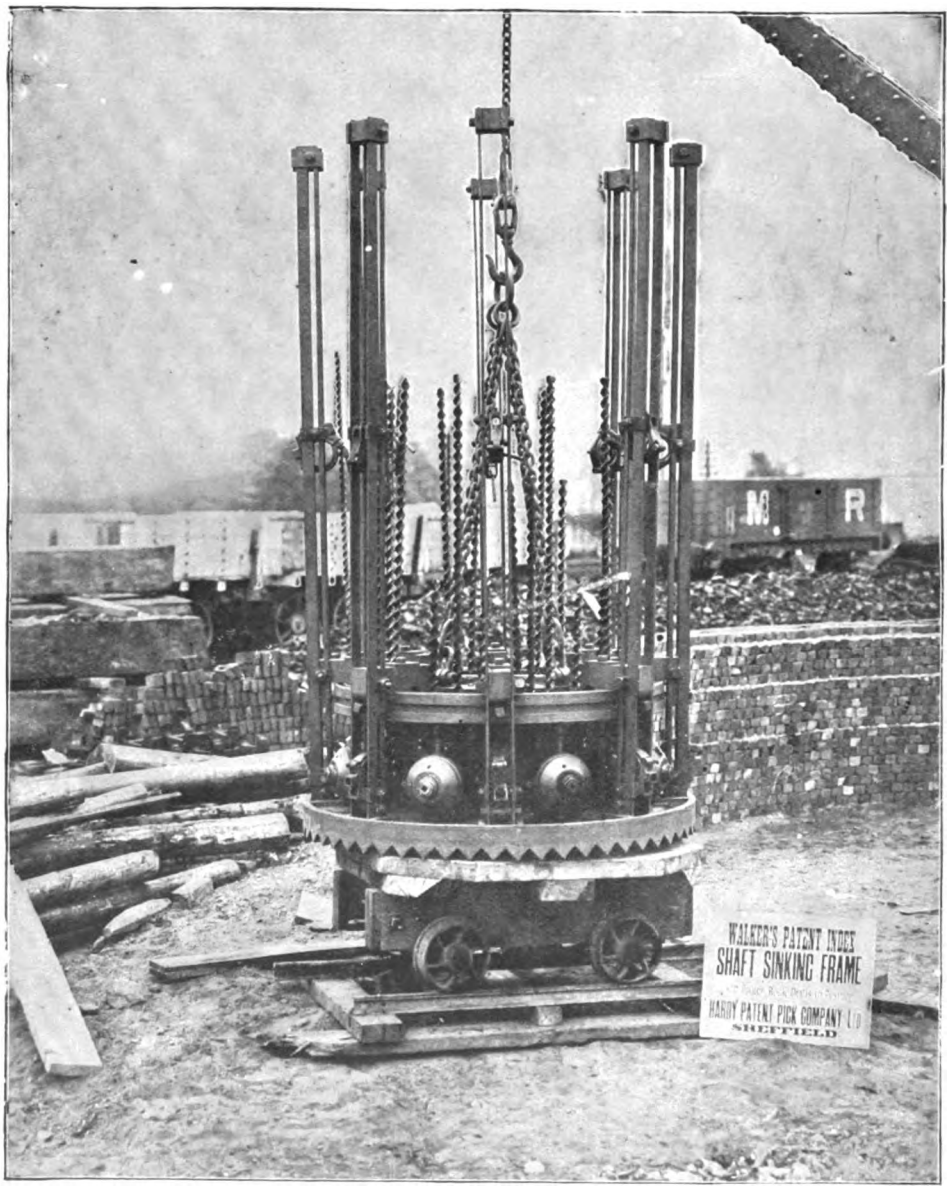

FIG. 70.—WALKER'S SYSTEM OF SHAFT SINKING WITH ROTARY BORING MACHINES.

Machine Closed for Lowering or Raising.

Between the other two systems of slinging direct-acting pumps, or the pumps only, and working them from the surface by a fixed engine, there appears to be little to choose. Certainly the former has the advantage in handiness, no foundations being required, but, on the other hand, the steam pipes are to carry down the shaft, with consequent heavy condensation of steam ; the engine can only be got at from a scaffold or kibble, or while suspended in a loop ; or has to be brought to the

WALKER'S PATENT ELECTRIC OR PETROL MOTOR SINKING FRAME.

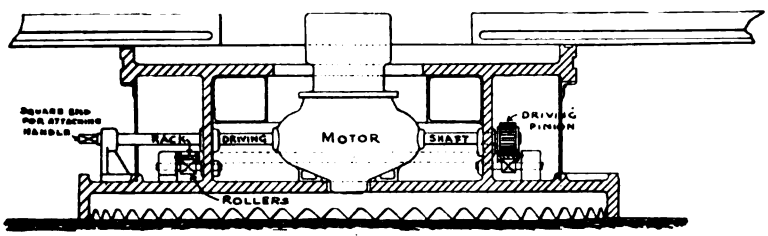

FIG. 71.—SECTIONAL ELEVATION.

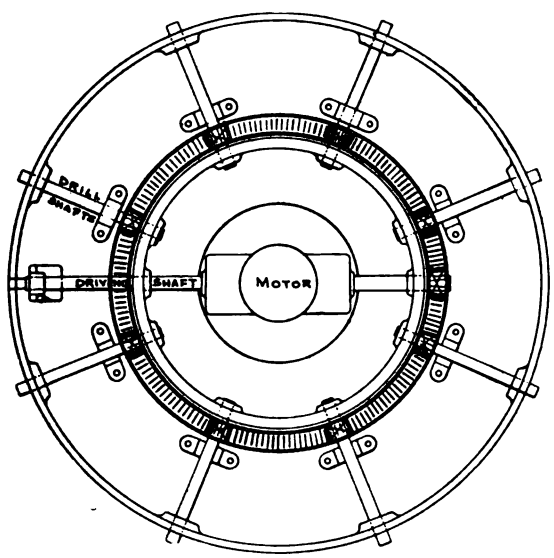

FIG. 72.—PLAN.

surface for overhaul ; and there is a more certain amount of risk of accident to the workmen below.

Small quantities of water from 1,000 to 2,000 gallons an hour may easily be dealt with by winding, either in the ordinary kibble, or a water barrel fitted with a valve in the bottom. With the latter a water bogie is run under the barrel, fitted with a conical piece for raising the valve, the barrel lowered on to it, and the water

run out; with the former it is tipped in much the same way as discharging *débris*; but in both cases the water would be pumped or baled in by hand by the sinkers at the pit bottom.

In order to deal with larger quantities, Professor Galloway invented the pneumatic water barrel, which enables quantities of 6,000 gallons an hour and upwards being dealt with in this way. Figs. 73 and 74 show two views of this barrel, taken from Professor Galloway's "Lectures on Mining," from which it will be seen to consist of a cylinder closed at both ends, having a leather-faced valve

PNEUMATIC WATER BARREL FOR WINDING WATER.

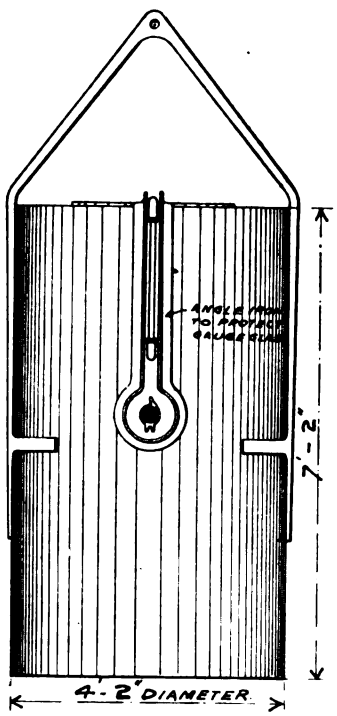

FIG. 73.

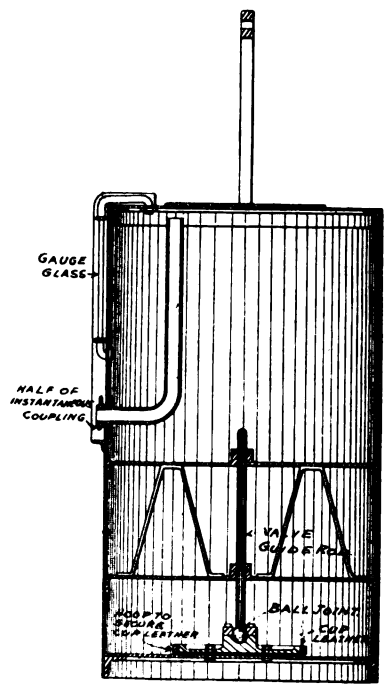

FIG. 74.

opening upwards at the bottom; attached to the side is an open pipe, extending to within half-an-inch or so of the top of the barrel inside, and fitted with one half of an instantaneous coupling to its outer end. Some means on the surface for producing a vacuum is provided, from which pipes are carried down the pit, where they are provided with a stop cock, and connected to the water barrel by means of a length of flexible hose pipe and the instantaneous coupling. On the stop cock being opened, the air in the barrel is extracted and the water lifts the valve and rushes in; the attendant watches the gauge glass, and so soon as the water rises to

about an inch from the top of the pipe he closes the valve, detaches the flexible pipe, and signals for the barrel to be drawn up, and on its reaching the surface is discharged by being lowered on to a water trolley, as previously described. At Llanbradach an old steam boiler was used, in which a vacuum was produced by a steam blower costing £4 or £5, the pipes from this receiver being of wrought iron, 3 in. in diameter. The rate at which the barrel may be filled depends upon the diameter of the pipes and of the valve in the bottom of the barrel, and upon the depth of the pit. At Llanbradach the barrel, holding 600 gallons, was filled in thirty seconds at a depth of 250 yards, but took from forty to forty-five seconds to fill at 500 yards depth. Professor Galloway, in his "Lectures on Mining," further states that, with a 4 in. vacuum pipe, and a barrel holding 1,000 gallons, having a valve 2 ft. in diameter at the bottom and worked by a special winding engine, from 18,000 to 20,000 gallons of water an hour could be raised without interfering with the sinking, from a depth of 400 yards.

Larger quantities still may be effectively dealt with by using a tank suspended by two ropes, or from one rope, forming a loop in the shaft, the ropes acting as guides to large water barrels with a capacity of 1,000 gallons, and a powerful winding engine, such as the permanent winding engine, which might be put down specially for the purpose. At Llanbradach, Professor Galloway specially designed two automatic tanks, each running in rope guides which supported the tank, and each with a capacity of 1,000 gallons, which were automatically filled and emptied forty-seven times an hour, from a depth of 200 yards, thus raising 90,000 gallons of water an hour, or 1,500 gallons per minute.

Water accruing from the shaft sides would be led down by means of temporary wood water-rings and pipes, and collected in the tanks, and water accruing in the pit bottom would be raised into the tank by a pulsometer, which may be suspended from the bottom of the tank. As the sinking proceeds, the whole are safely and easily lowered by the crab engines on the surface, with a minimum of time and trouble.

In dealing with very large quantities of water, resort must be had to pumping, and if the quantity is beyond the capacity of the pumping plant that can be got into the shaft, then special methods of sinking such as the Kind-Chaudron, or the freezing process, must be adopted. The latter, however, are both expensive, but it would seem that where the quantity is over 500,000 to 600,000 gallons of water an hour, it would be cheaper to adopt them at once, than endeavour to cope with the feeders by pumping.

In arranging pumping plant, it is desirable to consider whether any of the permanent plant may be used for this purpose, so that at the end of the sinking as little plant as possible will be left on hand that cannot be applied to any useful

purpose. On the other hand, in some cases temporary plant may prove to be considerably the cheapest.

Probably no pumping plant for dealing with great quantities of water has yet superseded the old wet spear bucket pump. That it is heavy and may be clumsy is not denied, but it is simple, effective, and always get-at-able, so to speak. On the other hand, it requires massive foundations, and it is not always possible or convenient to have these; and to overcome such difficulties direct-acting steam pumps are now often used, suspended in the shaft by means of ropes and a crab winch, and lowered as the sinking proceeds.

In sinking the Horden pits, Mr. Prest decided in favour of the old wet spear pump, the pumps being worked by means of the permanent winding engines, placed temporarily in suitable positions, and in one pit four running sets were placed, each 30 in. in diameter; and in the other two pits two pumps of the same dimensions—eight pumps in all—each pair being worked by a single engine of the permanent winding engines; and the average feeders dealt with by four 30 in. sets delivering to bank, during the last ten weeks previous to the tubbing being wedged, amounted to the enormous quantity of 9,230 gallons per minute, as actually measured each day in a measuring tank at 12 noon, or practically 600,000 gallons an hour. This is probably the largest quantity of water ever yet successfully dealt with in a sinking pit, with pumps of any description; and much may be said of the excellent design and construction of these pumps, which were worked at as high a rate as sixteen double strokes per minute.

Fig. 75 is an illustration of this class of pump, designed for the sinking of Morpeth Colliery, shown suspended in the pit. Two pumps are arranged for, as, if only one pump be used, some means must be adopted for balancing the weight of the spears and bucket. For temporary purposes the permanent winding engine is erected for working the pumps, a set of gearing being introduced between the crank shaft of the engine and the quadrant connecting rod. The quadrants may be of cast iron, but are now usually built up with steel plates and sections, the shafts and gudgeons being steel forgings, and fitted into built-up or cast steel bosses. The quadrant bearings are secured to a cast iron sole plate fixed to a steel girder bedplate, fixed to heavy brick or concrete pillars, and in this class of pump care should be taken to see that the tail pillar, or pillar farthest from the engine, is of ample weight. The connecting rods are built with steel bars with a thickness of timber between and securely bolted together. The spears are of pitch pine, and of as long a length as can possibly be dealt with, and jointed together by a scarf and best wrought iron spear plates and bolts, and which will be dealt with later, along with the bucket and clack, in pumping machinery. The working barrel, bucket and clack pieces, the latter being provided with doors, and strum or

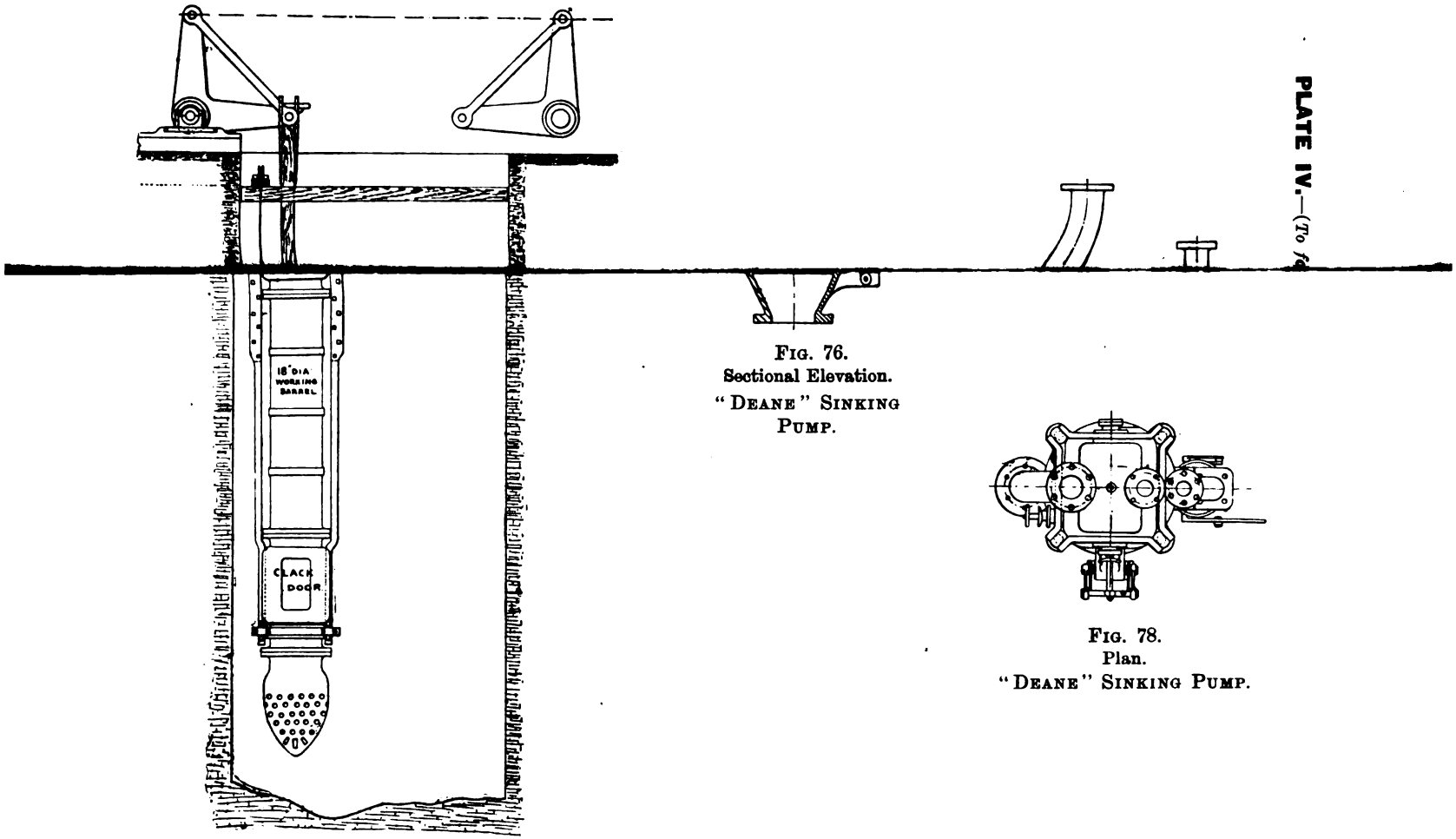

FIG. 75.—SINKING PUMP AT MORPETH COLLIERY.

FIG. 76.
Sectional Elevation.
"DEANE" SINKING
PUMP.

FIG. 78.
Plan.
"DEANE" SINKING PUMP.

windbore are of cast iron, but in order to reduce the weight as much as possible, the pipes should be of steel or iron, and there is no difficulty now in procuring these pipes of almost any dimensions. In the pump shown the working barrel is 18 in. in diameter, and the rising main pipes 20 in. in diameter, and in this case the water is not delivered at the surface, but to a delivery drift some 18 fathoms below. It is suspended by an arrangement of pulleys in the shaft by one rope, and raised or lowered by a crab engine on the surface, one drum only being required for each pump. The rope from the drum passes down the pit and under the outside pulley fixed to the top of the ground spear, then over the fixed side pulley, and back to the inside ground spear pulley, and thence to the fixed back pulley, which is of a diameter to suit the centres of the inside spear pulleys. From the back pulley it passes to the pulleys on the other side of the pump, and is finally made fast to the bunton supporting the fixed pulleys. The dry spear works in a guide at a suitable distance from the top, and the ground spears are fixed between guides, as shown in the sketch, to prevent the pump swaying.

The chief disadvantages of this pump are its large dimensions, taking up considerable room in the shaft, and costly and heavy foundations; but apart from these it is safe, reliable, simple, and has stood the test of time, and, for these reasons, still has numerous supporters, and most of the heavily-watered pits in this country have been sunk with the aid of this pump.

Where it is more suitable to suspend direct-acting pumps in the pit, an excellent pump for this purpose is the "Deane" sinking pump, shown in figs. 76, 77 and 78, and manufactured by the Pulsometer Engineering Company Limited. From fig. 76 it will be seen to consist of two hollow rams whose areas are in the proportion of practically 2 to 1, the top one being rigidly connected to a steam cylinder, to the piston of which is attached, by two stout piston rods, the top working barrel and bottom ram, between which is a valve or clack, consisting of a number of small valves. As the piston rises, the water follows the ram through the bottom valve until it reaches the top of its stroke; and on the downward motion half of this water is forced through the upper valve and through the top ram into the rising main, the remaining portion being forced through on the upward stroke: the delivery of water therefore being continuous and steady. An air vessel is fitted as shown on the right of fig. 77. The steam valve is positively driven by means of the bell cranks and levers as shown; and another set of levers are arranged or shown on the right in fig. 77, to actuate the cylinder drain cocks which, by means of light rods, or cords, may be opened or shut at a considerable distance from the pump. The clack or valve-box covers are hinged, which is a great convenience when a workman has to examine or repair the valves from a small scaffold or while suspended in a loop. The whole pump is suspended from

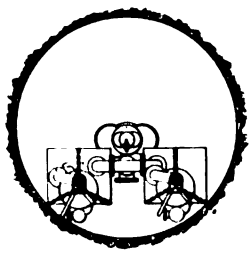

FIG. 81.
Plan.

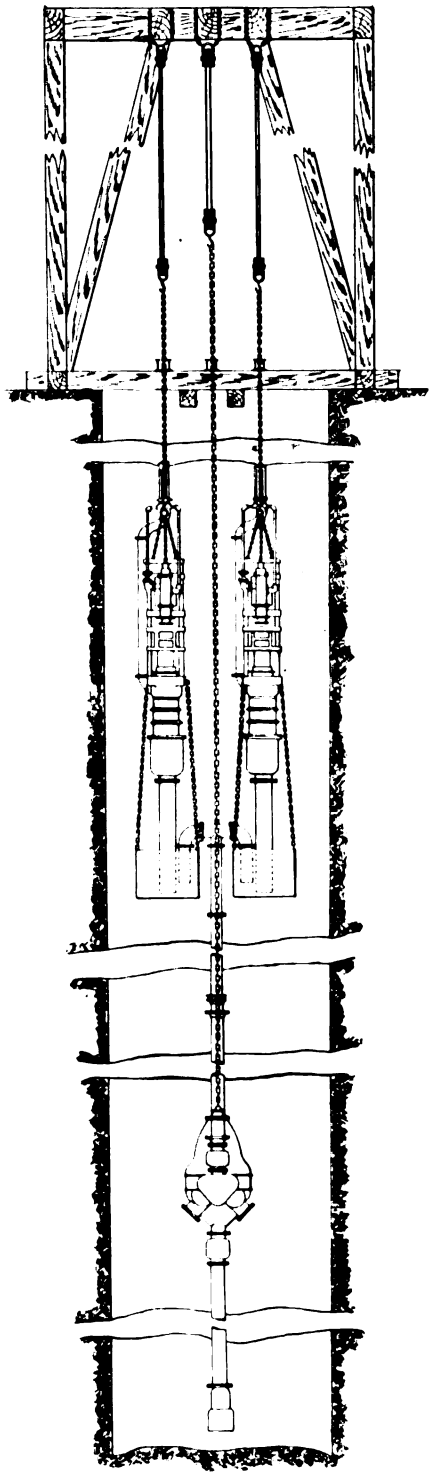

FIG. 79.
Front View.

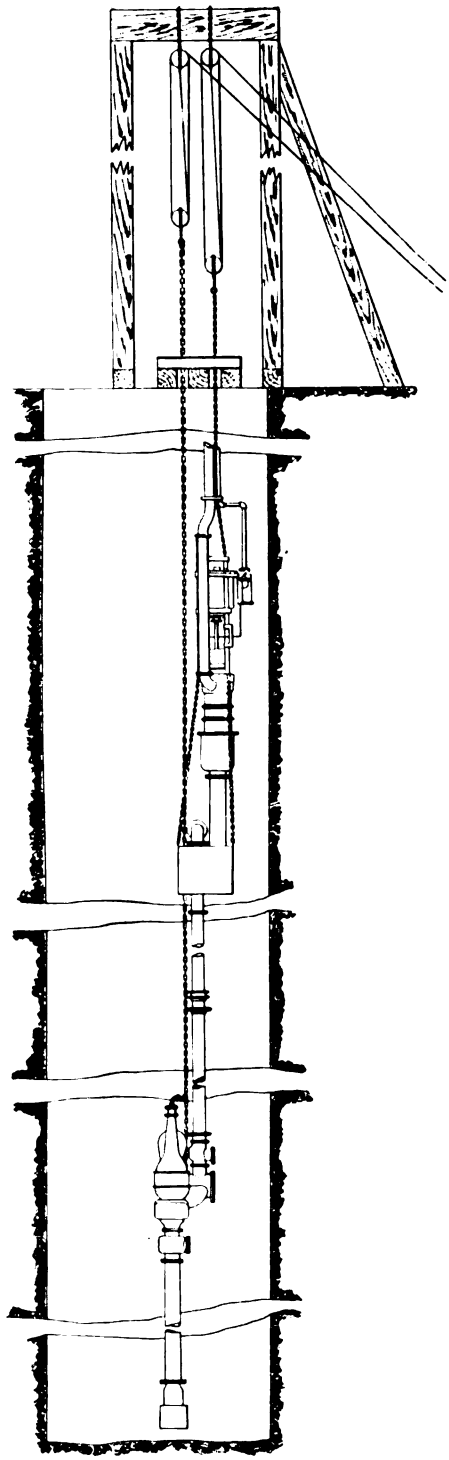

FIG. 80.
Side View.

"DEANE" SINKING PUMPS AND PULSOMETER SUSPENDED IN SINKING PIT.

chains or ropes by means of the eyes at the top of the four strong rods, which form part of the framing of the pump.

Figs. 79, 80 and 81 show an arrangement of two "Deane" sinking pumps suspended in a shaft, drawing the water from tanks attached by chains underneath them, which are fed by a pulsometer separately suspended in the bottom of the pit, which deals with the water accruing at this level, and is lowered as the sinking proceeds. The pulsometer will force the water to a height of from 60 to 80 feet, so that practically the pit could be sunk from 20 to 25 yards without having to alter the position of the main pump. The pumps are raised and lowered by means of block and tackle, and afterwards fixed by means of the two short girders as shown.

Figs. 82, 83 and 84 show three views of the Pulsometer Engineering Company's pulsometer, and fig. 85 is a sectional view showing the "Grel" cut-off valve, which has been designed to economise steam, in connection with the pulsometer, with satisfactory results. Its operation, which also sufficiently explains the action of the pulsometer, is as follows:—Commencing at the moment when the left-hand chamber A is full of water, and the steam valve B has moved to close the right-hand chamber C, the expansion valve being open, the full steam pressure enters the left-hand chamber A and partially empties it. Whilst this has been going on, steam has been entering the special chamber D through the orifices E and E^1, thereby increasing the pressure therein, and as the water in the body of the pump falls there is a reduction of pressure outside this chamber, the effect of which is to cause the movable port F of the expansion valve to rise and cut off the steam by closing the steam pipe at G. The expansion of the steam then commences and continues until the chamber A is nearly emptied, when the difference of pressures in the chambers A and C causes the steam valve B to move over, closing the chamber A and opening the chamber C. By this time the escape of the steam from the chamber D permits the pressure of steam in the steam pipe G to depress the valve F, and the steam rushes in to expel in turn the water which has flowed into the right-hand chamber during the emptying of the left-hand chamber. The cut-off and amount of expansion is regulated by means of the two screws H and H^1. The pulsometer is an exceedingly useful and handy pump, and will pump water or mud if not too thick, and the absence of exhaust steam makes it particularly useful for sinking purposes.

Figs. 86 to 90 show the "Denaby" sinking pump, manufactured by Messrs. W. H. Bailey and Co. Limited, which was first designed for the sinking of the Denaby Main Colliery Company's shafts at Cadeby, near Doncaster. Eight of these pumps were in use at one time, each with a capacity of 50,000 gallons of water an hour against a head of 300 ft., the depth of the pits being 600 yards.

As shown in fig. 86, the pump consists of three hollow plungers, the upper

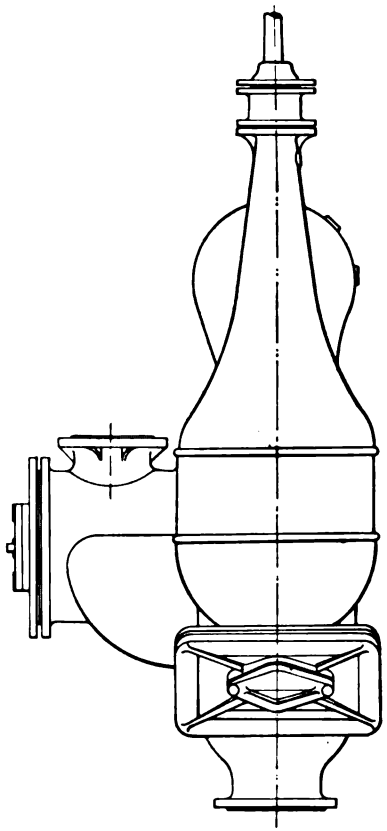

FIG. 82.
Side Elevation.
PULSOMETER.

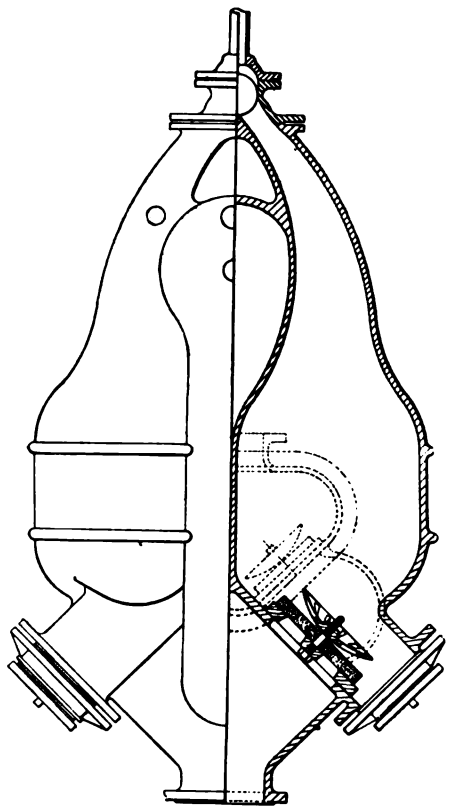

FIG. 83.
Sectional Elevation.
PULSOMETER.

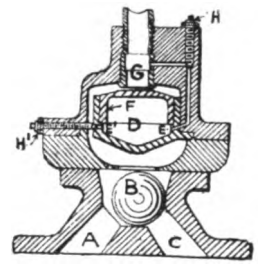

FIG. 85.—"GREL" CUT-OFF VALVE.

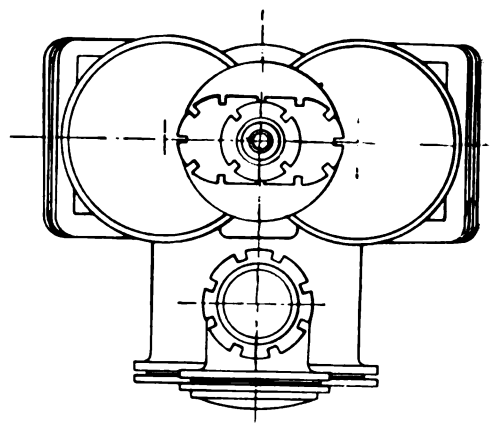

FIG. 84.
Plan.
PULSOMETER.

pair being stationary, and over these slide the two smaller barrels, which are connected to the steam piston. From the lower end of these barrels is attached the large bottom plunger, which works into the lower barrel, which is secured by means of rods to the steam cylinder. There are thus two smaller barrels in connection with the large plunger moving between the large barrel and the smaller plungers, the latter being fixed to the bottom of the steam cylinder. There are two sets of valves, one in the lower barrel, constituting the suction valve, and one at the junction of the small barrels and large plunger, forming the delivery valve. The action of the pump is as follows:—As the bottom plunger rises, the water follows it into the lower barrel, and at the same time the water in the upper smaller plungers is forced into the rising main. On the downstroke the water in the lower barrel is forced through the lower plunger and valve, into the upper barrels and plungers, and thence to the rising main; there is thus a continuous delivery of water.

The steam cylinder is of the "Davidson" type, the steam valve being worked by the levers and rods as shown in fig. 87, and the whole pump is suspended by means of chains or rods secured to strong brackets cast on the cylinder. To suspend these pumps in the pit, two ropes were used, to which are attached at intervals iron straps or rungs, forming a sort of rope ladder, the lower ends of the rope being provided with sockets for attaching to the pump, and the other ends being wound on a drum at the surface. To these straps are fixed, as shown in figs. 91 and 92, the steam and exhaust pipes, with the rising main between. This arrangement, due to Mr. Chambers, which avoids any necessity to fix temporary buntons in the shaft, enables the pump and pipes to be readily lowered or raised as may be required.

An entirely different class of pumps are those manufactured by Messrs. Jos. Evans and Sons, and fig. 93 illustrates their "Straight-Line" differential ram type, whilst the bucket type is shown in fig. 94. In the former a differential ram is attached to the end of the piston rod and works with it, the working barrels and valve casing being fixed. The lower ram is of larger diameter than the upper one, and as the ram rises on the up stroke, the water follows the lower ram, which is displaced on the down stroke, and part discharged into the rising main, and part into the upper working barrel, which is discharged in turn into the rising main on the up stroke by the upper ram. There is thus a continuous flow of water. A retaining valve is fitted to the bottom of the air vessel, which latter is formed by a dip pipe inside the delivery pipe.

In the bucket type pump a bucket or piston is fixed to a continuation of the piston rod, and works in the barrel, which is rigidly attached to the cylinder by a cast iron distance piece, containing the stuffing boxes and glands. At the bottom

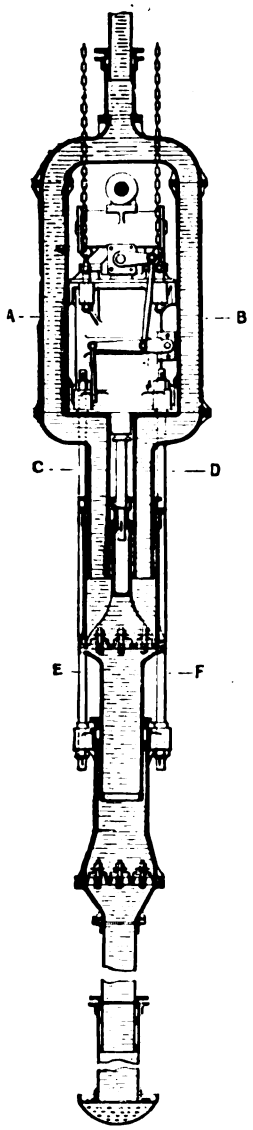

FIG. 86.

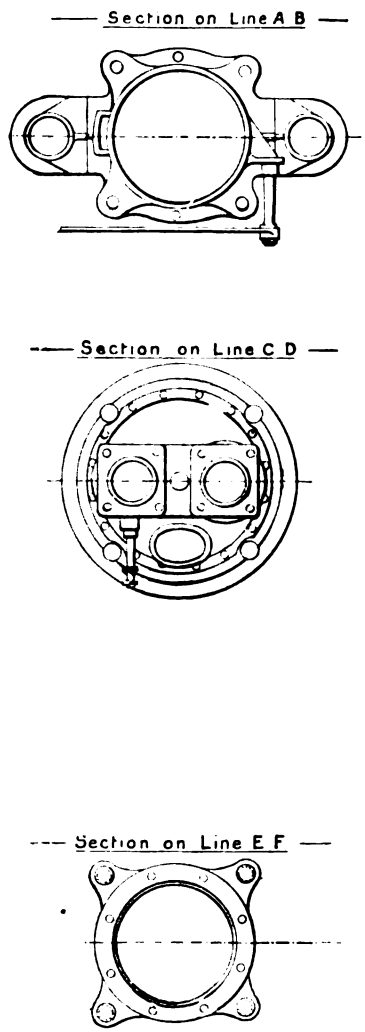

FIGS. 88, 89, 90.

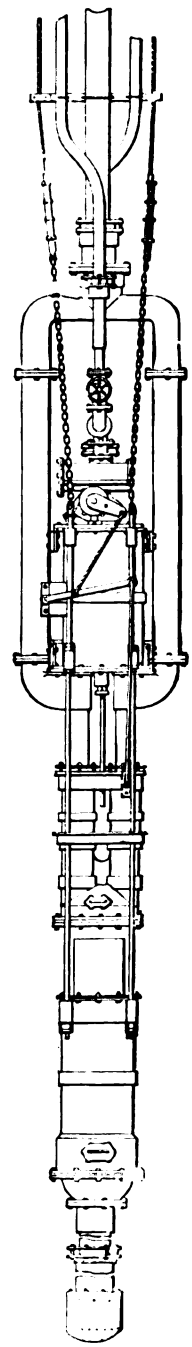

FIG. 87.

SECTIONS AND ELEVATION OF "DENABY" SINKING PUMP.

of the barrel is a hinged cover for withdrawing or examining the bucket. The pump is double-acting, discharging the water direct into the rising main at each stroke. Two suction and two delivery valves are therefore required, which are arranged in a valve casing cast in one piece with, though sometimes separate from, the working barrel, to which is also attached the suspending chains. A separate air vessel is fixed to the upper side of the valve casing.

In both cases the steam cylinders are of Messrs. Jos. Evans and Sons' well-known " Cornish " type, in which the steam supply is controlled by a steam-driven slide valve, no tappets being employed, and, with the exception of the starting handle, there is therefore no extraneous valve gear of any description.

Figs. 95, 96 and 97 show an installation of four pumps of the bucket type

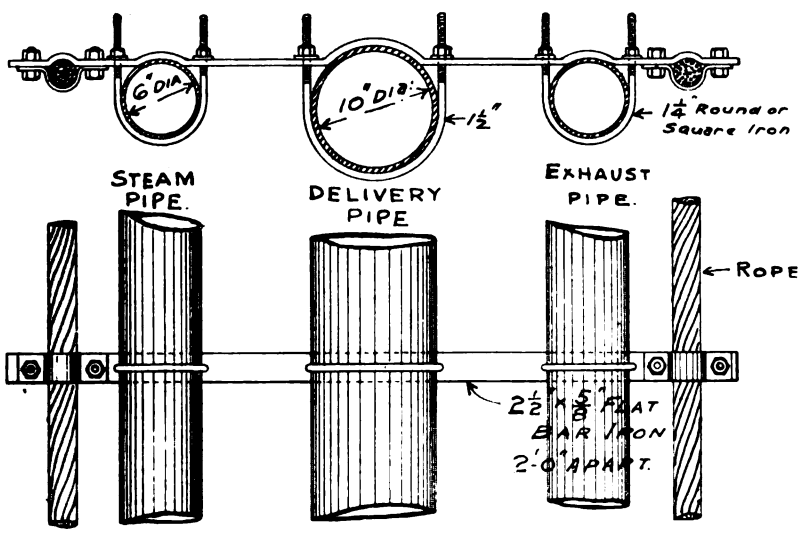

FIGS. 91 AND 92.—ARRANGEMENT FOR SUSPENDING STEAM EXHAUST AND RISING MAIN PIPES.

suspended in a shaft, and capable of dealing with about 5,000,000 gallons of water per twenty-four hours. Each pump has a steam cylinder 28 in. diameter, bucket 16 in. diameter by 24 in. stroke, and is suspended by chains from the heavy cross girders and scotching girders and bars, and raised and lowered by means of blocks and tackle, worked by a winch. The overhead arrangement is interesting, and is designed to allow of one set of blocks being applied to two pumps. As shown, the blocks are suspended from rollers on the cross girder securely braced to the timber frames, and are moved by the screw spindle and nut fixed between the block side plates, the spindle being revolved by the hand chain and sheave.

Figs. 98 to 101 illustrate an installation of three differential ram pumps suspended in the pit, each pump having a steam cylinder 24 in. diameter, displace-

ment of ram 10 in. diameter by 24 in. stroke. In each case the steam, exhaust and delivery pipes are clamped to cross-bars of wood, placed at convenient distances apart.

The pipes used in connection with these pumps should be of steel on account of lightness, and considerable care should be used in making joints, especially

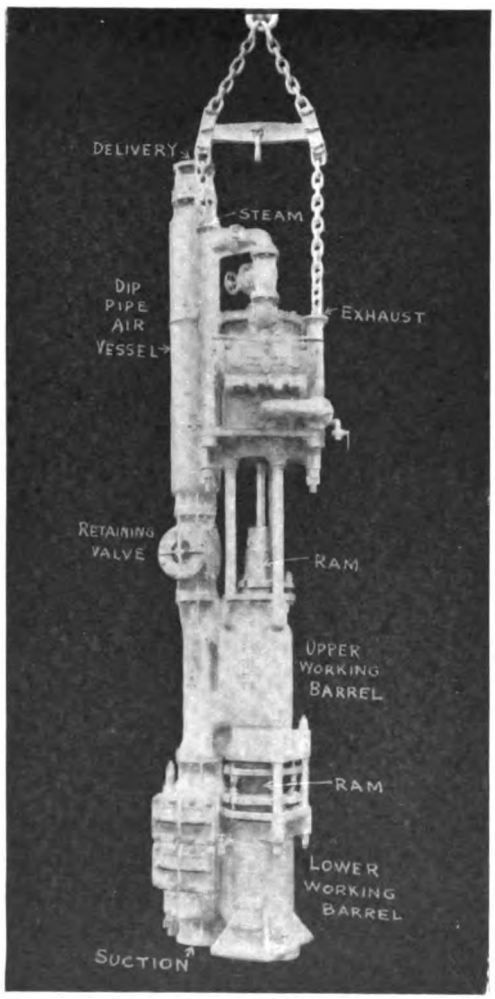

FIG. 93.

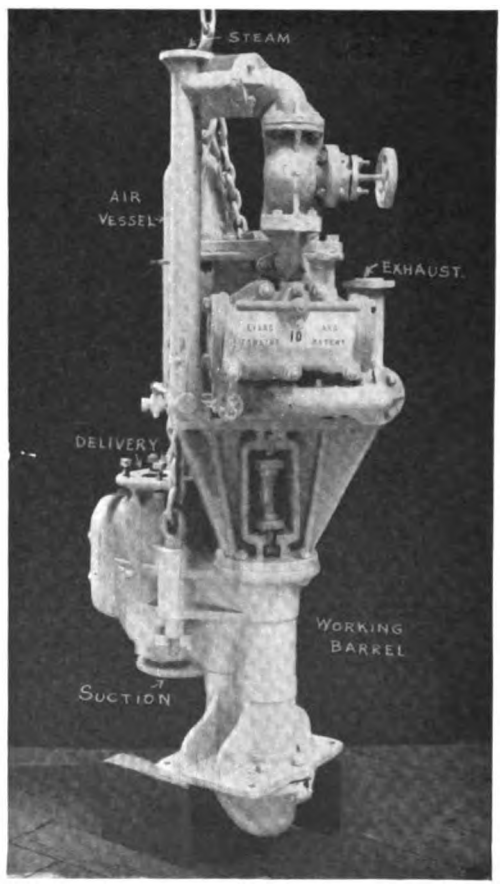

FIG. 94.

steam joints, only the very best quality rubber—as being more reliable than asbestos—jointing rings being used, and a valve should be fitted at the top of the shaft so as to enable the attendant to at once turn off the steam, should it become necessary. A blown-out steam joint might easily result in a very nasty

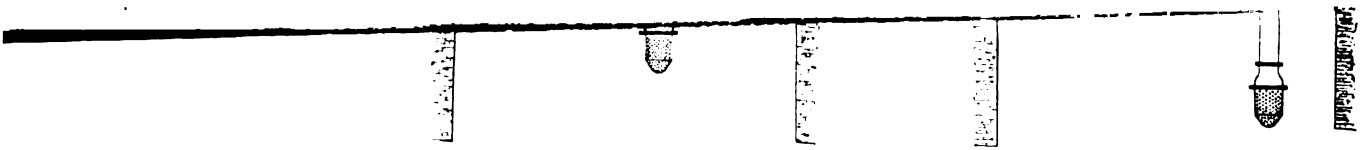

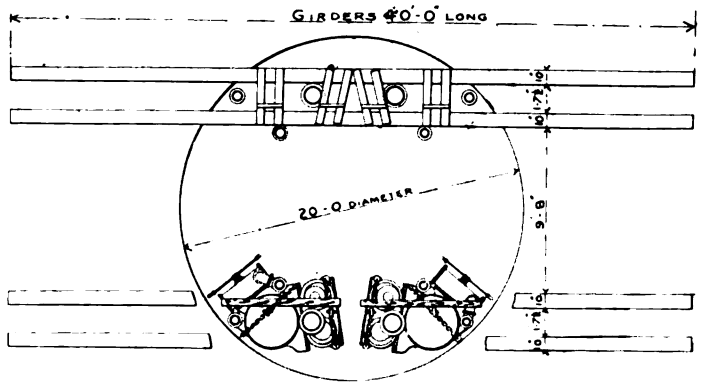

FIG. 97.

Plan of Surface Girders and Pumps.

FOUR BUCKET TYPE SINKING PUMPS SUSPENDED IN SHAFT.

FIG. 98.
Side View.

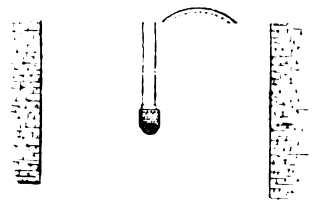

FIG. 99.
End View.

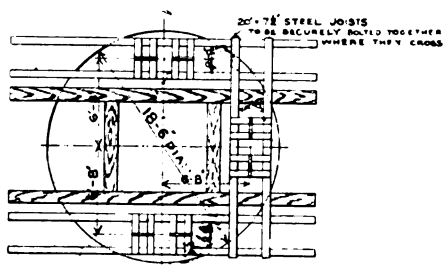

FIG. 100.
Plan of Surface Girders.

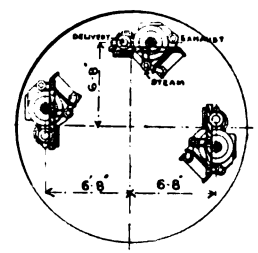

FIG. 101.
Plan of Pumps in Pit.

THREE "STRAIGHT LINE DIFFERENTIAL RAM" TYPE OF SINKING PUMPS SUSPENDED IN SHAFT.

PLATE VI.—*(To face page 57.)*

accident. A sight-feed displacement lubricator should also be fitted to the steam pipe at the surface to lubricate the steam cylinder.

Probably one of the best forms of pipe joints is that shown in figs. 102 and 103, as manufactured by Messrs. James Eadie and Sons, and fitted to their steel pipes. The flanges are loose, and form a spigot and faucet, the latter being deep

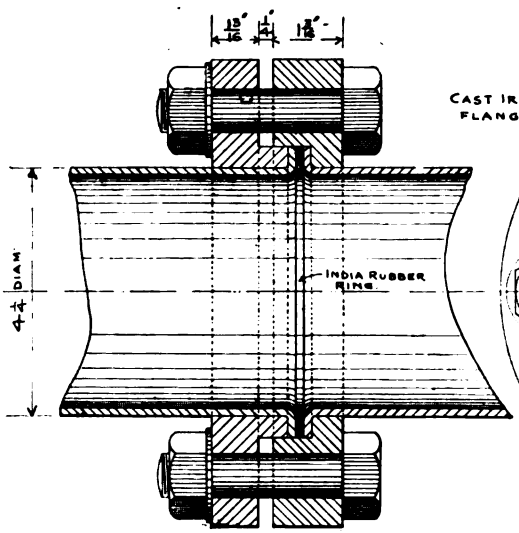

FIG. 102.

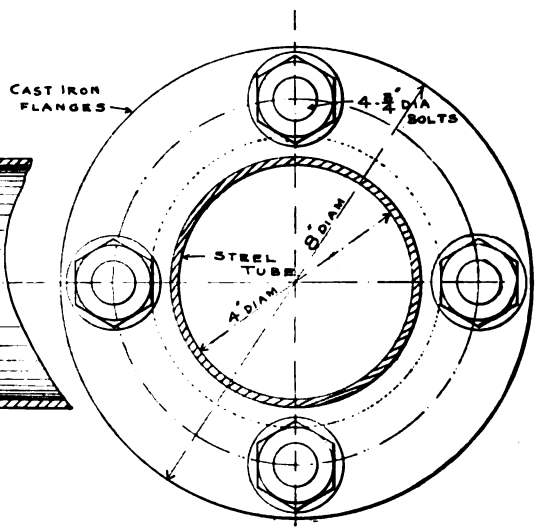

FIG. 103.

FLANGE JOINT FOR LIGHT STEEL PIPES.

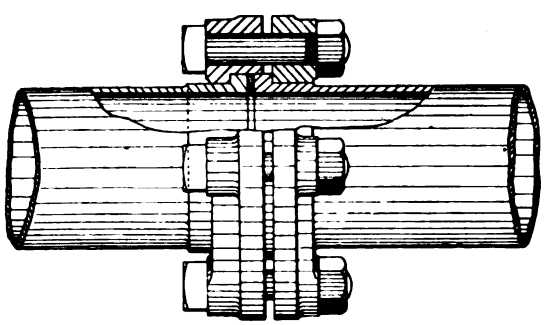

FIG. 104.

Stronger form of Flange Joint for Steel Pipes.

enough to cover the ends of the pipes with the indiarubber ring between. It is thus impossible for the ring to blow out. A stronger flange for larger pipes is shown in fig. 104.

Cast iron pipes for shaft work should have spigot and faucet joints. They are usually made in 9 ft. lengths, and all should be tested by hydraulic pressure, to at least twice the working pressure.

Where sufficient electrical power is available, there is no reason why electromotor-driven pumps should not be used for sinking purposes. The chief difficulty with pumps of this class is to convert the high rotary speed of the motor into the comparatively slow reciprocating speed of the pump, which is usually done by gearing. Electric driving is unsuitable for single- or double-acting plunger or bucket pumps, even if fitted with air vessels. As weight is often an important item, it is questionable if such a pump could be constructed to compare favourably in this respect with a steam pump of equal capacity. It is true no steam or exhaust pipes are in the shaft, but the water delivery pipes are still to be supported, and, in fact, it is conceivable that three columns of pipes may be easier steadied than one, and as a sinking pump is for temporary use only, any claim as to extra efficiency may be neglected. The cables, however, are easily let down the shaft, and the absence of steam and exhaust pipes is also an advantage, inasmuch as there is no danger from blown joints, and only the delivery pipe is to be dealt with when raising or lowering. The motor should be fully enclosed, and if any gas is in the pit—in a flame-tight case—the gearing should be strong, with machine-cut or double helical teeth—the motor pinion being of raw hide, and amply protected by strong covers to protect anything accidentally falling upon or getting into the teeth. The pump should be designed so as to give as constant a load as possible.

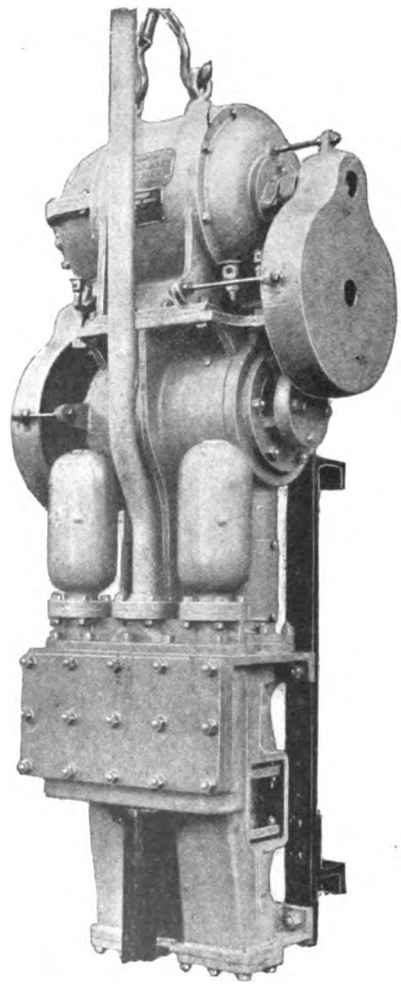

FIG. 105.—ENCLOSED ELECTRIC DUPLEX SINKING PUMP.

A useful type of electric pump is that manufactured by Messrs. the Sandycroft Foundry Company Limited. and illustrated in fig. 105, which is a duplex single-acting pump with a capacity of 2,000 gallons per hour against a head of 300 ft., and in order to equalise the load on the motor as much as possible, is fitted with an air

Fig. 106.

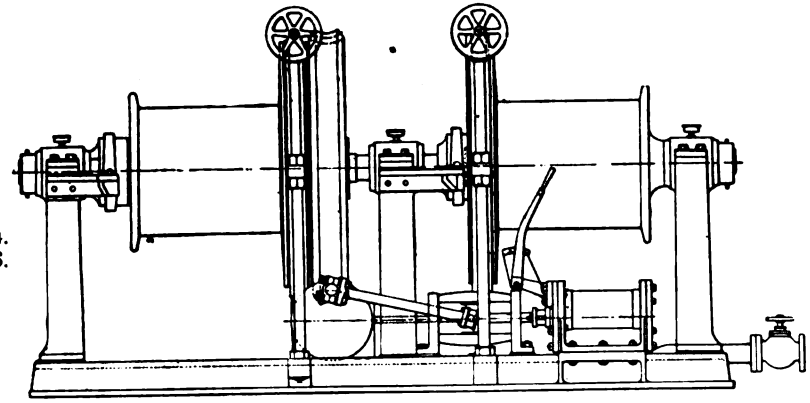

Fig. 107.

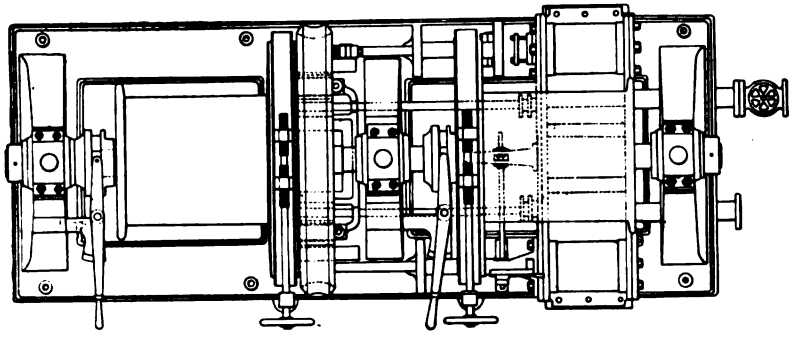

Fig. 108.

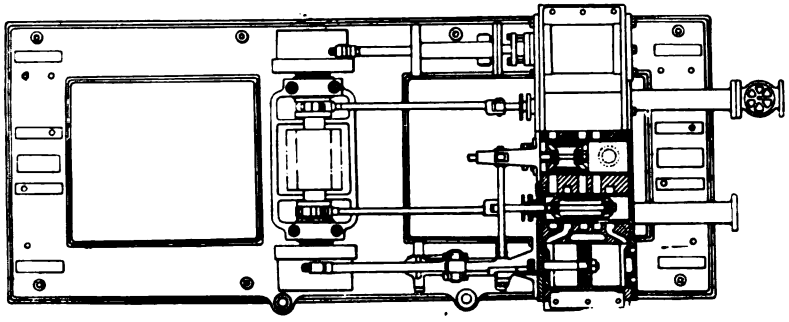

Fig. 109.

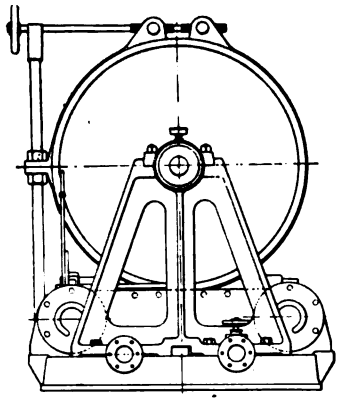

Fig. 110.

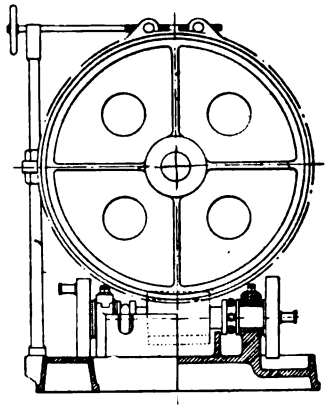

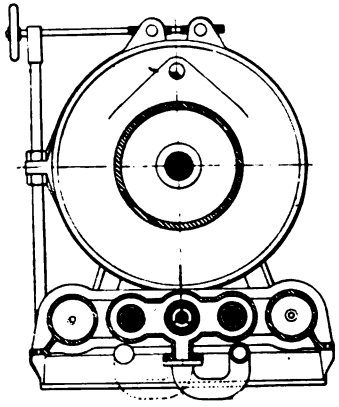

Fig. 111.

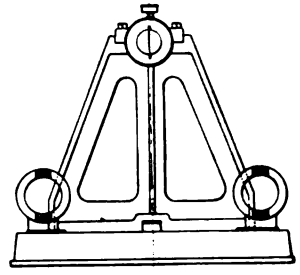

Fig. 112.

Self-contained Crab Engine.

FIG. 113.

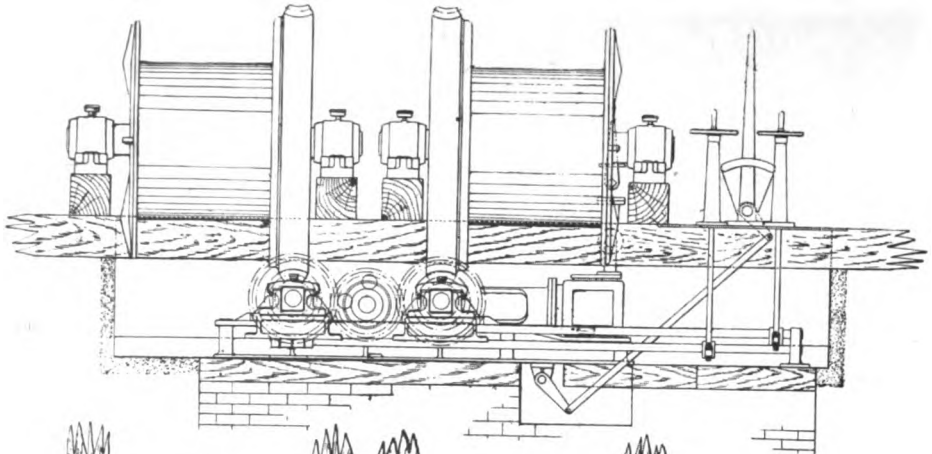

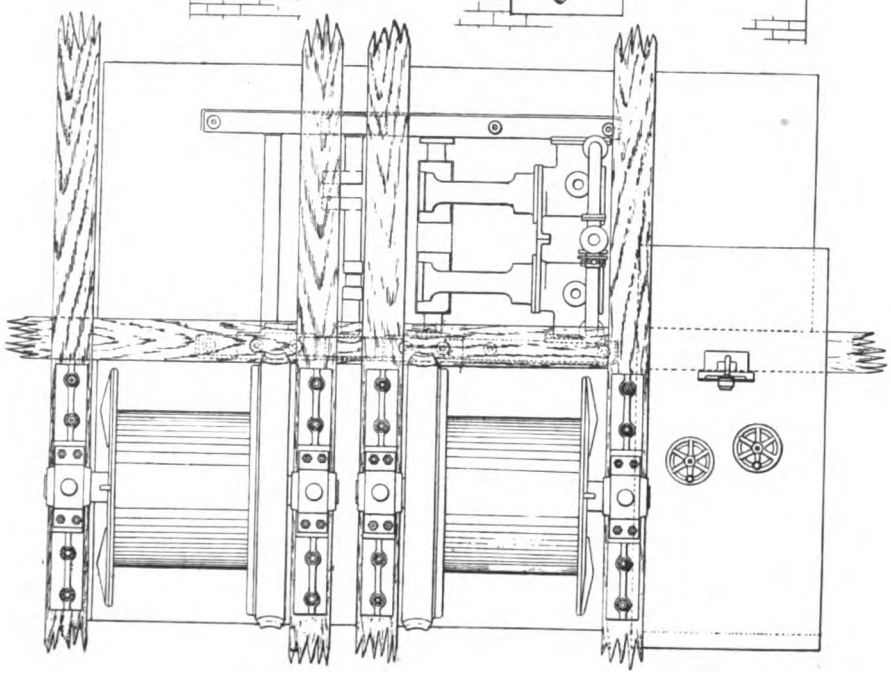

FIG. 114.

FIG. 115.

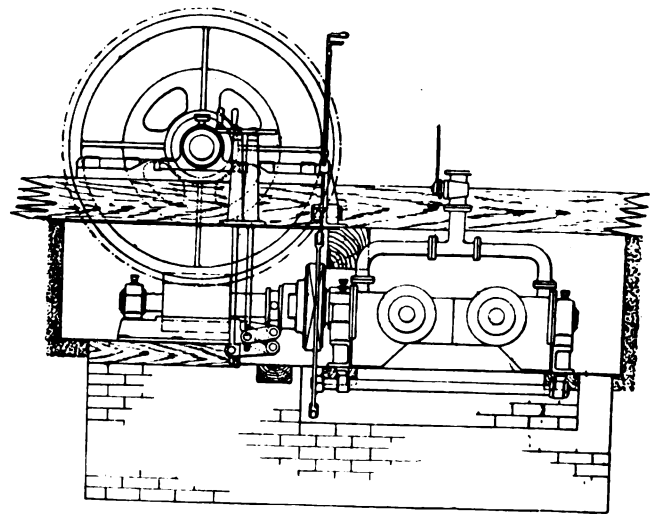

POWERFUL CRAB ENGINE.

vessel to each plunger. As will be seen, it consists of the motor, intermediate casting containing the two-throw crank of mild steel, working in gunmetal bearings and made watertight by means of cast iron glands, and the pump and valve-box casting, which are all securely bolted together and suspended from two eye-bolts in the motor casing. Provision is also made for supporting or hanging the pump to cross buntons. Access to all the valves can be had by removing the single cover on valve box. The plungers are of cast iron, fitted with mild steel plunger rods, with gunmetal nuts at the lower ends and wrought iron crossheads and gunmetal bushes and slippers at the upper ends. Neck bushes and valve seats are all of gunmetal, and the valves are of cast iron, with hard rubber or gutta-percha beats. The connecting rods are of wrought iron, fitted with steel pins at the lower ends and with gunmetal steps and steel bolts at crank ends. The reduction gear wheels are all of cast iron, except the motor spindle, which is of raw hide with brass flanges, and all the teeth are accurately machine-cut. The intermediate shaft of mild steel is provided with loose collars to facilitate getting into and out of place, and brass bushed bearings. The gear wheels are protected by means of light cast iron covers, though these could with advantage be replaced with covers of wrought iron as being not so easily broken. The motor is fully enclosed and damp-proof, and can be supplied for either continuous or three-phase alternating current.

Figs. 106–112 show an extremely useful and handy crab or capstan engine, designed and manufactured by the Uskside Engineering and Rivet Company Limited. The engine, as will be seen, is placed under one of the drums, and drives the latter through worm gearing, so that it is impossible for the drum to slip so long as it is in gear with the engine; moreover, the load can be very gently started and stopped in raising or lowering, and it is not necessary to have to apply the brake immediately in order to hold the load when the steam is shut off. Either or both drums may be put into gear with the engine by clutches, and powerful brakes are provided to hold the drum when out of gear. The engine is interesting, inasmuch as it is fitted with piston valves in place of the usual slide valve, and with internal reversing gear instead of the usual link motion, as shown in figs. 108 and 111. The regulating or throttle valve is also of the piston type, placed between the two slide valves and on the same centre line, and connected with ports so arranged as to admit live steam through either the natural steam or exhaust port to the cylinder, according to the required direction of rotation. It is self-contained on one common bed-plate, and takes up very little space.

A more powerful crab engine by the same firm is that shown in figs. 113–115. In this engine the drums are constructed with heavy cast iron sides and centre support, the lagging being of boiler plate. The worms are forged solid with their

shafts, and the worm wheels are of cast iron, securely bolted to the side of the drum. Each drum may be worked independently, or together, the spur pinions on the worm shaft being provided with clutches for this purpose. No brake gear is necessary, the friction of the worm gearing being quite sufficient to hold the load.

Figs. 116 and 117 show an arrangement for lifting or lowering pumps with a crab engine, by means of block and tackle, enabling a small engine to deal with a very heavy load. After the pump is in position the chains are fixed as shown in detail in figs. 118 and 119.

FIG. 116.

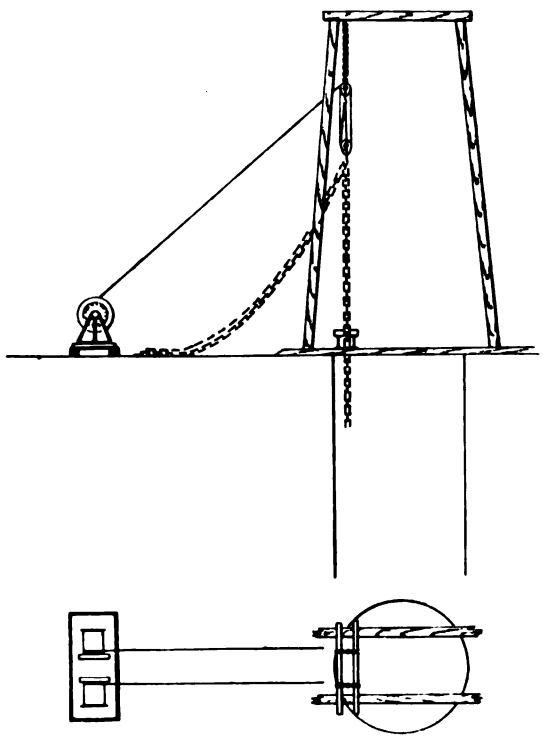

FIG. 117.

SKETCH OF ARRANGEMENT OF CRAB ENGINE AND TACKLE FOR LIFTING OR LOWERING PUMPS.

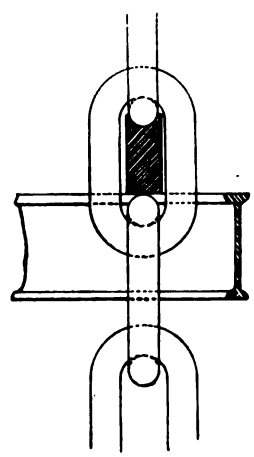

FIG. 118.

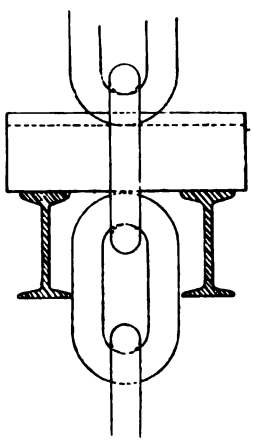

FIG. 119.

SCOTCHING BARS AND GIRDERS FOR SUPPORTING PUMPS.

Another type of crab engine, manufactured by Messrs. John Wood and Sons, is shown in figs. 120 and 121. In this case a pair of engines, arranged singly on either side of the drum, drive the latter through a double reduction of double helical spur gearing. Each engine is attached to side frames, which also support the intermediate shaft and drum, mounted upon a cast iron bedplate, made in

FIG. 120.

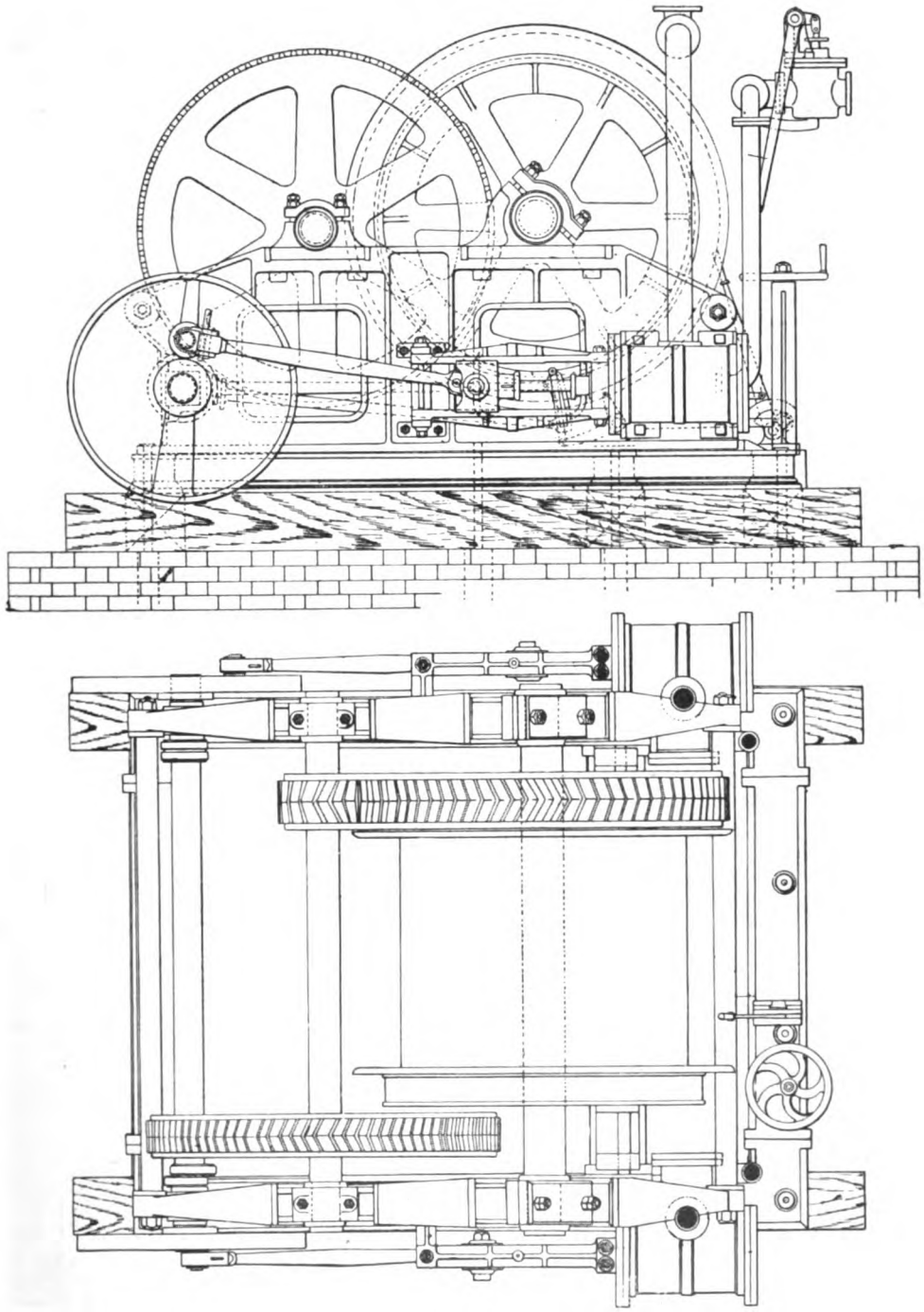

FIG. 121.

ELEVATION AND PLAN OF CRAB ENGINE.

Fig. 124.

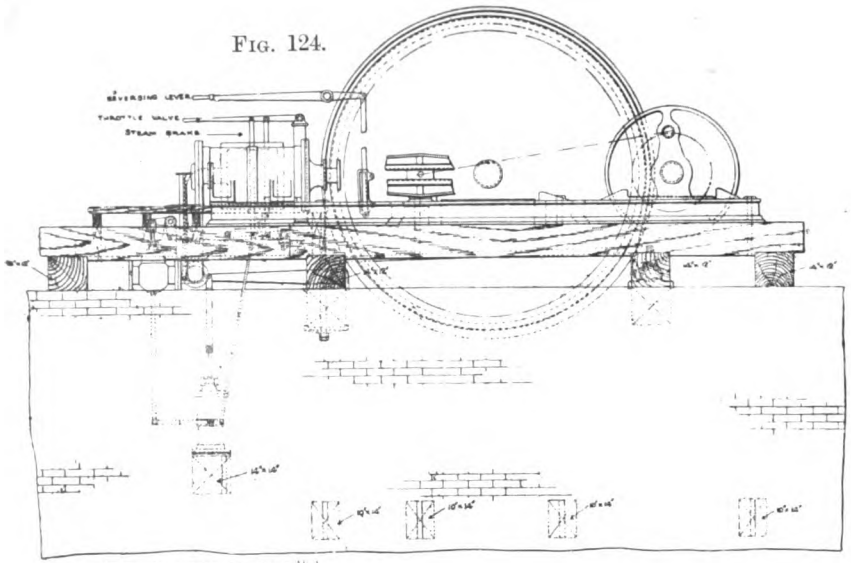

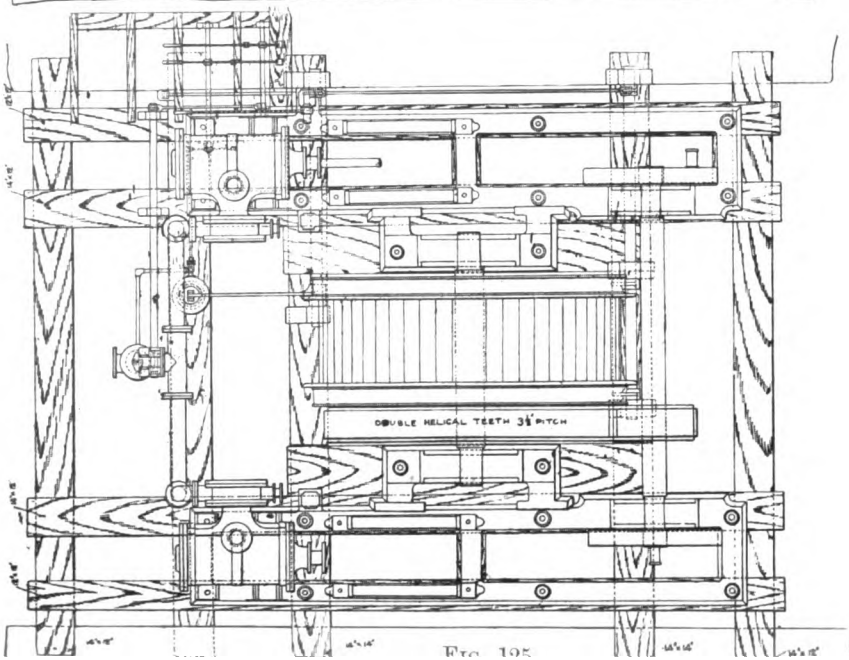

Fig. 125.

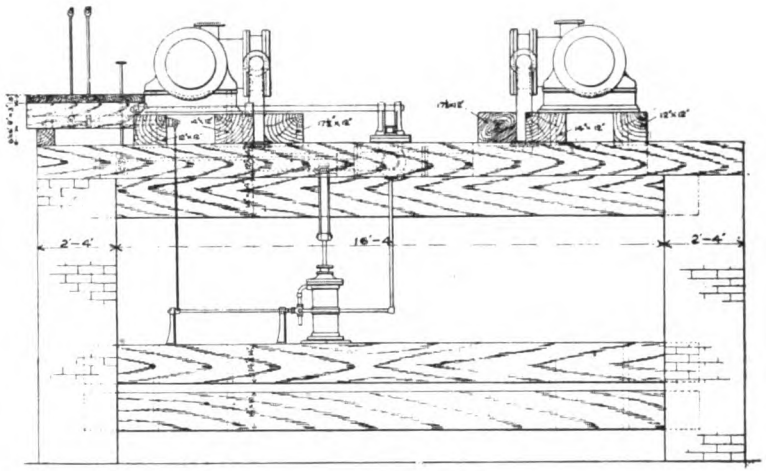

Fig. 126.

Fig. 127.

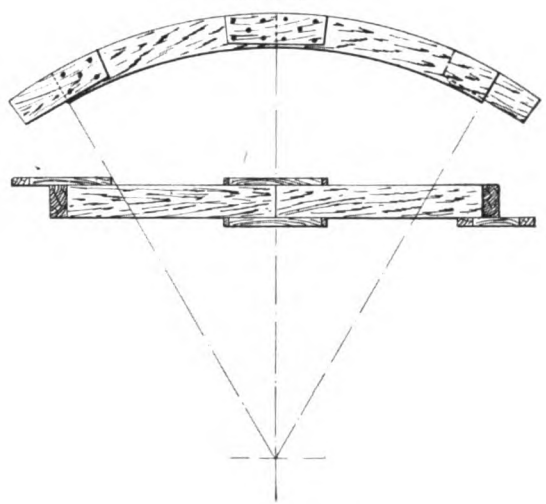

Fig. 128.

sections and bolted together. The drum is fitted with a brake rim and band brake, worked by a hand wheel and screw. The engine is fitted with crank discs, and sometimes in engines of this class the crank discs are also fitted with brakes.

Figs. 122 and 123 illustrate a hand winch or crab, useful for raising and lowering moderate weights, in a sinking pit. The sides are of cast iron, though they are now often made from steel plates. The gearing is arranged for double and single purchase, and the drum provided with a pawl, and brake strap and foot lever. The side frames are bolted to 11 in. × 3 in. deals, which are weighted by any old heavy material to keep the crab from lifting.

Figs. 124-126 show an engine by Messrs. John Wood and Sons, suitable as a temporary winding engine for sinking purposes.

In putting down foundations for temporary engines for sinking purposes, timber is largely used, being readily cut and framed together, and easily taken to

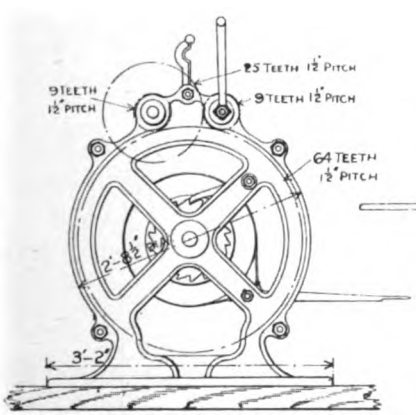

FIG. 122.

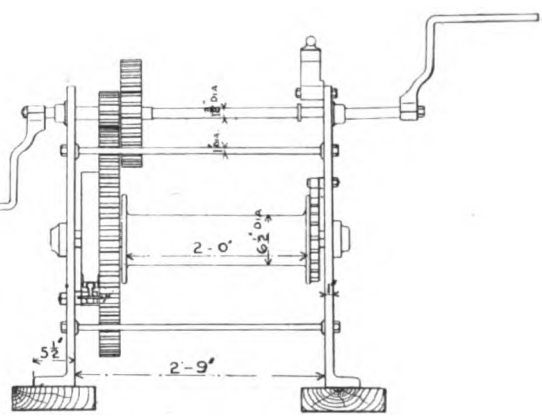

FIG. 123.

pieces again when done with. Pillars built of brick in lime mortar, with a length of timber directly over the foundation bolt holes, which takes the bottom plates and nuts or cotters, and which serves to bind the brickwork together, form an excellent temporary foundation, and easily taken down when done with. A concrete block is not so easily got rid of. What is wanted in a foundation is not so much strength, as is commonly supposed, but weight. Such a foundation is shown in the above sketches, which consists of two brick pillars, 2 ft. 4 in. thick, built on each side of the engine, having strong timbers built in near the bottom for the holding-down bolts. The engine is carried upon longitudinal timbers resting upon cross timbers supported by the side walls, and securely bolted together.

During the process of sinking, temporary crib rings or curbs, of either wood or iron, are necessary to support the sides of the shaft, with a lagging of vertical

FIG. 129.

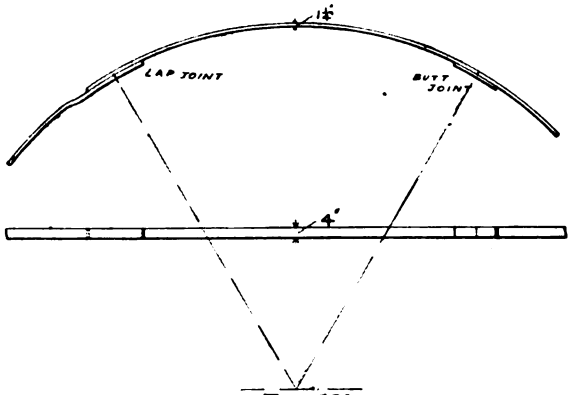

FIG. 130.
WROUGHT IRON TEMPORARY CRIBS.

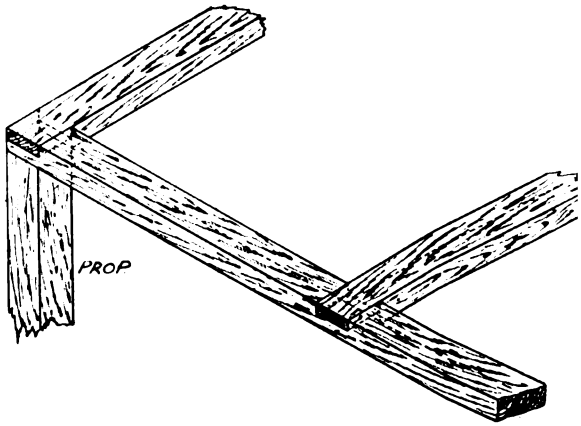

FIG. 133.
WOOD FRAMING FOR LINING RECTANGULAR SHAFT

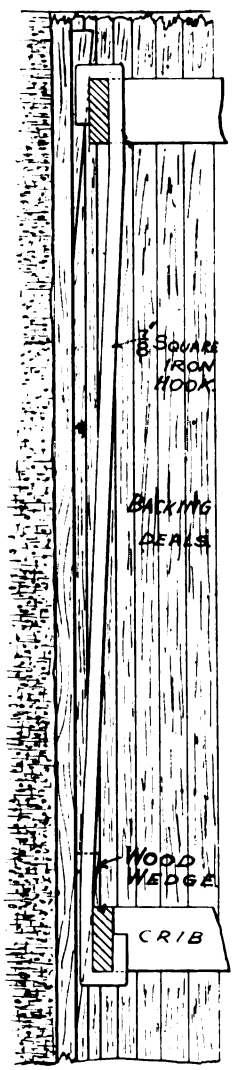

FIG. 131.

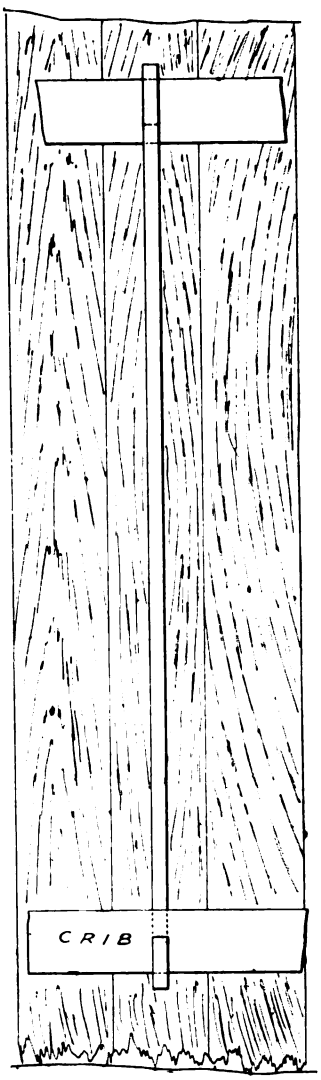

FIG. 132.

METHOD OF SUSPENDING TEMPORARY IRON CRIBS.

boards behind them. Wood cribs are usually of elm, from 4 to 11 inches square, depending upon the size of pit, and the pressure they are to sustain. Figs. 127 and 128 show two views of a wood crib of elm, with the cleats for fastening them together. They may also be built up with 9 × 3 or 11 × 3 inch deals nailed together. Iron cribs are curved from wrought iron bars from 3 to 4 inches in depth, and from ¾ to 1¼ inches in thickness. They are joined together by bolts, either by overlapping at the joints or by attaching butt straps. These are shown in figs. 129 and 130. Wood cribs are suspended by nailing stringing deals on the outside, and iron cribs are suspended from each other by wrought iron hooks of about ⅞ in. or 1 in. square, as shown in figs. 131 and 132.

In preparing cribs a table with a flat surface is formed on the ground, and a circle the size of the shaft drawn upon it; the cribs are then made to this circle, a top and bottom cleat nailed to each, and the joints plainly marked or numbered, so that they may be put exactly together again in the pit.

Rectangular shafts are usually lined with wood, and divided into compartments. Frames of squared timber, half lapped and nailed at the joints, as shown in fig. 133, is probably the cheapest and most commonly adopted method; though in America some expensively framed timbering has been used for this purpose. These are spaced with "props" or distance pieces at varying distances apart according to the nature of the ground, and where the ground is very bad, laid close together. Backing deals of from 1¼ to 2½ inches in thickness are placed behind the frames.

Circular shafts may be lined with concrete, brickwork, or iron tubbing, the latter only being used for heavily-watered strata. Concrete has not so far met with much favour; it has been put forward principally on the ground of cheapness, but it is really questionable if concrete coffering could be put in—as it ought to be—by using only the best materials, proportionately strong, and thoroughly mixed, for very much less than brickwork. Instead of brickwork, sometimes specially-made bricks or lumps moulded to suit the shaft are used.

To find the necessary thickness of brickwork or tubbing required to resist the pressure of water, Professor Galloway, in his "Lectures on Mining," gives the following formula:—

T = Thickness in inches.
D = Internal diameter in inches.
H = Head of water in inches.
W = Weight of a cubic inch of water = 0·036 lb.
R = One-third of the co-efficient of resistance to crushing per square inch of the material employed.

$$T = \frac{W\,H\,D}{2\,(R + W\,H)}.$$

The approximate co-efficients to crushing are given for :—

Cast iron	36 tons per square inch
Brick.....	1,000 lb. per square inch
Cement	3,000 lb. to 5,000 lb. per square inch

which are the materials most commonly adopted. When brickwork set in cement is used, the co-efficient of resistance to crushing of brick only should be taken; and when the quality of the brick is such that it is stronger than cement, then the co-efficient of the latter should be taken.

As an example, suppose a shaft 15 ft. diameter, with a head of water of 500 ft. Find the required thickness of brick and cast iron tubbing.

$D = 15$ ft. $= 180$ in.
$H = 500$ ft. $= 6{,}000$ in.
$W = 0{\cdot}036$ per cubic inch.
$R = 333$ lb. per square inch for brick.
$= 26{,}880$ lb. per square inch for cast iron.

$$\text{Brick.}\quad T = \frac{0{\cdot}036 \times 6{,}000 \times 180}{2\,(333 + 0{\cdot}036 \times 6{,}000)} = 32 \text{ in.}$$

$$\text{Cast iron.}\quad T = \frac{0{\cdot}036 \times 6{,}000 \times 180}{2\,(26{,}880 + 0{\cdot}036 \times 6{,}000)} = {\cdot}717, \text{ say, } \tfrac{3}{4} \text{ in.}$$

As, however, it is practically impossible to get perfect castings, it will be necessary to increase the thickness as given in the last example to allow for this, and to err on the safe side the result as given by the formula should be increased from one and a-half to two times; so that the thickness of the tubbing in the example given would be $1\frac{1}{2}$ in. This does not apply to brickwork, as each brick only forms a very small part of the whole, and moreover may be selected, so that there is not the same risk of imperfections or flaws being introduced into the coffering.

Various methods of brick coffering have been adopted. Much, of course, depends upon the class of brick used, and, as Professor Galloway says, the coefficient to crushing ought to be determined by actual experiment. Ordinary red bricks burnt in open kilns are objectionable, as they are damaged by frost, and do not last long. If ordinary composition bricks are used, they should be specially burnt hard, and carefully selected, and if the pit is fairly dry, make a very good lining. A better and more permanent lining is obtained with the hard blue brick of the Midlands, set in one-to-one or neat cement. Each section or length of walling is usually commenced by placing a cast iron crib ring bolted together, as shown in figs. 134 and 135, on the ledge of rock, as a foundation. A water or garland crib ring is similar in construction, but is provided with a ledge as shown in figs. 136-9, and furnished with a boss to which a pipe may be fixed, for conducting away the water intercepted by the gutter formed by the ledge and the side of the shaft. Another form of water crib ring is shown in figs. 140-2, and a wedging-crib or curb is shown in figs. 143-5.

FIG. 134.

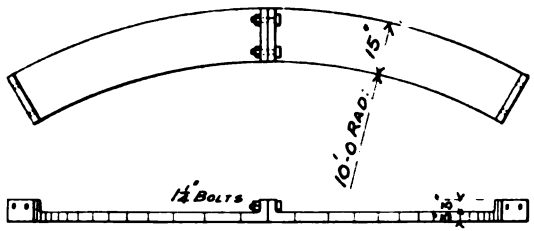

FIG. 135.
WALLING CRIB RING.

FIG. 136.

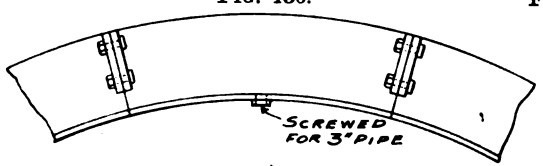

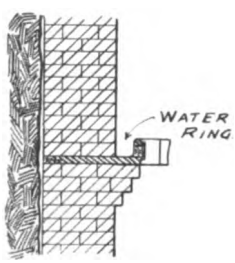

FIG. 137.

FIG. 138.

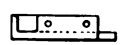

FIG. 139.

WALLING GARLAND CRIB RING.

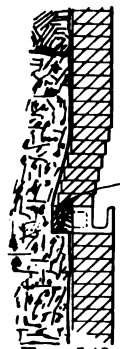

FIG. 142.

FIG 140.

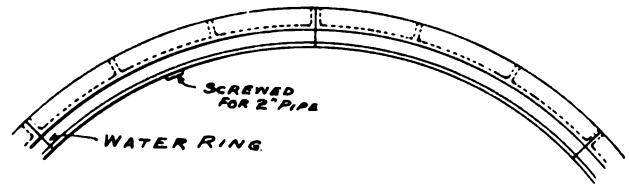

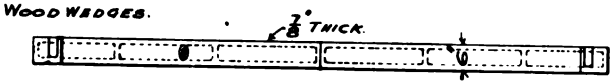

FIG. 141.
WALLING WATER RING.

FIG. 143.

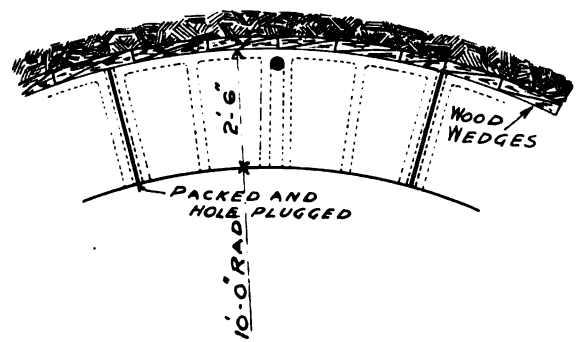

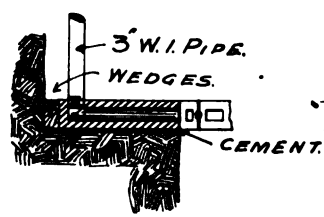

FIG. 144.

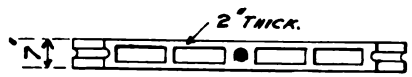

WEDGING CURB FOR TUBBING.

FIG. 146.

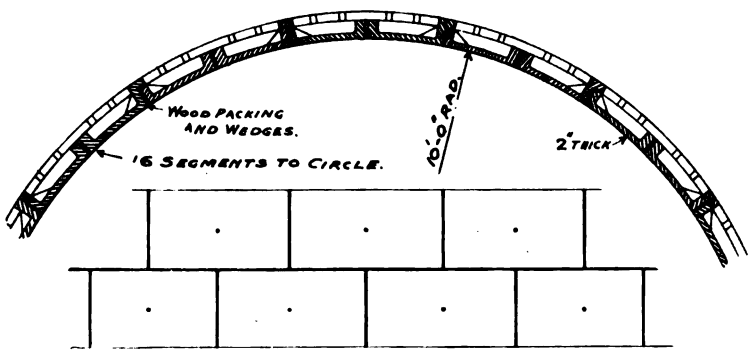

FIG. 147.

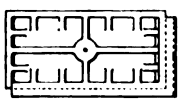

FIG. 149. FIG. 148.

CAST IRON TUBBING.

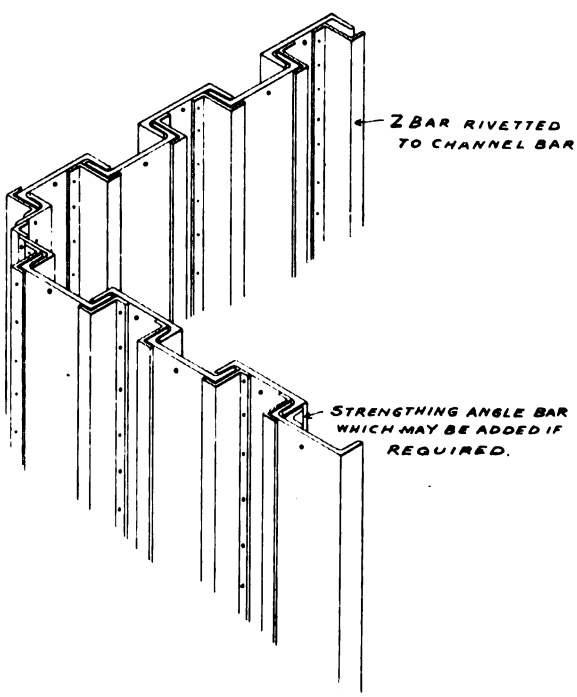

FIG. 150.

INTERLOCKING CHANNEL BAR PILING.

In lining shafts where water is given off from the sides, some means must be adopted whereby the water is collected and conducted to the sump. Water accruing above the walling may be collected in a temporary wood water ring until reached by the brickwork, after which it is conveyed in iron or wood pipes, perforated with holes—which are plugged as the brickwork is carried up—behind the walling, such a pipe being shown fixed into the wedging curb in fig. 144, or wood—or what is better, cast iron—blocks are built into the walling, with a hole in the centre, through which the water flows until the lining is completed, after which they are plugged, and the whole of the water tubbed back.

Cast iron tubbing consists of segmental rings of cast iron specially made to fit the shaft, varying from 3 to 4 feet in length, and from 1½ to 3 feet in height. A flange is formed on one side and one end at the back, as shown in fig. 148, and each segment is strengthened with ribs and brackets at the back, and provided with a hole in the centre. This hole is for relieving the pressure of water behind the tubbing during the time it is being built together. The foundation for tubbing consists of a wedging curb shown in figs. 143-5, which is carefully bedded on the rock some distance below the previous strata. Thin strips of wood are laid between the vertical and horizontal joints of the tubbing, and after a section has been completed these joints are wedged by the workman making an opening with a chisel,

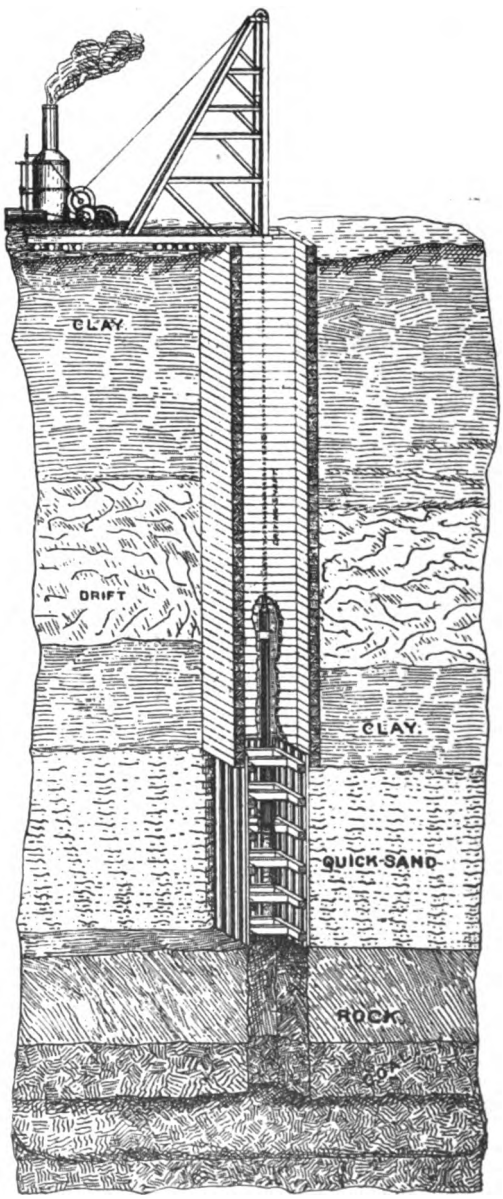

FIG. 151.

DRIVING INTERLOCKING CHANNEL BAR PILING THROUGH QUICKSAND.

and driving in hard wood wedges until no more can be driven. The top ring of a section of tubbing which has been built up until it nearly reaches the wedging curb of a higher section, is called a "closer," and is cast specially to the required dimensions.

In sinking through bad ground and quicksand, piling is resorted to, and fig. 150 shows a new form of piling with interlocking channel bars, particulars of which have been supplied by the Interlocking Channel Bar Company, of Chicago. As will be seen, it consists of ordinary channel bars, with a Z bar riveted to each

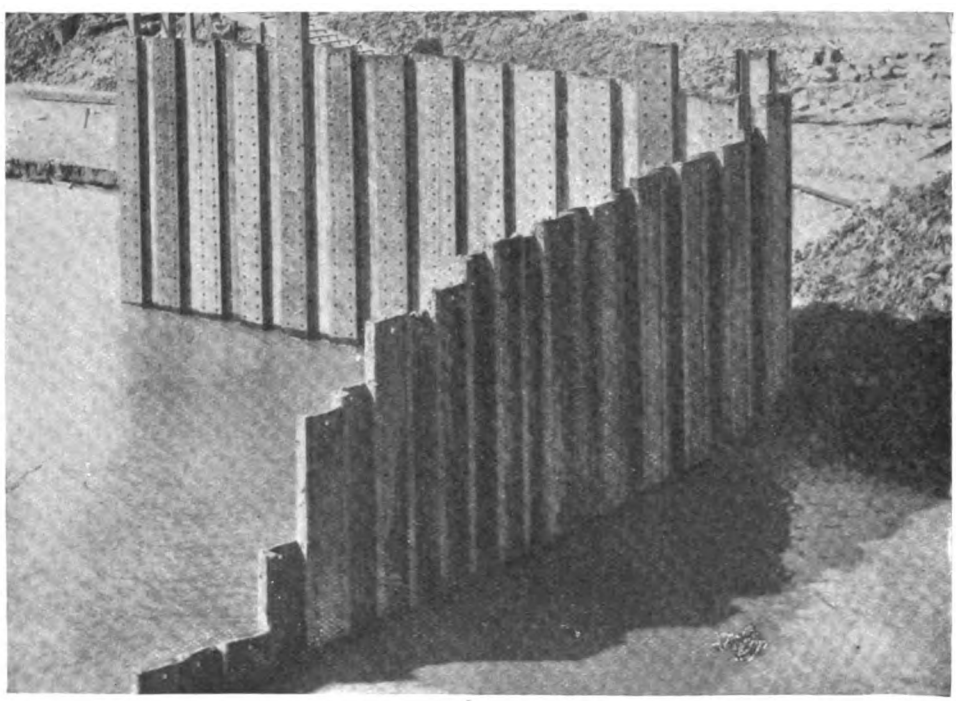

FIG. 152.—INTERLOCKING CHANNEL BAR PILING.

alternate one, and may be further strengthened by the addition of angle bars as shown in fig. 150. These bars are driven by means of a pile driver until hard rock is reached, when the interior may be easily and safely excavated. They are arranged first of all in position, enclosing the required area to be excavated, by means of a strong wood frame, and each bar is then gradually driven about 2 ft. at a time until the required depth is reached—a special anvil being fitted to the top of the bar being driven. Fig. 151 shows a diagrammatic sketch of this piling being driven in a rectangular shaft. Fig. 152 is from a photograph of the piling as

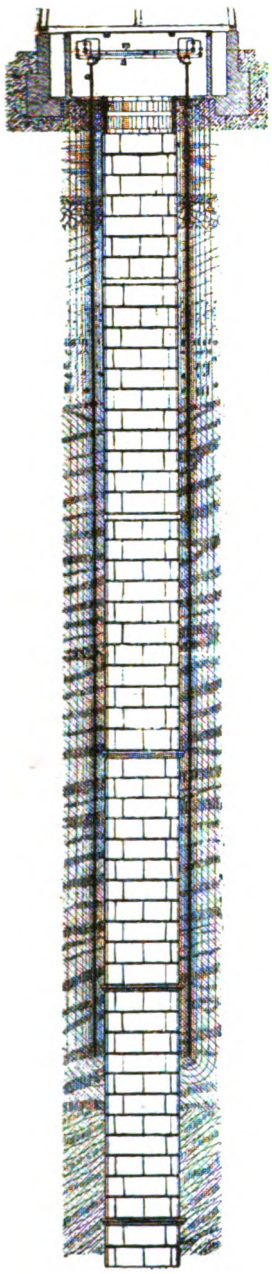

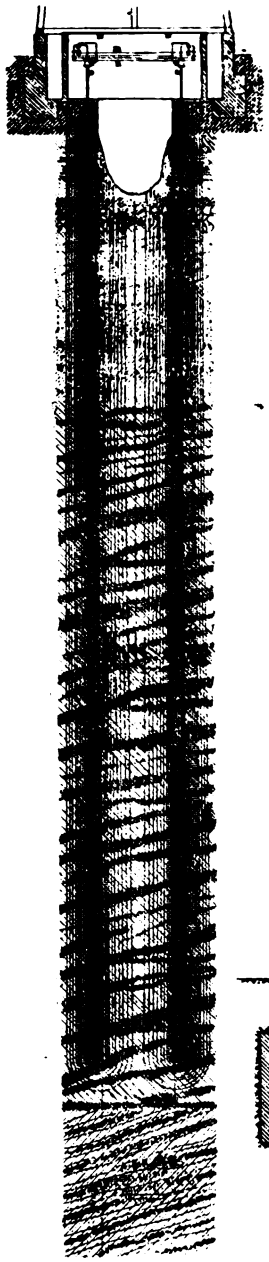

Fig. 154. Fig. 155.

Freezing Process of Shaft Sinking.

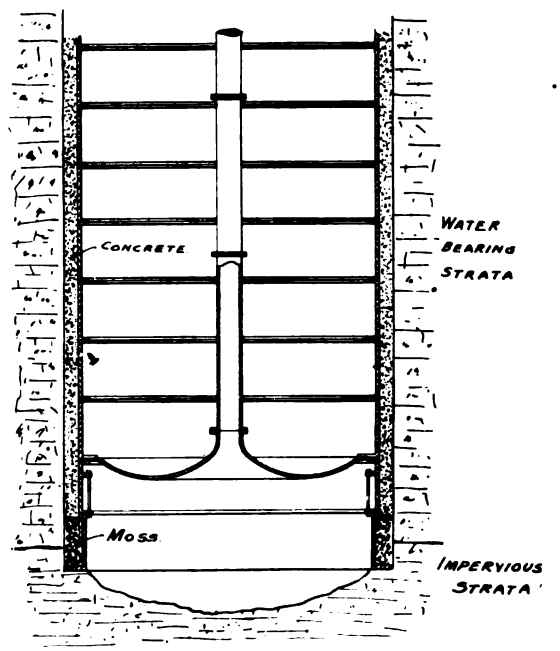

Fig. 153.—Kind-Chaudron Tubbing.

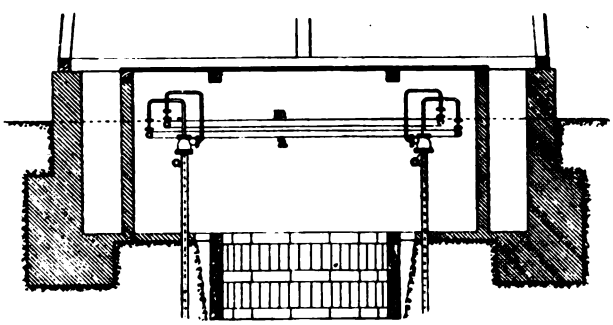

Fig. 156.—Freezing Process of Shaft Sinking.

Enlarged view of pipe arrangement at top of shaft.

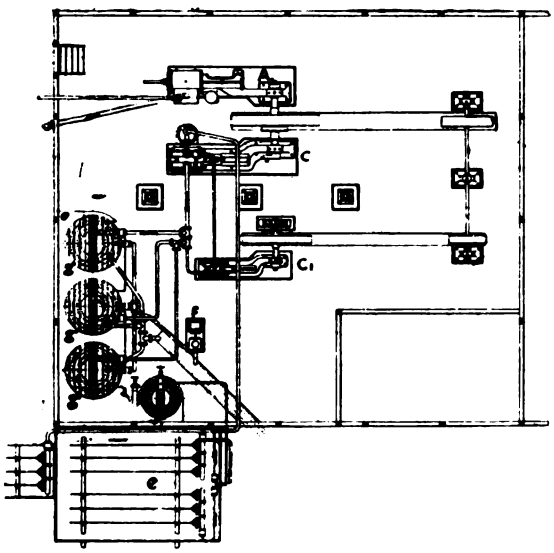

FIG. 157.—PLAN OF FREEZING PLANT.

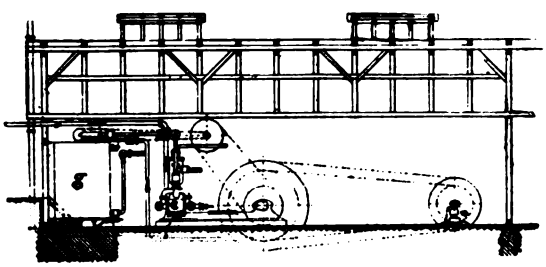

FIG. 158.
SECTIONAL ELEVATION OF FREEZING PLANT.

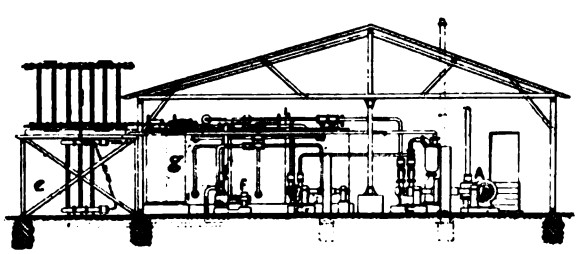

FIG. 159.—END ELEVATION OF FREEZING PLANT.

FIG. 163.

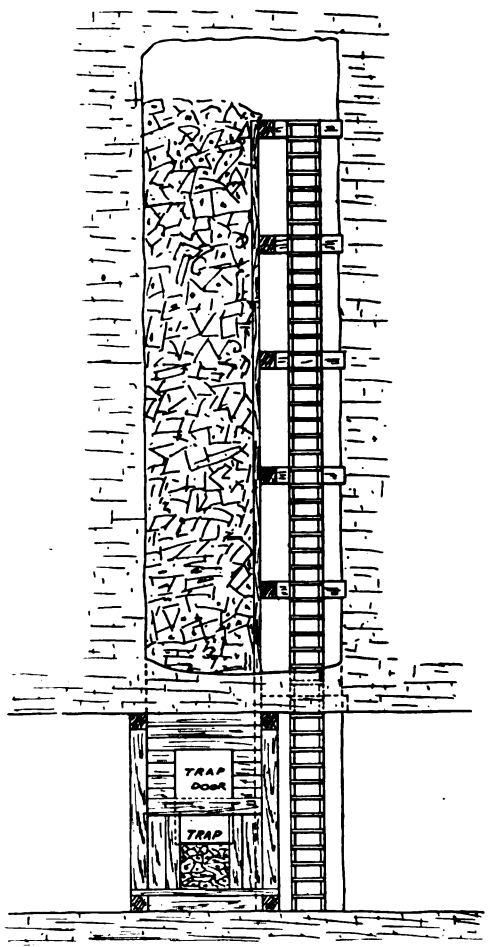

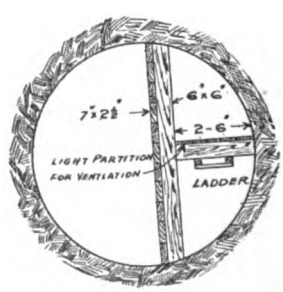

FIG. 164.
ARRANGEMENT OF UP-OVER SINKING.

applied to a cofferdam, which clearly shows its construction and method of application. If necessary, packing strips can be caulked between the joints of the interlocking edges, so as to render them watertight. This system may be applied equally as well to circular shafts as to rectangular, and is considerably cheaper than sinking cast iron cylinders.

The Kind-Chaudron system of sinking is only applied where the quantity of water given off by the water-bearing strata cannot be dealt with by pumping. As is now well known, it consists of boring out the shaft to the required diameter, by means of a huge boring tool or "trépan," worked by a balancing beam, and steam cylinder on the surface. A small hole is bored first, the *débris* being removed by a sludger, as described in the chapter on boring, and the *débris* formed by the large "trépan," which is shaped somewhat like an inverted cone, falls into this hole and is extracted by the sludger or collected in a kibble, placed therein for the purpose. Heavy wood rods connect the "trépan" to the balancing beam. The shaft is lined with cylindrical tubbing, built up in sections on the surface, and which is fitted at the bottom with a special arrangement of two cylinders, one sliding within the other, and packed between the flanges with moss, as shown in fig. 153, which is compressed and forms a watertight joint by the weight of the tubbing above it.

The system of sinking shafts by freezing has only recently been introduced into this country, and figs. 154 to 159 illustrate the system of Messrs. Gebhardt and Koenig, of Nordhausen, kindly supplied by Mr. A. I. Lichtenhein. Fig. 155 shows the shaft in process of sinking, whilst fig. 154 shows the sinking completed and the shaft lined with tubbing, the plant employed being shown in the three views figs. 157, 158 and 159, and fig. 156 shows in larger detail the arrangement of pipes at the top of the shaft, which conduct the freezing liquid into the freezing tubes.

A number of boreholes at a distance from the centre somewhat greater than the size of the shaft, are first bored to any required depth, and in these holes the freezing tubes are placed. These consist of a tube about 4 in. diameter sealed at the bottom, and a smaller inner one about 1 in. diameter opening into the larger one below. These are connected with valves at the top to the inlet and outlet pipes M, N, as shown in fig. 156, O being the freezing tubes. The freezing machinery consists of an engine A, fig. 157, driving by belts and countershaft the two compressors C and G, which compress the freezing liquid—anhydrous liquid ammonia—up to about 150 lb. per square inch, in two stages, at which pressure it becomes gaseous. It then passes to the condensers, consisting of 4,800 ft. of 1 in. tube, around which 4,000 gallons of fresh water circulates per hour, being constantly stirred with paddles, which cool the gases until they again become

liquid; and in this liquid state it is conveyed to the refrigerating coils *g*, and thence back to the compressors. Before entering the refrigerating coils, however, it is passed through two reducing valves, which lowers the pressure to 14 lb. per square inch, and thus reduces the temperature. The three refrigerating coils each contain about 2,000 ft. of 1 in. tube, through which the cooled liquid flows, and which is surrounded with brine, constantly stirred by paddles, and it is this brine which is forced down the tubes surrounding the shaft by the force pump F, first

FIG. 160.—PREPARING FOR TUBBING IN FROZEN SHAFT.

passing into M, fig. 156, down the 1 in. tube, and returning slowly up the larger tube into the collecting pipe N, and back to the refrigerators, where it is cooled over again. The frozen wall is thus maintained until the pit is sunk to the required depth and lined with tubbing.

Figs. 160, 161 and 162 are from photographs of frozen shafts, carried out by Messrs. Gebhardt and Koenig, which are interesting. Fig. 160 is from a shaft nearing completion, the workmen dressing the sides for fitting the tubbing, which

is clearly shown. Figs. 161 and 162 are from a drowned shaft which was saved by the freezing process, and fig. 161 is especially interesting, showing the channel bar crib rings and joints, and backing deals and wedges. During the sinking of

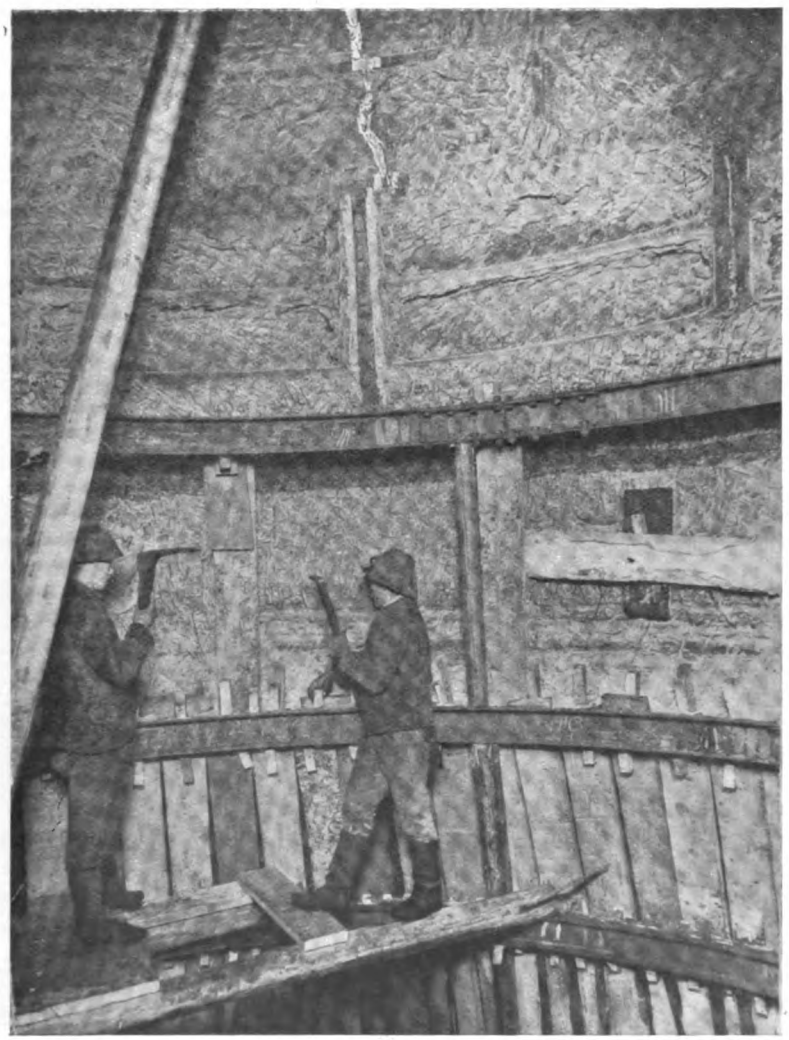

FIG. 161.—TEMPORARY CRIB RINGS AND BACKING DEALS IN FROZEN SHAFT.

this shaft, the tubbing was cracked, as shown in fig. 162, and as the action of the frost, in consequence of contraction and expansion, are likely to result in cracking existing tubbing, Messrs. Gebhardt and Koenig have patented an improvement

whereby they insulate the freezing tubes down to the level of the tubbing, and enables them now to give a guarantee of freezing shafts without any injury whatever to existing tubbings.

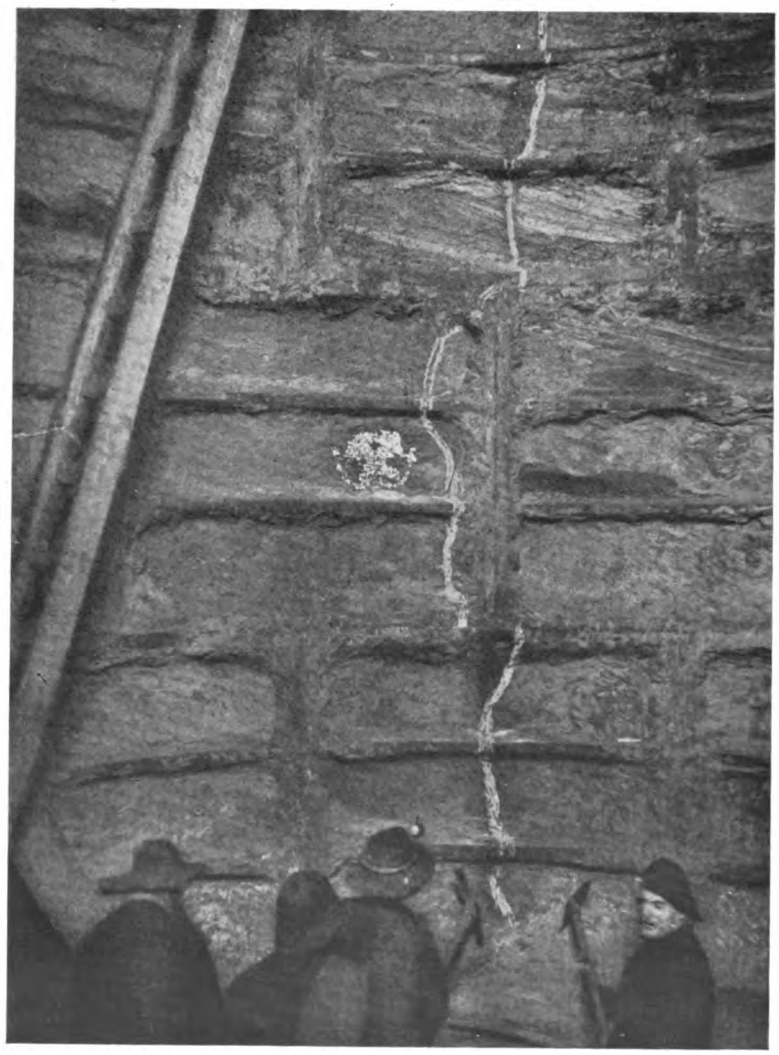

FIG. 162.—CRACK IN FROZEN SHAFT.

It is often necessary, in order to connect one seam with another in underground operations to sink a staple from the lower seam up over, and figs. 163-4 show a sectional elevation and plan respectively of an arrangement for carrying out this

work. The shaft is divided by two partitions into three spaces, the larger being kept full of the material as it is excavated, and serves the purpose of a platform upon which the sinkers work. The two smaller divisions are for the purpose of ventilation, one being fitted with ladders as shown. As considerable weight is against the larger partition, this is formed of strong timbers, 6 in. × 6 in. buntons, spaced about 3 ft. apart, with stays at right angles, the latter forming the smaller partition, and to which the ladders are fixed. The cleading of the larger partition is formed of 7 by $2\frac{1}{2}$ in. battens securely nailed longitudinally, whilst the small partition may be of thin wood or brattice cloth. At the bottom of the staple a trap is formed fitted with a sliding door, and the *débris* is removed as required, to keep the tip low enough to give the workmen sufficient height. The two smaller openings are temporarily covered with pieces of timber, set at as great an angle as possible before shots are fired. The ladders may be of wood or iron, the latter being made from $1\frac{3}{4}$ by $1\frac{3}{4}$ by $\frac{1}{4}$ in. angle bars, with $\frac{3}{4}$ in. diameter rings riveted in, and made in suitable lengths. Wood ladders are formed by nailing $2\frac{1}{4}$ to 3 inch square runners to the cross buntons, and nailing the rungs to the runners. After the staple is through, the material is removed by means of the trap door, and the buntons and partitions removed as the *débris* is lowered. Where the staple has to be lined with brick walling, a sheave is first fixed at the top, over which a rope passes, worked by a small hand winch below, and by which means the workmen and bricks and mortar are raised. The permanent buntons would be built in as the walling proceeds, and upon which the walling scaffold is supported.

Bibliography: *Transactions* of the Federated Institution of Mining Engineers; *Transactions* of the North of England Institute of Mining and Mechanical Engineers; Institution of Civil Engineers; Institution of Mechanical Engineers; *Proceedings* of the South Wales Institute of Engineers; *Lectures on Mining*, by W. Galloway, F.G.S.; Callon's *Lectures on Mining*; *Colliery Guardian*. Vol. lxxxv., p. 685, for article on "Shaft Linings." For sinking through swamp and sand with a Priestman grab, see *Transactions* North of England Institute of Mining and Mechanical Engineers, Vol. xx.; *Colliery Guardian*, Vol. lxxxvii., p. 489, Kind-Chaudron system of Sinking.

CHAPTER III.

SURFACE ARRANGEMENTS.

In laying out the surface arrangements of a colliery, it is impossible to lay down any hard and fast rules, as so much depends upon circumstances, local conditions, and the quality of coal being worked. It does not depend so much upon the output -- except in so far as with a larger output the arrangements would be designed on a larger scale—as, whether the output be large or small, somewhat similar surface arrangements are required. There will be the two shafts, winding engine, ventilating fan, pumping machinery, boilers, heapstead, screening and picking plant, electric lighting, cabins and workshops, railways, and possibly sidings, washing plant, locomotive shed, &c., all to arrange for; and to do this, so that the coal may be quickly and easily handled from the pit's mouth into the railway wagons, with the least amount of labour and smallest expenditure of capital, requires much careful consideration.

At the outset the position of the pits, and arrangement of the cages in the shaft, are practically determined by underground conditions, but beyond this, with possibly the exception of the position, or nearness, of the main railway line, there is nothing (except want of capital) to interfere with the laying-out of the surface arrangements. At the same time it is necessary to study and take advantage of the natural contour of the ground, local conditions, and the utilisation of the material excavated during the sinking of the pits, if necessary.

The position of the cages being fixed, the winding engine will be placed either at one end or the other, preferably the loading end, so that the engineman may see the empty tubs put into the cage. Whether both pits are arranged for winding will of course depend upon the quantity required, which also affects the question of decks and method of changing. The heapstead or pit bank will be arranged so that the full tubs will gravitate from the cages over the weighing machine to the tipplers where they are emptied, and from there they will be raised by a creeper high enough to allow them to run back to the other side of the shaft, ready to be put into the cage again. Each tippler will deliver the coal on to a shaking or jigging screen, which will separate or classify the coals either wholly or in part, and discharge the coal on to belts placed below them, by which means it will be conveyed, the dirt and *debris* being picked out as it is carried along, and finally deposited into trucks at the end.

The arrangement of railways under the screens will depend upon the number of classes of coal, but preferably there should be a separate line for each class, with another, or a by-pass, to allow the empties being pushed up to higher ground behind the pit, from whence they will gravitate to the screens where they are loaded, and thence to the weighing machine placed some little distance from the screens, depending upon the number of lines running towards it, so as to give easy curves and workable crossings. The railways may, of course, be arranged on one or both sides of the pit.

In estimating the number of belts required for best coal, probably a fair average will be for an ordinary belt 4 ft. 6 in. wide by 60 ft. long, to allow 50 to 60 tons an hour, which would mean that for an output of 1,000 tons in a shift of eight hours, three belts for best coal would be required. This, however, is obviously affected by the quality of the seam, and the number of hands employed in picking out the dirt.

Conveniently near or on the pit bank will be the pick and workmen's gear repairing shops, token cabins; weigh office, and an office for the keeper or bank foreman, and a cabin for the workmen.

The boilers should be placed as near the winding engines as convenient, due regard being taken, however, to have them in as central a position as possible, so that the steam may be conveyed to the different engines with as short a length of steam pipe as possible. It will also be necessary to arrange a line of railway fronting them for coaling, and provision should be made for the trucks to gravitate on to the stokehold and off again; there is also the getting rid of ashes to be considered. The size and number of the boilers will depend upon the quantity of steam required, and upon the steam pressure adopted, but one or more—say one in every six or less—should be provided as a spare one for cleaning or repairs, one or more—depending upon the total number in the range—being laid off in turn each week for cleaning, &c., and in all new undertakings care should be taken to allow room for additional boilers being put in later. In roughly estimating the number of boilers required for the various purposes of winding, pumping, ventilating, hauling, &c., probably a fair average of the quantity of feed water required per hour will be to allow 15 gallons per ton of coal drawn; or if

T = tons of coal drawn,
H = number of hours worked,
Q = quantity of feed water required in gallons per hour,

Then $$Q = \frac{T \times 15}{H}$$

An ordinary Lancashire boiler, 8 ft. diameter by 30 ft. long, will evaporate from 500 to 700 gallons of water per hour, but to be on the safe side it is advisable

to take the smaller quantity. The pressure usually adopted is 80 to 120 pounds per square inch.

The ventilating fan, with its engine, will be placed as near the upcast shaft as possible, and if not used for winding, then the pumping plant may be put into this pit as well. At very large collieries three shafts are sometimes put down, the two downcast being arranged for winding, and the third simply as an upcast and pumping shaft. If the hauling engine is to be placed on the surface, the ropes may very well be taken down the upcast pit.

The electric light and power plant may be placed in any convenient position, preferably somewhere between the pit and the boilers. If power is to be electrically transmitted, the cables are better in the downcast shaft, though if compressed air be adopted, the main air pipes may be placed in the upcast shaft, especially if this pit is not arranged for winding.

There will then be the repair shops, lamp cabin, stores, offices, locomotive shed, reservoirs, timber yard, and some means of raising material to be sent down the pit, from the ground level to that of the heapstead, which will probably consist of a hoist and gangway, stables, granary, and cart-shed all to provide for. There is thus plenty of scope for the exercise of engineering skill on the part of the designer, and in the re-modelling of existing collieries without interfering with the work of the pit, very much more so.

If the quality of coal worked be for household purposes, the local railway company will probably provide the rolling stock; but if the colliery company own its own rolling stock, as many do, then a railway wagon repair shop is desirable though not necessary, as the maintenance of the railway rolling stock may be contracted for by a firm of wagon builders. If the coal is worked for shipment, the colliery should own, or have control over, enough rolling stock to the extent of one or two days' output, and siding room should be provided for this quantity, as, if ships are unable to load for some reason or other, the pit may be worked for at least a day, by which time shipment may be resumed. Formerly coal used to be stacked, and large stacking grounds were provided, but in these days of large outputs, stacking and refilling the coal is out of the question, quite apart from the detrimental effect of the atmosphere on the quality of the coals, and the risk of fire when coals are stacked for some time in the open. When trade is bad, however, and there is only a demand for the better quality of coals, it may be necessary to stock the poorer qualities, such as small and duff, which cannot be sold, and some means should be provided whereby such coals may be cheaply and quickly handled. It is questionable, however, if it is worth while putting down expensive conveying plant for this purpose, and probably the cheapest way would be to arrange a yard with suitable sidings and hoppers for discharging the coal from the trucks, and a

small-gauge railway for the ordinary colliery tubs, for distributing in, and refilling the coals from the yard. In refilling, an inclined gangway or hoist may be arranged to allow the tubs to be emptied by means of a tippler, and a portable tippler for emptying the tubs on the heap may be provided. If the coal be a coking quality the surface arrangements will include a disintegrator, coal washery and hoppers, coal-compressing plant and coke ovens, and plant for the recovery of by-products. Where there are coke ovens the steam will be generated by the waste gases, and for this purpose probably no boiler is so suitable as the water-tube type.

Another important consideration is the disposal of the refuse, such as brasses, pickings, shale, &c., which will probably contain from 20 to 30 per cent. of combustible matter, enough to warrant the installation of a destructor, and utilising the heat for generating steam. Further, in colliery villages the refuse usually has a much higher calorific value than town's refuse, and often the scavenging is done at the expense of the colliery company, and therefore, by also destroying the village refuse, not only is a nuisance hygienically disposed of, but its destruction may be made a profitable undertaking. The scars or clinkers from the destructors may be used for road repairing, brickmaking, or mixing with mortar.

It is, of course, not much use to give diagrams of the surface arrangements of collieries, except as a guide to the lines on which they may be laid out, and probably the diagrammatic arrangement shown in fig. 165 will suffice for this purpose.

As shown in the diagram, only one pit is arranged for winding, which will be the downcast, the upcast being arranged for pumping and hauling. The railways are arranged on both sides of the winding shaft, which is objectionable, inasmuch as it necessitates the steam pipes being carried over the lines, and has no particular advantages in any respect; except, perhaps, when the output is large, and to save time in decking, a double pit bank is arranged, when the tipplers and screens for one level may be on one side of the pit, and on the opposite side for the other level, in which case the machinery on one level would be an exact duplicate of the other. The same may apply to simultaneous decking by hoists or hydraulic lifts. The engine working the screens is placed underneath the belt platform on the opposite side of the pit to the winding engine, and between the lines. The railways under the screens branch from a single line of railway connected to the by-pass, which is kept clear, on the right side of the pit, and are all connected together again above the weighbridge on the left side of the pit. To the right of the upcast pit, which is directly opposite the downcast, are the boilers with a line of railway in front, which might with advantage be connected to the empty road, though this is not shown, when the full wagons could then be pushed up the by-pass, switched on to

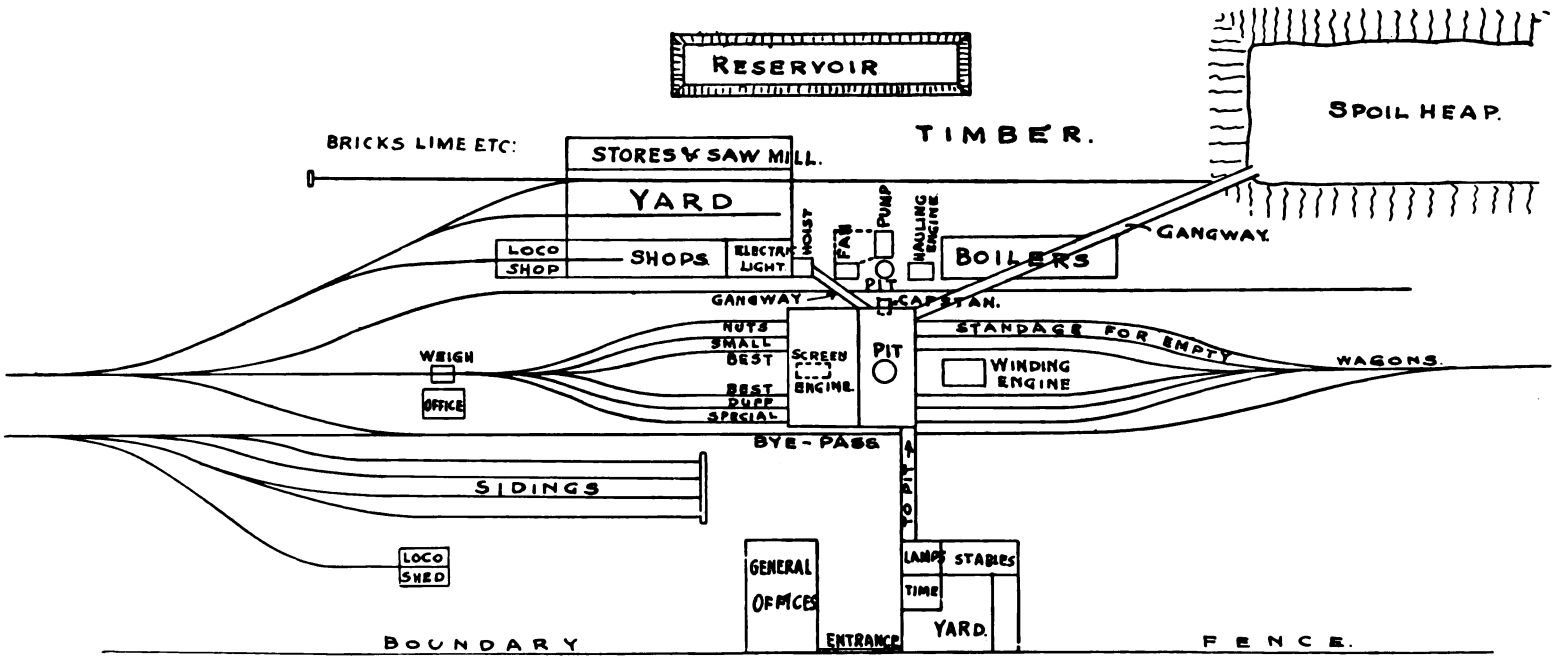

FIG. 165.—DIAGRAM OF SURFACE ARRANGEMENTS.

the stokehold line—which would have a down gradient—and dropped over the stokeholds as required, standage being provided for, say, a day's coaling. On the left are arranged the shops, stores, and sawmill, with a yard between, which would preferably be enclosed. The electric light and power house is also shown in the same block of buildings, though a better arrangement, perhaps, would be to have the fan engine, electric light and power plant all in one engine house, and if the pumping engine be on the surface, this engine as well, so that all could be looked after by one attendant, in which case the area shown by the dotted line might be enclosed. A line of railway passes the stores and sawmill to the timber yard to facilitate the discharge of goods and timber, and a line of narrow-gauge railway would run out to the timber yard from the sawmill for the purpose of conveying timber to the saws. A narrow-gauge line would also connect the shops, stores, sawmill and timber yard with the hoist, by which means all timber, materials, bricks, mortar, &c., to be sent down the pit, and all broken tubs, gear, &c., to be repaired at the shops, are conveyed to or from the surface level to that of the pit bank, the pit bank and hoist being connected by a gangway for this purpose. Another gangway is shown running out to the spoil or stone heap. A brickworks —which in this case is not provided for—would probably require another gangway, or a branch from an existing one, for the discharge of fireclay. On the boundary line are the entrance gates, with the general offices on one side, and the workmen's time office and lamp room on the other, as are also the stables and stable yard. Each workman should be required to pass through the time office, the surface workmen each receiving a time-board, and passing on to their various occupations; the underground workmen would receive a token and pass through the lamp room —if safety lamps are in use—and after receiving their lamps would pass straight to the pit by a gangway or stairway connecting the pit bank and lamp room or time office, as the case may be. At the end of the shift each time-board and token would be returned, and by this means a record is kept of each workman, and the underground workman has not to cross any railway lines in going to his work, thus, to some extent, minimising the risk of accidents.

As few collieries have an independent source of water supply, it is necessary to provide reservoirs, which are usually kept full by the pit pump. Where the water is hard, as often is the case, it may be found advisable to instal one of the many forms of softening plant. Where locomotives are in use, good water is much more necessary than for ordinary Lancashire boilers, and a good plan is to form a separate reservoir, and collect therein all the rain water from the heapstead and buildings, which collectively will form a considerable amount; and the longer life to locomotive boilers and fireboxes will probably soon repay the small initial outlay. Another point for consideration is the advisability of installing a central

condensing plant, which would economise steam, and at the same time ensure a certain amount of pure soft water. Means must be provided for extracting the oil, however. There are further the questions of feed-water heating, or "economisers," and superheating to be considered.

In the case under consideration two belts for best coal are arranged for, and one line each for small or slack, nuts, and duff respectively, and another line is shown for special, but of course any classification of coals will depend upon the trade, and the belts and railway lines must be arranged accordingly. Where the coal is for coking only, probably no cleaning belts will be required, but a washing plant and disintegrator, coal-compressing plant, and possibly storage hoppers will be necessary. Again, where a high-class house coal trade is carried on, it may be necessary to arrange the belts for allowing the trucks to be filled by hand. Thus, the plant for screening and cleaning the coal and its arrangement will depend upon the class of trade; and the advantages of separate proposed arrangements need to be very carefully considered. The question of cost very largely influences the decision, but it is unwise to decide upon a cheaper plant if by increasing the first cost the daily charges will be reduced. On the other hand there is no need to go to extremes, and if, for instance, a line of railway can be adapted for two classes of coal, though it would necessitate a little more labour, a considerable amount of capital might be saved, and the extra daily charges would in all probability amount to less than the sum which would be allowed for depreciation and interest on capital. Many similar points will arise, all of which should be carefully studied by the designer.

Generally, in laying out colliery surface arrangements, the aim should be to have each operation as automatic as possible, the plant and buildings thoroughly substantial, compactly arranged, and situated in close conjunction with each other, so that work may proceed quickly and smoothly without risk of breakdowns or stops, and with the least amount of capital expenditure and daily working expenses.

CHAPTER IV.

SHAFTS AND HEADGEARS.

It will be necessary to consider and decide upon, before commencing sinking operations: (1) the output required per day; (2) load to be raised per wind; (3) dimensions of tub or hutch to be employed; (4) size of cage and number of decks; and (5) the type of cage guides to be adopted, as these questions materially affect the dimension of the shaft, and the load to be raised determines the size of pulley frames, and to some extent their height.

To illustrate this, probably the best way will be to take an example. Suppose it is required to raise 1,500 tons from a depth of 250 fathoms (or 500 yards) in a shift of eight hours. The weight of coal to be raised per minute will be

$$\frac{1{,}500}{8 \times 60} = 3{\cdot}125 \text{ tons per minute.}$$

Taking an average speed of winding at 40 ft. per second gives

$$\frac{500 \times 3}{40} = 37{\cdot}5 \text{ seconds,}$$

which will leave 22·5 seconds for changing.

The size and carrying capacity of the tub are now to be considered, which are obviously influenced by underground conditions, height of seam, &c., and vary accordingly, but knowing the weight to be raised, it may be arranged for:—

2	tubs	each	carrying	32 cwt.
4	,,	,,	,,	16 ,,
6	,,	,,	,,	10½ ,,
8	,,	,,	,,	8 ,,
or 10	,,	,,	,,	6½ ,,

The first being about the largest and the last about the smallest size of tub used. As to the dimensions of the tub, whether it should be high or low, narrow and long, or short and wide, will chiefly depend upon underground conditions, the others being governed by the special design adopted. Allowing 45 cubic feet per ton of coal as a fair average, and the height of the body being determined, it is easy to fix the other dimensions. Suppose in this case 10½ cwt. tubs are decided

upon, and that the body must not exceed 3 ft. from the height of rail, and the wheels and tram to be under the body. Allowing 1 ft. for wheels, &c., leaves 2 ft. as the first dimension, and as the required cubical contents will be

$$\frac{45 \times 10{\cdot}5}{20} = 23{\cdot}625 \text{ cubic feet}$$

and

$$\frac{23{\cdot}625}{2} = 11{\cdot}8125$$

or nearly 12 ft., which is the area in square feet required, and from which the length and breadth are easily ascertained. In this case 4 ft. by 3 ft. would probably suit, and the capacity of the tub would be

$$4 \times 3 \times 2 = 24 \text{ cubic feet,}$$

which in practice would be about right, and allowing, say, 3 to 6 inches at each end for buffers gives 4 ft. 6 in. to 5 ft. as the over-all length of tub, whilst the extreme width would be from 3 ft. 1 in. to 3 ft. 4 in., according to the material used in its construction. It will be necessary for the output stated to raise six of these tubs per wind, and the cage may be designed to carry

(*a*) 6 tubs on one deck,
(*b*) 3 ,, each on two decks,
or (*c*) 2 ,, ,, three decks,

and, roughly, the dimensions of the cage deck would be with

		Ft.	in.		Ft.	in.
(*a*)	3 tubs end on 2 abreast.....	16	0	×	8	0
	2 ,, ,, 3 ,, ...	11	0	×	11	6
(*b*)	3 ,, ,, single line	16	0	×	4	6
	3 ,, abreast	11	6	×	6	0
(*c*)	2 ,, end on	11	0	×	4	6

and the diameter of circular shaft necessary for each size of cage is shown in diagrams figs. 166-170, and for square or rectangular shafts in figs. 172-176.

In the case of circular shafts 1 ft. has been allowed between the cages, and in the case of rectangular shafts, 1 ft. has been allowed as clearance for lining and guides and 1 ft. between the cages, but the dimensions for circular shafts are the finished sizes. It will at once be seen from the diagrams that figs. 167 and 169 are unsuitable, especially fig. 169, and that to secure the least diameter of shaft with the greatest utilisation of the area, the two cages should form as near as possible a perfect square, and that with rectangular shafts the area decreases, as the form becomes less square and more rectangular. To compare the respective areas, leaving out the question of ventilation, and assuming that the only consideration is the size of shaft to fit the cages, the following table is arranged :—

Circular shafts.		Rectangular shafts for cages only.			Rectangular shafts with four divisions.		
Diagram.	Area.	Length.	Breadth.	Area.	Length.	Breadth.	Area.
	Ft.	Ft.	Ft.	Ft.	Ft.	Ft.	Ft.
a 24	452·39	19	18	342	26	18	468
a 27	572·56	26	13	338	33	13	429
b 19½	298·65	12	18	216	19	18	342
b 25½	510·71	26	8	208	39	8	312
c 15½	188·69	12	13	156	19	13	247

from which it is seen that for a single-deck cage in a circular shaft, 24 ft. is the most suitable, and for a double-deck cage 19½ ft. and 15½ ft. for a three-deck cage, as these require the least area of shaft. (It has been considered unnecessary to consider the case of two tubs abreast in a three-deck cage, as it is very improbable that such an arrangement would occur in practice.) For rectangular shafts, for a single-deck cage, 26 ft. × 13 ft. has the least area, but the difference between this, and the shaft 19 ft. × 18 ft. is so little, and as three tubs end on are to be preferred to two tubs end on for convenience of changing, the shaft 19 ft. × 18 ft. is the most suitable; and the same considerations apply to the two-deck cage. The advantages, however, of the long and narrow shaft in point of area is seen when considering shafts with four divisions, and in the case of the single-deck cage 33 by 13 feet has the advantage over 26 by 18 feet, and for a two-deck cage 39 by 8 feet over 19 by 18 feet. (The dimensions given in the diagrams for the pumping and hauling partitions are, of course, quite arbitrary.)

The question of changing must now be considered, as it has an important bearing upon which of the various shafts proposed shall be selected. The time allowed for changing the tubs in the case given is twenty-two and a-half seconds, and ordinarily it will take at least ten seconds per deck to change, so that unless some arrangement for simultaneous decking be adopted, a two-deck cage must be selected, which would allow twelve and a-quarter seconds for changing each deck, which in ordinary every-day working would be about right. The arrangement of three tubs end on would again be the most suitable, as a less number of men engaged in banking-out would be necessary than with probably any other of the proposed arrangements. The single-deck cage would occupy much less time in changing, but more men would be required, and a larger amount of capital would be expended in sinking. With the three-deck cage a less diameter of shaft would be required, with less expenditure of capital in sinking, but some arrangement of simultaneous decking and consequent larger number of men employed in banking out, and a larger expenditure of capital in erecting plant, would be necessary; but,

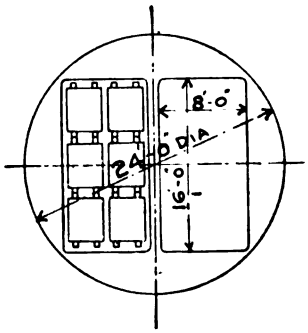

FIG. 166.

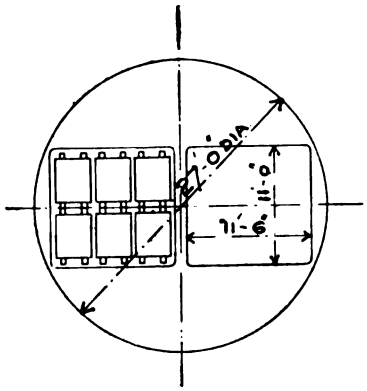

FIG. 167.

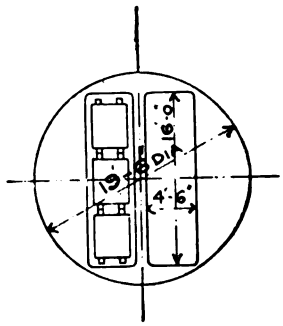

FIG. 168.

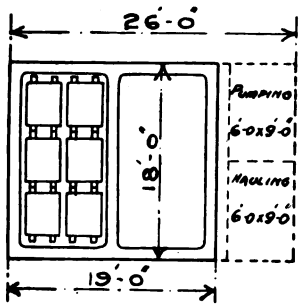

FIG. 172.

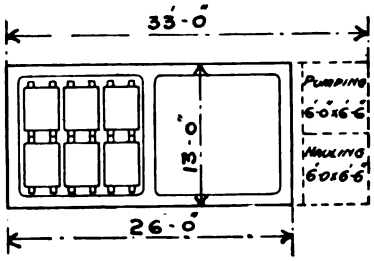

FIG. 173.

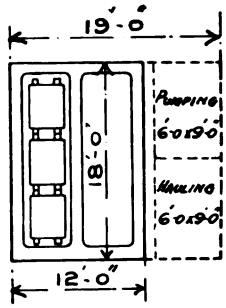

FIG. 174.

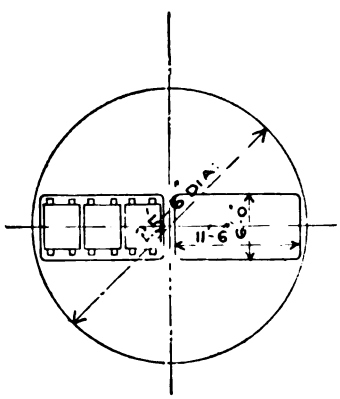

FIG. 169.

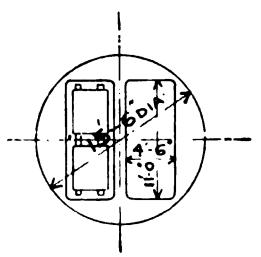

FIG. 170.

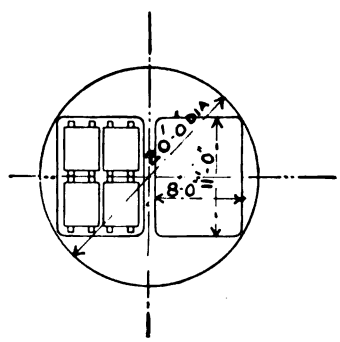

FIG. 171.

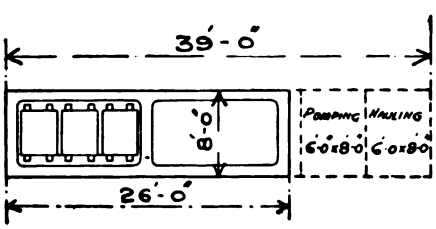

FIG. 175.

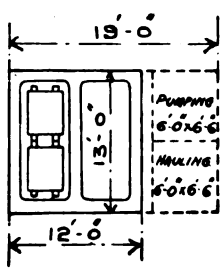

FIG. 176.

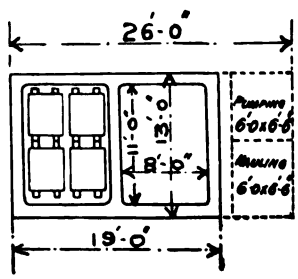

FIG. 177.

on the other hand, the difference between the cost of sinking the larger shaft and that of the smaller would probably more than compensate for the extra cost in the erection of plant, and the interest on capital saved could probably be set off against the daily charges due to the employment of more men for decking.

There is, however, another solution to the difficulty, and if it is required to adopt the smaller-sized shaft, without any means of simultaneous decking, this may be done by increasing the load, and allowing more time for changing. In this case a four-deck cage, each carrying two tubs or eight tubs per wind, would give

$$8 \times 10\tfrac{1}{2} = 84 \text{ cwt.}$$

and allowing ten and a-half seconds per deck for changing, the time of winding remaining the same,

$$4 \times 10\tfrac{1}{2} + 37\tfrac{1}{2} = 79\tfrac{1}{2},$$

or, say, eighty seconds per 84 cwt.; then by proportion

$$\frac{8 \times 60 \times 60 \times 84}{20 \times 80} = 1{,}512 \text{ tons}$$

per eight hours, which corresponds practically to the stated required output. A more powerful winding engine to deal with the heavier load, and somewhat higher headgear, due to increased height of cage, would be required, but the extra cost of these would be small in comparison to the saving effected by doing away with simultaneous decking.

Generally, then, it would appear that the best of the proposed arrangements would be to adopt either the two-deck cage with 19 ft. 6 in. diameter shaft, or the four-deck cage with 15 ft. 6 in. diameter shaft, and the latter would probably have the advantage of requiring less outlay of capital. Objection may be taken to the latter arrangement owing to the time occupied in changing, which is looked upon as lost time, which might be more effectively utilised in winding; but it will require little reflection to see that it is not a question of wasting time, but rather one of getting the required output with the least capital outlay and daily working expenses, or, in other words, it may be cheaper to occupy time in changing than to adopt means to save changing, and it is obvious there must be an enormous difference in the cost of sinking a 19½ ft. diameter shaft and one of 15½ ft. diameter, with a difference of 110 square feet in area. Again, it may be said, the size of the pit being small, there is no margin for increasing the output later on if necessary; but with any arrangement of shaft and cages designed for a given output before the latter can be increased, either the plant is too big for the required output to commence with, or new machinery must be put down. For instance, the two-deck cage, in the supposed case, with only one change, could not wind more than 1,500 tons in the eight hours without simultaneous decking, and the winding engine could not deal with a greater load than six tubs, consequently the number

of decks could not be increased without a more powerful winding engine; on the other hand, with the four-deck cage the engine power would already be established, and it would only be necessary to add some means of simultaneous decking, when the output could easily be increased.

Instead of the four-deck cage and simultaneous decking by means of cages or hoists, the cages are now often arranged with two decks, to carry four tubs (two abreast) on each deck, and a double heapstead or pit bank is arranged, but it is difficult to see wherein lie the advantages of this system, unless a very large output is required from a deep shaft, and the saving of time in decking is essential. Fig. 171 shows the diameter of shaft which would be required for the example taken, from which it is seen that the cages do not fit the shaft so well as in fig. 170, and that a shaft with an area of 314·16 square feet, or 125 square feet greater, is required for exactly the same load. The double pit bank certainly has the advantage over other means of simultaneous decking, inasmuch as it is more certain, as there is no risk of the arrangement getting out of order as might occur with cages or hydraulic hoists. On the other hand, the same number of banksmen would probably be required, and the cost of the double pit-bank would probably be as much or more than the cost of cages or hoists, so that it would appear, other things being equal, the four-tub deck cage has the disadvantage of requiring a much greater expenditure of capital in sinking without any corresponding or compensating advantages, with the exception of saving the extra wear and tear on the ropes due to changing.

Fig. 177 shows the four-tub deck cage in a rectangular shaft, from which it will be seen that the space required for the cages alone is equal to the area required for the four divisions for two-tub deck as shown in fig. 176.

The question, then, of deciding the dimensions of a shaft for any required output, is one requiring very careful consideration, and resolves itself into one of working costs, and interest on initial expenditure of capital—whether the capital expended will save sufficient, by reducing working expenses, to yield more than the capital would yield by interest alone; or whether, by reducing the capital expenditure, the interest this would yield would amount to as much or more than the extra cost of working.

As previously stated, the question of guides—and some means of guiding the cages is absolutely essential—also affects the diameter of the shaft, as in round shafts the guides may be rigid, as wood, or iron or steel rails, or flexible, as wire rope; with square or rectangular shafts the practice is to adopt some form of rigid guide. Wire rope guides are used to a very great extent in England, though it would appear they are not popular in any other country. The advantages claimed for wire rope guides are—

1. Lessened first cost.
2. Easier fitted up and secured.
3. The shaft is clear of buntons or other fixtures, and
4. Are free to expand or contract.

Against these, however, there is the danger of collision of the cages, and to avoid this risk it becomes necessary to place the cages as far apart as possible, and it is easily seen that the deeper the pit the greater the flexibility of the guides, as in proportion to their length they cannot be weighted so heavily, in order to secure the same amount of rigidity as with shorter guides; and, moreover, the greatest degree of flexibilty is in the middle of their length, at the worst possible point, viz., at the meeting or passing of the cages. That cages do collide there is abundant evidence to prove, even when the precaution of adding intermediate guides and fending bars to cages is taken, and the concussion of air alone is sometimes enough to bring cages violently into collision. On the other hand, there are many instances in which cages have run in rope guides, fairly close together, for years without any accident whatever, though in others accidents have been so frequent that it has been found necessary to reduce the speed of the cages when approaching meetings, with serious reduction of output. With rigid guides there is no such danger to be apprehended, and consequently the cages can be placed much closer together, and a smaller diameter of shaft is required for the same size of cages, so that against the advantages previously enumerated there are the following disadvantages :—

1. Danger of collision.
2. Larger diameter of shaft with consequent greater cost of sinking for the same output.

And generally it would appear that it is a question of whether the saving effected by sinking a small diameter pit, and adopting rigid guides, will be more than the cost of sinking a larger diameter pit and adopting wire rope guides, or *vice versâ*; and the question of ventilation will to some extent influence the decision.

If, however, pipes are to be fixed in the shaft, buntons are necessary for their support—though electric cables may be suspended in the pit, and boxes or rhones for hauling ropes may be secured to the shaft sides without the aid of these, but generally it would appear that if buntons are necessary for other purposes, some form of rigid guide must be adopted, from considerations of safety alone. To summarise, then, if the shaft is large and clear, and the cages can be kept well apart, with at least a distance of 18 in. between them, and 12 in. between the corners of the cage and the shaft side, use rope guides, but if the shaft need not be large for the purpose of ventilation, then keep the diameter as small as possible and use rigid guides.

The effectiveness of any form of guide is directly proportional to the distance from the winding rope or point of suspension, to the guide, and consequently in designing any arrangement of guides they should be kept as far from the winding rope as possible. A very common arrangement with rope guides is to have three—two outside and one inside—to each cage, and two intermediate guides suspended between them to prevent the cages colliding, as shown in fig. 178. The inside guide, however, being in line with winding rope, at right angles to the length of the cage, and only separated therefrom by a distance equal to half the width of the cage, can be of very little use in preventing oscillation, and the longer and narrower the cage the greater this uselessness becomes, but reaches its maximum of effectiveness when the distances of the guides from the winding rope become equal,

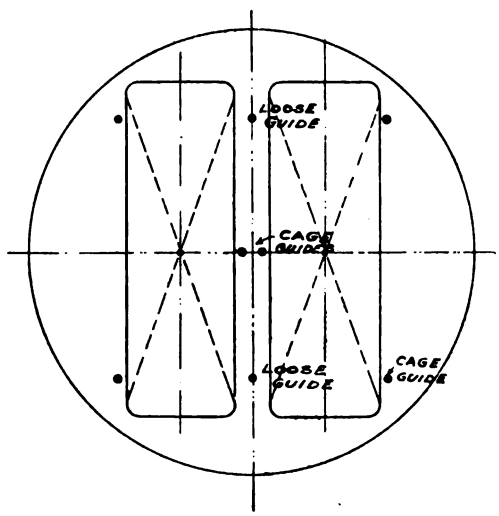

FIG. 178.—ARRANGEMENT OF ROPE GUIDES IN SHAFT.

or the position of the guides relative to each other forms an equilateral triangle. Certainly the inside guide will, to some extent, assist in preventing the cage from swaying, but the chief difficulty—especially with a new "Lang's lay" winding rope—is to prevent oscillation in the first instance, and if this can be prevented there will be less likelihood of the cage swaying. The proper thing to do, then, would appear to be either to do away with the third guide altogether, and put in two stronger outside guides, or to adopt four lighter guides, except in the case of where the three points of guiding would nearly be equal in distance from the point of suspension. Even in the latter case probably four guide ropes of lighter section would cost about the same, and would certainly be better, though, on the other

hand, it may be necessary to adopt the three stronger ropes on account of the greater breaking strain which these would have, and the decision therefore is influenced by the depth of the pit.

Another arrangement sometimes adopted is to have only two guides to each cage on the outside, and two loose intermediate guides between the cages, and fitting the latter with longitudinal fending pieces of hard wood or wood faced with brass strips which can be easily renewed, in order to prevent the cages coming into collision. The real usefulness of the intermediate guides is to be questioned, and it is much better to make certain that the cages cannot possibly approach each other at meetings, than to provide means in the shaft to prevent them colliding; and this could no doubt be done by fitting four guides to each cage, which would lessen the tendency towards oscillation sufficiently to prevent all risk of collision. Eight rope guides will cost more than six, it is true, but in all shaft work first cost should never be set against absolute immunity from accident, and loose intermediate guides do not give this.

Guide ropes are suspended from the headgear, and kept taut by weights in the sump, or sometimes by means of screws, but this latter method is objectionable on account of expansion and contraction of the ropes. Where there is not sufficient depth in the sump for the weights, however, provision for expansion and contraction may be made by springs at the top or bottom, which act on the tension screws, such an arrangement being shown in figs. 179 and 180 for fixing to the headgear, and which has the advantage of being easily adjustable, though this is seldom necessary. Undoubtedly, the best way is to hang on weights at the bottom, as this method takes off all strain on the pit bottom framing; and, moreover, whatever may be the amount of contraction and expansion the tension remains the same.

Rope guides are commonly secured to the headgear by clamps, a number being separately fixed one above the other, or by one long specially-prepared clamp, the former being shown in figs. 181 and 182, and the latter in figs. 183 and 184. The clamps may be made with a V groove as shown in fig. 181, or bored to a dimension such that the clamps will closely fit the rope and leave a space of about ¼ in. between them. The bolts should have square necks fitted into square holes in the clamps. The clamp shown in figs. 183 and 184 is provided with a base, which rests on and is secured to the channel irons. A good proportion for the length of clamps is from three to four times the circumference of the rope. Another way of securing rope guides is shown in fig 179, where a solid socket or cap is attached to the end of the rope. The end of the rope is opened out, and a solid iron tapered plug is driven in, and the iron bolt tightly screwed into the top of the socket, which keeps the plug in place, and effectually prevents water getting

into the interior of the rope. Another way is to open out the wires, place in a mould, and run in white metal through a hollow mandril, the cone being large enough to surround the wires. The mould being in halves is then taken off and the cone drawn into the socket. The weights are also very often supported upon clamps fixed to the end of the rope as shown in fig. 185, but a better method is to socket the end of the rope, and shackle this to a rod which carries the weights as shown in figs. 186 and 187. A different form of socket is shown in fig 186 to that in fig. 179. In the former a fluted plug is used, and the ends of the wires are turned over outside the plug, and the socket is of the usual open type, and kept closed by hoops. The flutes in the plug are half the diameter of the wires in depth and evenly divided. The flute for the centre wire, however, deepens as it nears the point, as shown in the detail sketch. A depth of about two yards should be allowed in the sump below the bottom of the weights. Much less, of course, may be allowed, but in such a case the sump should be oftener cleaned out, and more attention should be given to ensure that the weights are hanging clear.

Rope guides are usually made from drawn rods of charcoal iron or mild steel, and consist usually of six wires laid over one as shown in section in fig. 188; but in order to minimise the risk of accident due to a wire breaking and getting loose, lock coil ropes have been introduced, and a few sections are shown in figs. 189 to 194, as made by Messrs. Latch and Batchelor, which, in addition to preventing a broken wire getting loose, present a smooth and even rubbing surface for the guide shoes.

The weight and strength of guide ropes may be found from the following formulæ:—

C = circumference of the rope,

$C^2 \times 1{\cdot}35$ = weight in pounds per fathoms,

and their strength,

$C^2 \times 1{\cdot}4$ = breaking weight in tons.

As rope guides have practically little or nothing to do, they may be loaded up to one-third of their breaking strain, the load, of course, including the weight of the rope itself. So much weight as this, however, will be unnecessary in most cases, though the deeper the pit the nearer it will approach this quantity. Probably one-fifth will be a fair average.

The guide shoes fixed to the cages may be of cast iron, cast steel or hard bronze, the first and last being the best. The part of the shoe embracing the rope is usually a cylinder in halves, which is fixed between clamps or straps bolted to the cage hoop. They should be made as long as possible—from nine to twelve times the diameter of the rope—and two at least to each guide. Figs. 195 to 197 show three views of one of the best arrangements of guide shoes. One-half of a

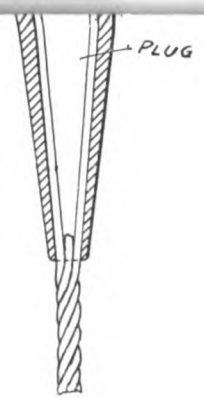

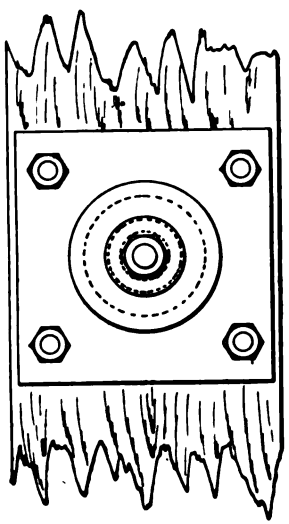

FIG. 180.

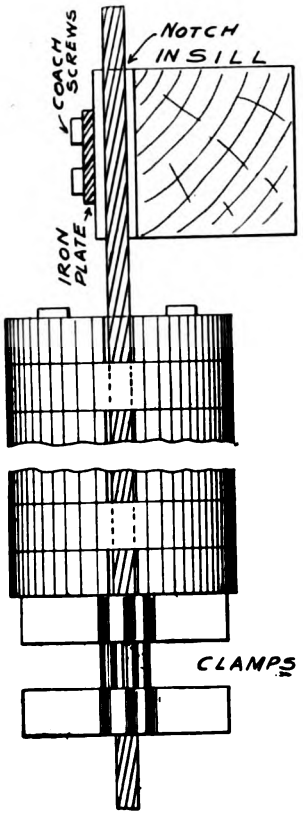

FIG. 185.

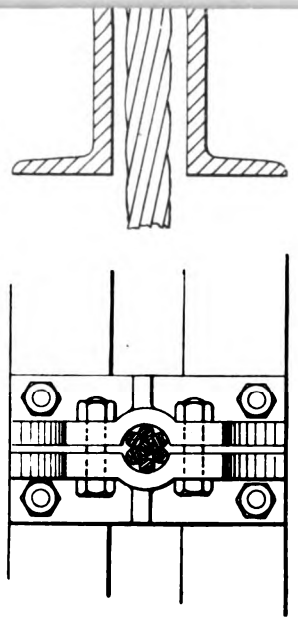

FIG. 184.

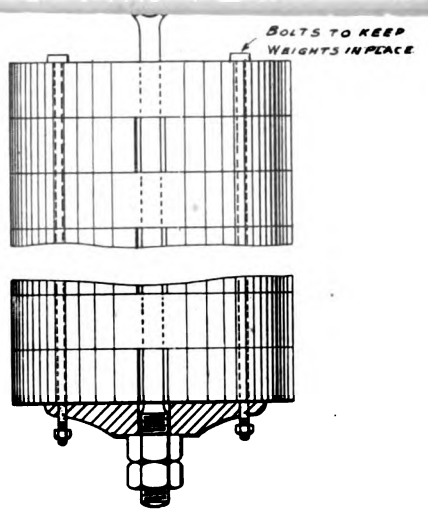

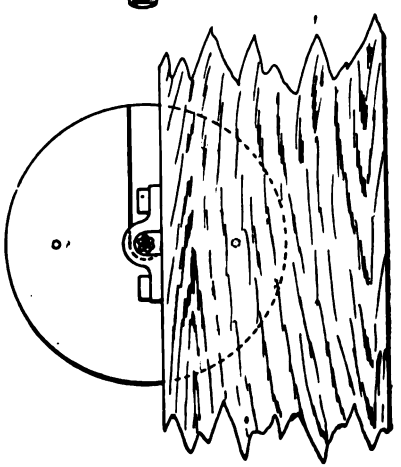

FIG. 187.

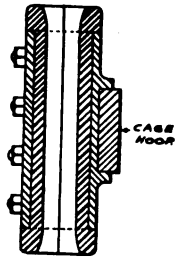

FIG. 195.

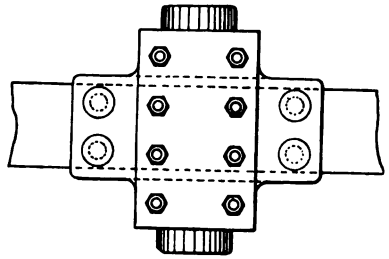

FIG. 196.

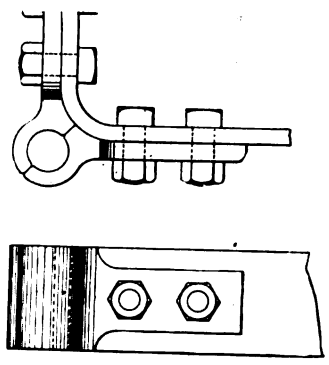

FIG. 202.

FIG. 203.

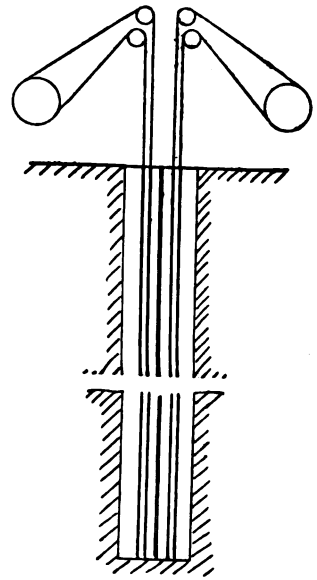

FIG. 204.

PLATE VIII.

cast iron clamp is permanently fixed to the cage, provided with bolts with let-in heads for securing the outer half. This clamp is bored out to fit the gunmetal cylinder, also in halves, and which is machined to suit the clamp, being provided with collars to prevent any up or down movement. These cylinders may be kept in stock, and are easily replaced from time to time as they wear out. Another arrangement is shown in figs. 198 to 200, but is not so good. In this case the shoe is of cast steel, one-half being permanently fixed to the cage, and the other half

FIG. 188.

FIG. 189.

FIG. 190.

FIG. 191.

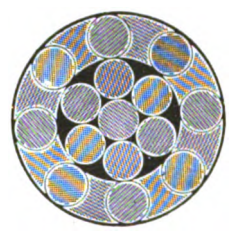

FIG. 192.

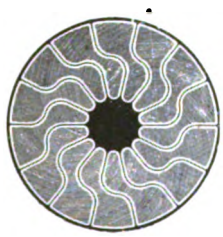

FIG. 193.

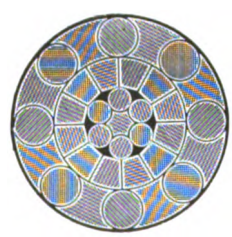

FIG. 194.

being held in place by two wrought iron straps. Though strong and serviceable, cast steel shoes are harder on the guide ropes. Another arrangement is shown in figs. 201 and 202, which is applicable in cases where the guides are at the corners of the cage, which is the most advantageous position. The shoe is in halves, each half being fitted and bolted or riveted to the cage hoop, the guiding part being equal to the depth of the hoop. In both the latter cases, however, complete new shoes have to be fitted to the cage as they wear out, whereas in the first case the

liners are easily machined and fitted, and being of brass do not wear the ropes so much, whilst the permanent shoes will outlast several cages.

Rigid guides may be of wood or of iron or steel rails, the latter being usually used, and may be arranged in various ways Rope guides can only be applied to the sides or corners of the cage, whereas rigid guides may be arranged for either the sides or ends. A very common arrangement with wood guides is to apply them to the ends of the cage in circular shafts, and to the sides in rectangular shafts. End guides have some advantages, inasmuch as they take up little room in the shaft, they are applied at the end of the cage in line with the winding rope, and in the most effective position for preventing oscillation, and tending to smooth running with a minimum of frictional resistance; but have the disadvantage of requiring side guides at bank and the pit bottom. With this exception, however, probably no other arrangement is so good, and it is the only arrangement which permits of fitting four cages into a shaft, as at Seaham Colliery, and shown diagrammatically in figs. 203 and 204. Here the inside guides are perfectly straight, but at "meetings" the shaft is widened out, and the outside guides are splayed—at as gentle an angle as possible—for some distance above and below meetings, so as to draw the outside cage to one side, to pass the inner one. Wood end guides are cheap and effective, but do not last long, and require constant attention, and if anything gets loose in the cage, or a coupling chain, for instance, gets fast between the cage and guide, it usually results in an accident. The chief trouble, however, is their rapid wear, especially at the joints, and this no doubt is due to the limited length of the guide shoes, as these can in most cases be little more than the depth of cage hoop, and very often too much play is allowed in the shoes, and as a result the life of wood end guides is probably not more than from two to five years. So far steel rails have not been used for end guides, owing to the difficulty of changing from the side to the end guide, but steel angle or channel bars may be used as shown in fig. 205, which practically reverses the arrangement of wood guide and channel shoe; the block might with advantage be replaced with a roller. Where the cages are arranged for two tubs abreast, however, the difficulty with steel rails as end guides disappears, as the cage will remain in the guides and the tubs be run past on either side.

In rectangular pits there is no difficulty in fixing rigid guides, as these are usually lined with wood frames, and the guides are simply fixed to these by sunk bolt-heads and nuts; the joints of the guides usually butt against each other, but other joints, such as V or ⌋⌈⌊ or half-lapped, are sometimes adopted, and vary in dimensions from 4 in. × 3 in. to 5 in. × 4 in. With circular pits it is necessary to fix buntons, and these may be either secured by letting them into holes cut in the rock, building them into the brick lining, or securing them to cast iron shoes built

into the lining, which is the best method, and in the case of cast iron tubbed shafts bolting them to cast iron brackets, which are bolted to or cast on the tubbing; or by securing them to wood runners or stringing deals, which are fixed to the shaft sides by spikes driven into wood plugs let into the wall or rock, and run longitudinally from top to bottom of the shaft. Buntons are usually of wood, though they may be of ⊐ or ⊥ section steel, in which case they are usually fixed without runners. Wood, however, being considerably cheaper, will probably continue to be preferred, and if good pitch-pine be used, a life of about thirty to forty years may be allowed for.

Steel rails are usually fitted to one side of the cage, and figs. 206 and 207 illustrate one method of fixing the buntons and guides. The buntons are secured

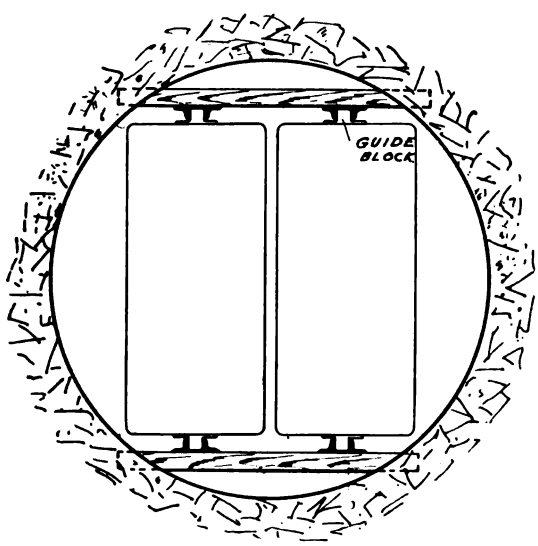

FIG. 205.

to longitudinal runners spiked to elm wood plugs driven into the wall. These runners vary in dimensions, being in this case of red wood 11 in. × 3 in. The buntons are of selected pitch-pine, 10 in. × 5 in., tenoned at each end, the tenons being let into the runner, and kept in place by a plate 3 in. × ½ in., secured to the face of the runner by two coach screws. The buntons are placed 6 ft. apart, centre to centre. The rails are fixed to the buntons by cast iron sleepers and gib bolts, the sleepers being first independently secured to the buntons by bolts, and the rail flange dropped end on into the chair or grooves cast on the sleeper. At the joints, the ends of the rails—which simply butt against each other—are secured by four gib bolts, the joint sleeper being deeper than the intermediate ones where only two

FIG. 206.

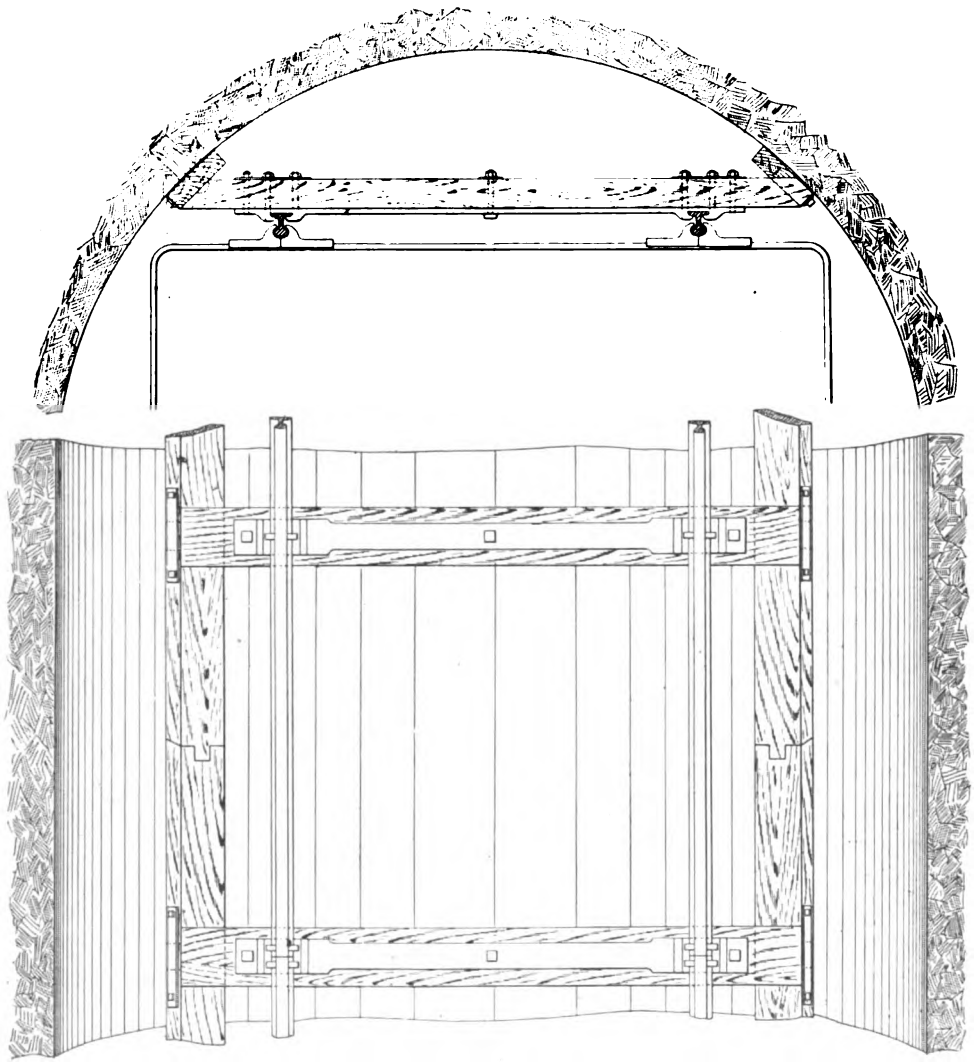

FIG. 207.

METHOD OF FIXING THE BUNTONS AND GUIDES.

gib bolts are used. The joints are close, nothing being allowed for expansion, which cause no trouble, as the rails are free to expand at the top, and in most cases this will be found all that is necessary, providing the joint shoes are broad enough to allow the expansion. Figs. 208 and 209 illustrate another method of fixing wood

FIG. 208.

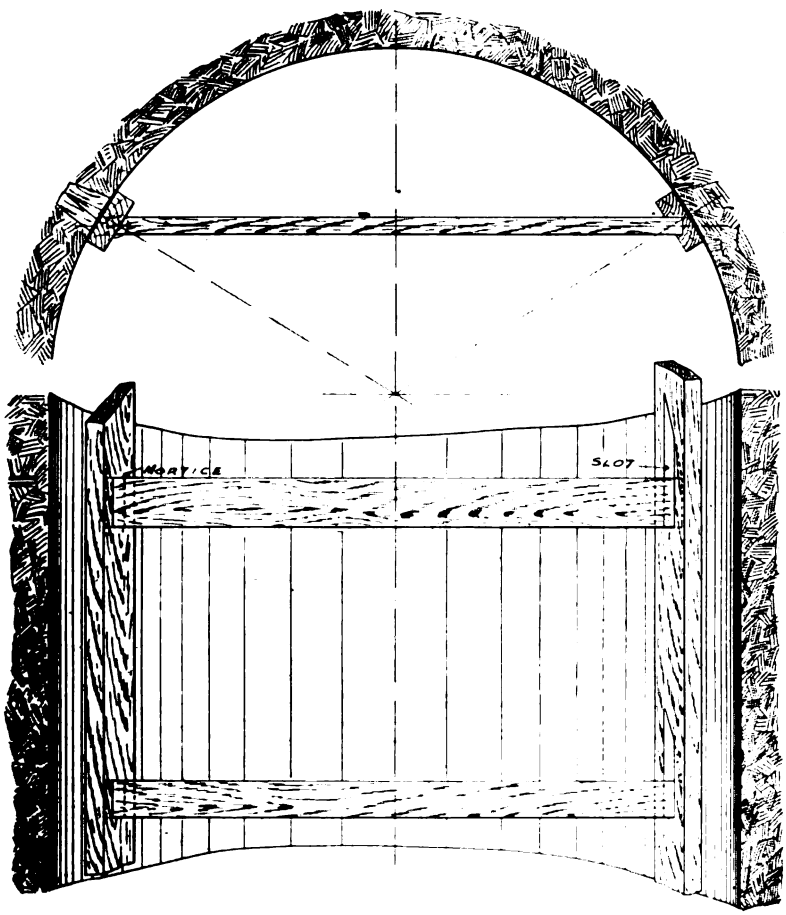

FIG. 209.
METHOD OF FIXING WOOD BUNTONS.

buntons. The runners are spiked as before, but the buntons, instead of being let into them on the front, are mortised into one runner and driven into a slotted mortise in the other, so that the bunton assists in securing the runner, and makes a good firm job, but owing to the angular thrust on the runner it is more suitable for a long chord than a short one.

Another arrangement of fixing steel guide rails is shown in figs. 210, 211 and 212. In this case the rails are fixed to one set of buntons, which are of steel joists, either built into the walling or secured to cast iron blocks built in. The rails are placed on both sides of the girder, the flange of the rail being let into a recess cut

FIG. 210.

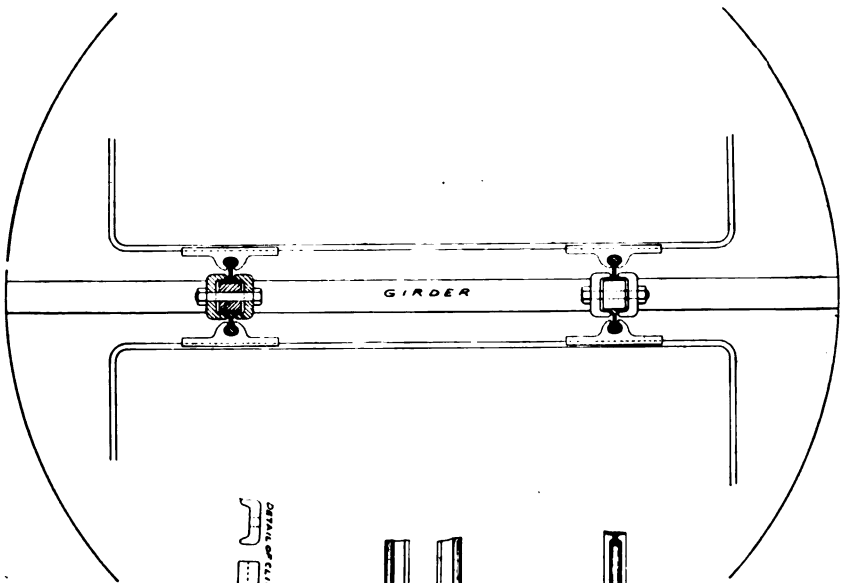

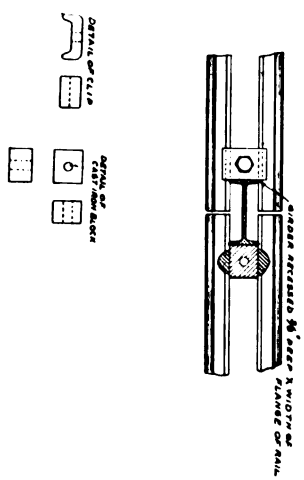

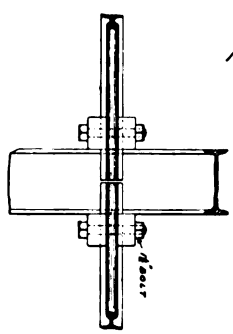

FIG. 212.

FIG. 211.

METHOD OF FIXING STEEL GUIDE RAILS.

into the flanges of the girder, and clamped with broad steel clips by a single bolt drawing them together. A cast iron distance-piece is placed between the rails, which rests on the girder and prevents the clamps springing or bending the rails, which otherwise would be possible. A space of $\frac{1}{4}$ in. to $\frac{3}{8}$ in. is left between the

rails for expansion, though in most cases $\frac{1}{8}$ in. would be enough. The linear co-efficient of expansion of steel may be taken as ·000006 per degree Fahr. rise in temperature, and as the temperature in a downcast shaft will probably only vary about 30 degs. Fahr. between winter and summer, the distance moved over by the rails due to expansion and contraction will be

$$\cdot 000006\ (t - t_1) f$$

where

$(t - t_1)$ = Difference in temperature in degrees Fahr.; and

f = Length of rails.

Thus for a rail 30 ft. long, the increase in length would be

$$\cdot 000006 \times 30 \times 30 \times 12 = \cdot 064$$

or about $\frac{1}{16}$ of an inch, so that $\frac{1}{8}$ in. is ample. In an upcast shaft there will be very little, if any, variation in temperature.

The girders vary in dimensions according to their length and the distance they are spaced apart, and in order to save space they should be as narrow as possible, consistent with the strength required. This method of fixing rail guides is probably the best, and will compare favourably with other systems in point of cost, as only one set of buntons is required, and has the advantage of being lasting and effective.

Steel rails from 40 to 70 pounds per yard are most commonly used, and from 18 to 30 feet in length, though in order to avoid joints they should be at least 30 ft., and there is no difficulty in procuring rails this length. In choosing a section, one with a broad flange should be preferred, other things being equal.

Guide shoes for steel rails are usually of cast steel, in halves, and bolted or riveted to the cage hoop. Figs. 213, 214 and 215 show three views of a good example of this class of shoe. As will be seen, the back is recessed, this recess being machined to accurately fit the cage hoop. One half has a tongue or feather which fits into a corresponding groove in the other half, both tongue and groove being machined. The sliding part is also sometimes machined to fit the rail, a play of from $\frac{1}{8}$ in. to $\frac{3}{8}$ in. being allowed. As with shoes for rope guides, they should be as long as possible, a good proportion being from four to five times the width of the head of rail, and a rail shoe should be fitted to each cage hoop for each guide.

Where wood guides are arranged on each side of the cage, short shoes attached to the cage hoops may with advantage be replaced by long bars of either wood or mild steel angle or channel bars, extending the full length of the cage, and splayed a little at the top and bottom.

Lengthening the guide shoes does not, as may be supposed, increase the friction, but by exposing a greater surface for wear, the shoes last longer, and generally conduce to smooth and efficient running.

All guides should be kept well lubricated.

Headgears or pulley frames may be of wood, iron or steel, or columns of masonry; or a combination of both. Wood is not now so much used for this purpose, steel taking its place, though for small pits wood will probably continue to be used, and even for fairly large collieries, wood being much cheaper, the consideration of its adoption is important. An objection to wood is the danger from fire, but as pulley frames do not usually burn down themselves if the remainder of the heapstead be a steel structure, any danger from fire to the pulley frames alone is so remote that it need not be apprehended. It is difficult sometimes, however, to procure long lengths of pitch pine timber from 60 ft. to 80 ft. of large enough dimensions, absolutely straight, and free from sap, knots or other defects, whilst steel frames have no limit to their dimensions. It is really a question of

FIG. 213.

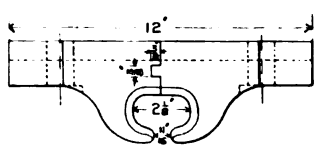

FIG. 214.

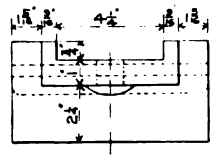

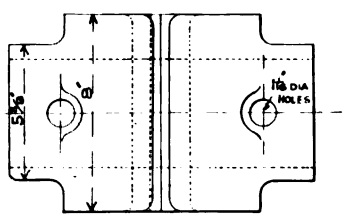

FIG: 215.
GUIDE SHOES FOR STEEL RAILS.

cost against durability, and the difference in the price between a set of wood pulley frames and a set of steel ones invested for a period of thirty to fifty years—which will be about the life of wood frames—will probably more than compensate for any want of durability. For very large collieries, however, a steel structure is practically imperative.

The purpose of the headgear is two-fold—first, to support the pulleys upon which are carried the winding ropes, and secondly, to guide the cages from the surface or ground level to that of the discharging—or, as commonly expressed, "flat sheet"—level, and is really a continuation of the shaft above ground. The headgear may be designed so that the pulley frames are independent of the cage framing, which is probably the best way, or the two may be combined so that the cage frames also support the pulleys. The former is most generally adopted in this country, but abroad the latter method appears to be most in favour. Provision in

many cases must also be made for "crab" and "jack" ropes, for lifting pumps and spears when the pumping engine is on the surface, and this may be done by introducing a separate crab leg connected to the main legs or by making the cage framing sufficiently strong for all purposes.

It is difficult to formulate general rules for the design of headgears, as the difficulty is not to find the strength of the columns and struts to withstand bending or compression strains, but to obtain stiffness or rigidity and stability of the whole structure with the least weight of materials to withstand, in many cases, heavy loads suddenly applied and as suddenly taken off, and which are all affected by the

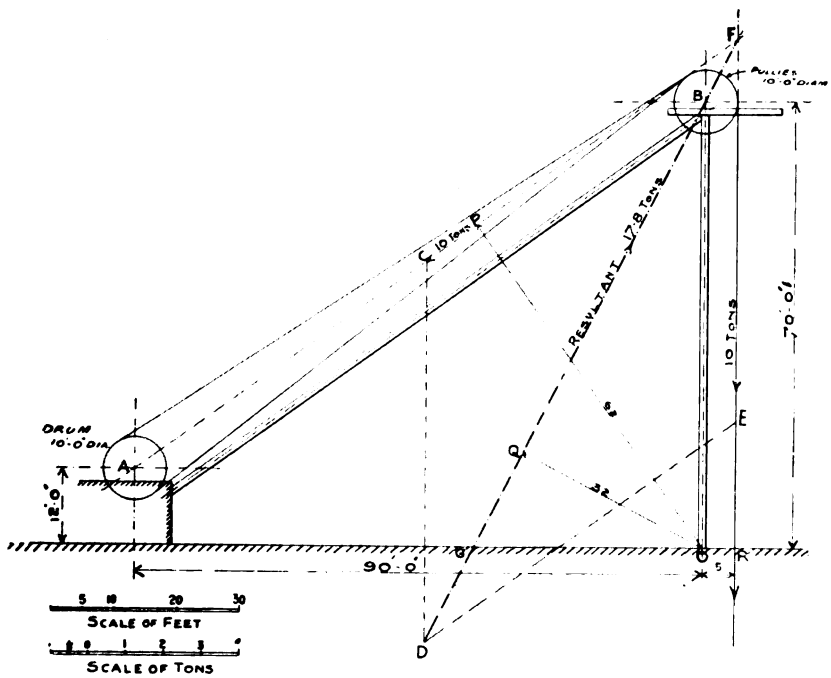

FIG. 216.—DIAGRAM SHOWING STRESSES ON HEADGEAR BY GRAPHIC CONSTRUCTION.

load, acceleration, and the height of the structure. It is seldom headgears are built too strongly, but there are cases where it has been necessary to add braces, struts and stays after the structure has been erected in order to obtain the necessary stiffness and stability, and it is not good policy therefore to economise by reducing the weight of material.

The first consideration is that of height, which obviously depends upon the distance from the ground level to the flat sheets, or landing stage, the height of the cage and length of cage chains, &c. The distance the cage has to be raised before

bringing the detaching hooks into operation, should be limited to, say, 10 to 15 feet, and the pulleys should be higher than this—just sufficient to allow the cage to be lifted out of the catches without the rope socket or capping coming on to the pulley. Having fixed the height, it becomes necessary to determine the form or shape of the structure, whether it should consist of two main legs to support the pulleys, and backstays to the engine to take the thrust due to the pull of the ropes, with a separate framing to guide the cages, &c., or whether to combine them. The former is probably the best, as the principal members of the structure are arranged to act directly against the load, in the most favourable positions for stability.

Fig. 216 shows, by graphic construction, stresses that have to be considered. A is the drum with the two ropes drawn from the top and bottom respectively to the pulleys B, which are 10 ft. in diameter. The height to the centre line of pulley is 70 ft., and the horizontal distance between the pulleys and drum is 90 ft. The centre line of the main legs O B passes through the centre of the pulleys at B, and the load on the ropes is suspended at a distance O R, equal to half the diameter of the pulley, and as the ropes leading to the drum are loaded alternately, the mean direction of the pull will be in the line A F drawn through the centre of the drum, and tangentially to the pulleys. The pull then acting along the line A F, must balance the weight acting vertically in the direction F R, consisting of the cages, tubs, coal and rope; and by marking off to scale the load on the lines A F and F R, the parallelogram may be completed by drawing the lines C D and D E, respectively parallel to F R and A F, and the resultant will be D F, passing through the centre of the pulleys. In the diagram a load of 10 tons has been assumed, made up as follows:—

HOISTING ROPE.

	Tons	cwt.
Weight of cage and chains	2	5
Weight of full tubs	3	10
Weight of rope	0	10
Total	6	5

LOWERING ROPE.

	Tons	cwt.
Weight of cage and chains	2	5
Weight of empty tubs	1	10
Total	3	15

And the resultant due to this load is 17·8 tons acting along D F.

The actual load, however, will be more than this, as the friction of the pulleys and extra strain on the rope due to acceleration and friction of guides has not been allowed for. Theoretically, all that is required is a single support, whose centre line is coincident with the line D F, and designed to carry the load equal to the resultant of the parallelogram, and its stability will depend upon

$$\frac{L \times PO - L \times OR}{QO} = DF$$

where L = the load.

In this case P O = 62, O R = 5, and Q O = 32, then

$$\frac{10 \times 62 - 10 \times 5}{32} = 17{\cdot}8$$

which agrees with the resultant of the parallelogram measured to scale. If, however, the foot at G be nearer O, then the pull of the ropes would overturn the support, whilst if the foot be moved further from O it will not resist the weight of the cages, &c., but part of its own weight would be added to the strain on the ropes.

Such an arrangement therefore tends towards instability, but this cannot be said of the structure comprising separate members to directly sustain the weight and resist the pull of the ropes. In the diagram the main legs are directly under the pulley bearings, and the backstays are parallel to the line A F, thus being in the most effective positions to resist the forces. The backstays are shown as usually arranged, but it will be noticed the centre line passes a little below the centre of the pulleys, and it would be better, therefore, to arrange the backstay a little higher, so that its continued centre line—parallel to line A F—will pass through the centre of the pulleys.

The cage framing being independent can be compactly designed to closely fit the cages, being carried upon strong soles placed across the mouth of the shaft, and being absolutely vertical is better able to resist the strains due to the cage coming upon the keps, or if guide ropes are used the strain due to the weight of these, and also in case of an overwind the shock of a loaded cage, freed from the winding rope, falling downwards, being suddenly arrested by the detaching hook.

Where the headgear is combined, four main legs, each resting upon an independent foundation, framed and braced together, with the backstays placed as near as possible in the line of the resultant as shown in fig. 216, is the usual arrangement. Such structures, however, are large and clumsy, occupy considerable room, and depend to some extent upon the weight and the area occupied at the base for their stability.

For wood structures the following formula agrees well with practice :—

W = Working load on winding rope due to rope, cage and chains, coal, and tubs in tons,

H = Height of structure in feet from ground level to centre of pulleys,

S = Side of square section of main legs in inches,

Then—

$$S = \sqrt[3]{\frac{W \times H^2}{8}}$$

Backstays = $\frac{5}{9}$ section of main legs, should be rectangular in section in the proportion of 3 to 4, the depth being at right angles to the plane of the line of backstays.

As an example, take the following .—

$$W = 6 \text{ tons},$$
$$H = 65 \text{ feet},$$

Then—

$$S = \sqrt[3]{\frac{6 \times 65^2}{8}} = \sqrt[3]{3170} = 14{\cdot}7,$$

say, 14¾ in. square at the middle, and allowing, say, 2 in. taper, 15¾ or 16 inches at the base, and 13¾ in. at the top. Back stays—

$$\frac{5}{9} \times 14{\cdot}7^2 = 120$$

which gives as suitable dimensions 10 in. × 12 in. deep.

Wood pulley frames should be built of dressed timbers securely framed and bolted together, and thoroughly well painted.

One of the best examples of wood headgear is that of Broomhill Colliery, the general arrangement of which is shown in figs. 217, 218 and 219. It is constructed entirely of pitch pine. The main legs—which rest in cast iron shoes on concrete foundations—are 16 in. square at the base, tapering to 14 in. at the top, and surmounted with the crowntrees, to which the bearings of the pulleys are secured, and framed together to form a platform. The backstays are 10 in. by 12 in. rectangular section, framed and braced together, and rest in cast iron shoes bolted to the engine bedplate. The cage or shaft framing consists of four uprights each 12 in. by 12 in., supported upon strong pitch pine baulks across the pit, each pair being framed together with 12 in. by 6 in. buntons to which the steel rail cage guides are secured, and the kep buntons resting upon strong cast iron brackets are bolted to the two frames. At the ground level this framing is fitted with strong hinged gates, and at the top a platform is formed, the four uprights being framed together with 12 in. by 12 in. crowns, upon which rest the oak beams 18 in. deep, 15 in. broad, between which are fixed the cylinders for Ormerod's detaching hooks, and to further strengthen the outside crowns a strut is placed between these and the bunton immediately below ; and to give extra stability to the whole structure, 12 in. by 6 in. struts are put in between the two platforms, and the two sets of framing are bolted together. Handrailing surrounds both platforms, and an iron ladder connects the two, so that the pulleys, bearings, detaching hook cylinders, &c., may be examined and attended to with ease and safety.

Figs. 220 and 221 show in detail the main legs and plan of crowntrees, and fig. 222 detail of the cast iron foot. The sheaths are checked and double-tenoned

Fig. 217.

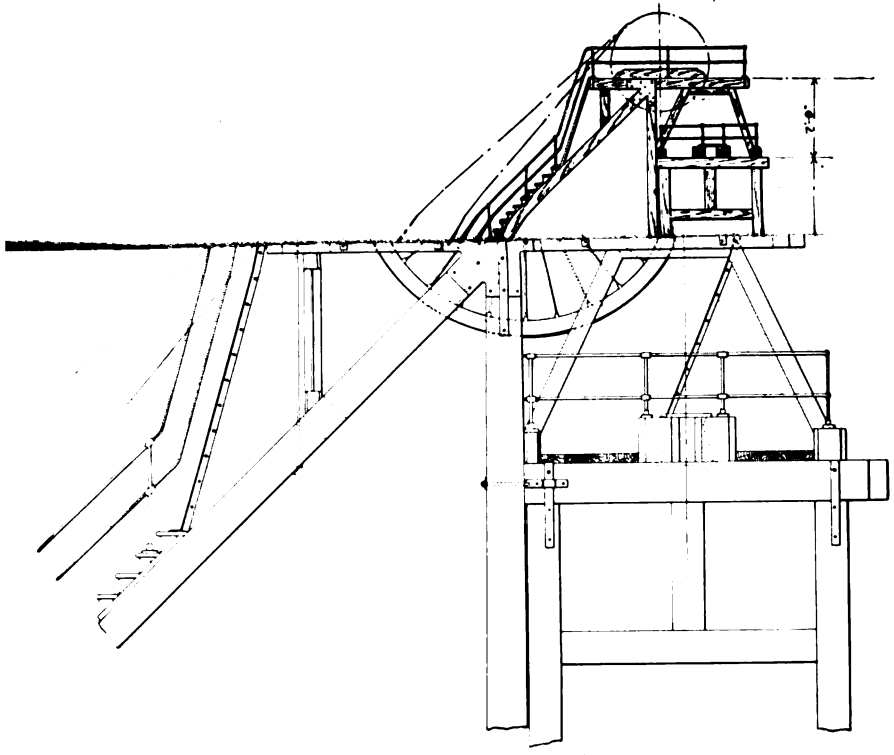

PLAN ON PULLEY PLATFORM.

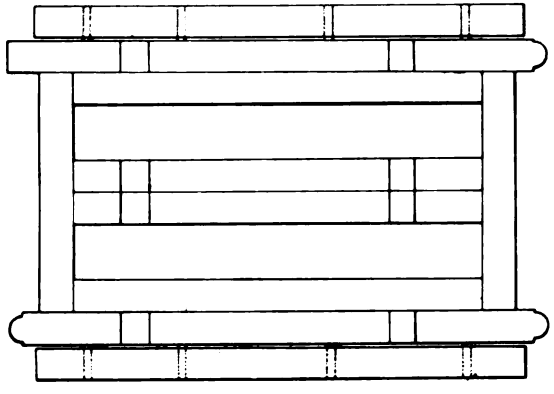

Fig. 231.

Fig. 218.

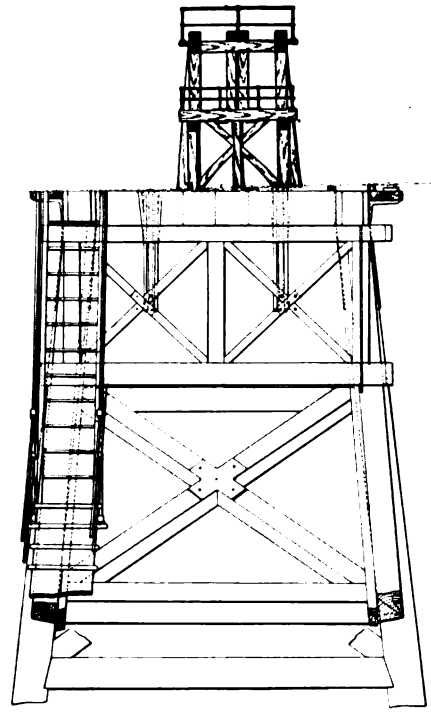

PLAN ON DETACHING HOOK BELL PLATFORM.

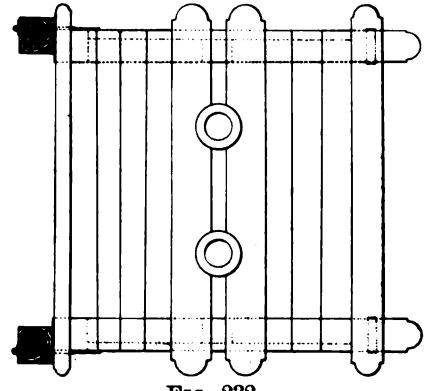

Fig. 232.

PLATE IX.

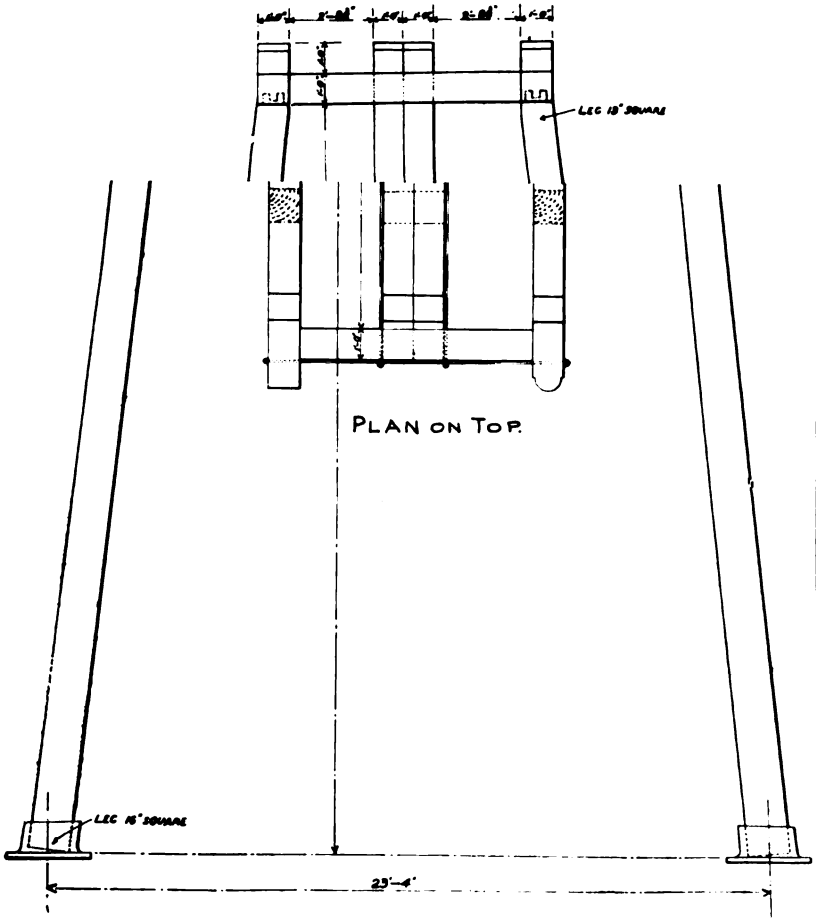

FIGS. 220 AND 221.
DETAIL OF MAIN LEGS.

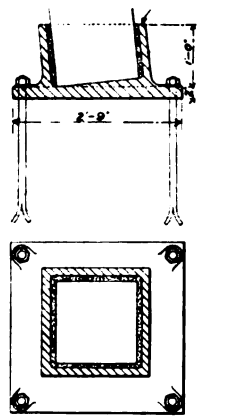

DETAIL OF CAST
IRON SHOE FOR FOOT.

FIG. 222.

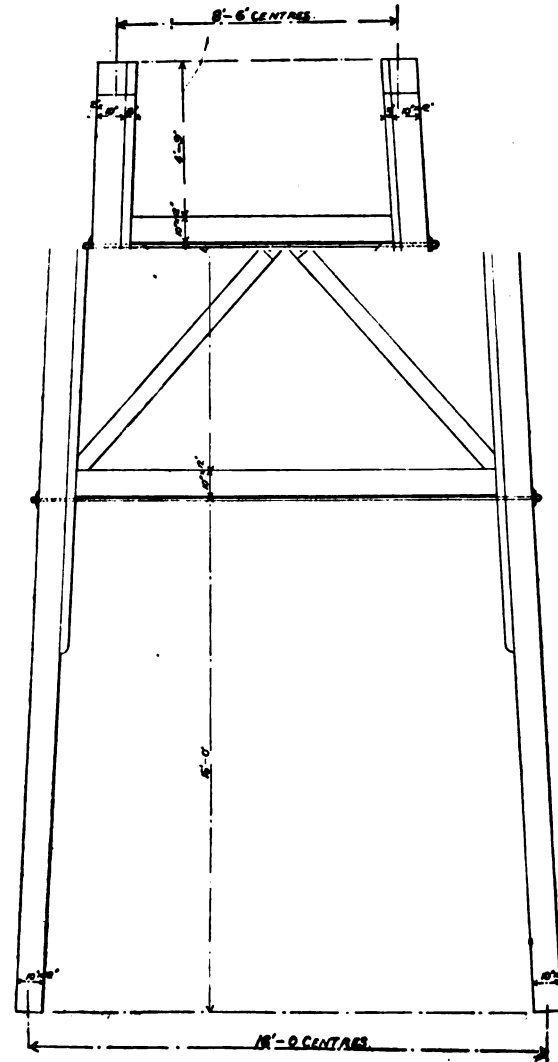

FIG. 225.
DETAIL OF BACKSTAYS.

PLATE X.

into the main legs, the diagonals being also tenoned as shown in the detail in figs. 223 and 224, fig. 224 being a perspective view of the double tenon. By checking the sheaths into the main legs their weight is taken off the tenons.

Fig. 225 shows in detail the backstays, fig. 227 showing the joint and fig. 226 showing in detail the form of tenon for the sheaths. As the backstays are in a more or less horizontal position, moisture is more liable to penetrate into the mortises and cause the tenons to rot, consequently the sheaths and diagonals are not mortised into the two principals, but into 10 in. and 3 in. pieces spiked to the latter, so that, should it be necessary to renew the former, this could be done

FIG. 227.

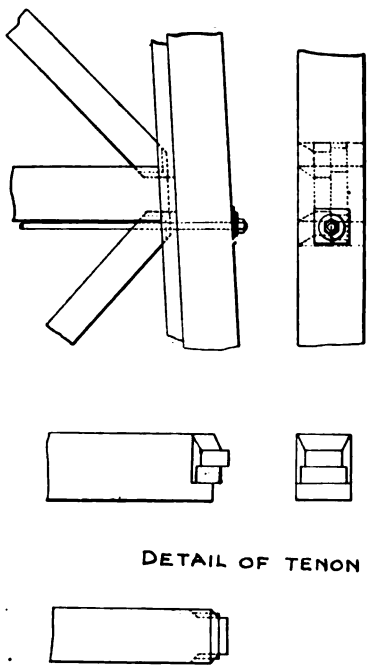

FIG. 226.

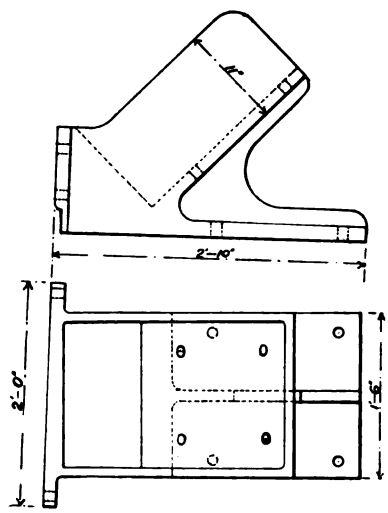

FIG. 228.

without disturbing the principals. As the weight of the sheaths and diagonals must be taken by the tenons, these are made as shown in fig. 226, from which it will be seen they are nearly the full width of the timber, and stepped to form checks, the diagonals being also stepped in the same way, thus forming a strong and substantial joint. A detail of the cast iron foot, which is bolted to the engine bedplate, and in which the backstays rest, is shown in fig. 228.

As in wood structures the most destructive element is moisture, great care should be taken to see that the joints are close and well fitted, and before finally

putting them together coat the tenons and mortises well with paint, and where the legs fit into cast iron boxes, coat well with Stockholm tar; in fact, it is a good plan to fill the box or shoe with tar before the timber is inserted, and allow it to squeeze the surplus out.

Figs. 229 to 232 show four views of the top of the headgear, figs. 229 and 230 being a side and end view respectively, fig. 231 a plan of top of pulley platform, and fig. 232 a plan of lower safety hook platform.

The following particulars regarding this installation may be of interest:— Engine, horizontal, cylinders 27 in. diameter by 5 ft. stroke, drum 10 ft. diameter; boiler, steam pressure, 45 lb. per square inch; winding ropes, 4 in. circumference, improved plough steel, Lang's lay; diameter of pulleys, 10 ft.; depth of shaft from flat sheet to flat sheet, 45 fathoms; load on winding rope, 6 tons; load on lowering rope, 4 tons. The cages are double deck, carrying two tubs on each deck, each tub having a capacity of 10 cwt. Time occupied in winding, 13 seconds; time changing, 22 seconds; and 2,000 tons can be drawn in eleven hours.

Headgears of steel are variously constructed of lattice girders, composed of four angle bars joined together by short flat bars, either diagonally and horizontally arranged, or diagonally only; of steel channel bars, or I steel joists, or of girders built up from steel plates and angle bars. The first has the advantage of less weight, and less resistance to wind pressure is claimed, but its construction is costly, and weight in a headgear is no disadvantage. For collieries with moderate outputs steel channel bars or I joists answer very well, but where heavy loads are to be dealt with, the main legs and back stays at least should be of the built-up box type, the cost of which will compare favourably with the lattice type, whilst the former has the advantage of being a thorough, lasting and substantial job.

An excellent example of lattice bar headgear by Messrs. Markham and Co. is shown in figs. 229a, 230a and 231a, consisting of four main legs with backstays. The front legs are 2 ft. by 1 ft. 9 in., whilst the legs directly under the pulleys are 2 ft. square. The backstays are also 2 ft. square, and supported by struts from the main legs, and a short lattice bar column 2 ft. by 1 ft. 6 in. from the ground level. Fig. 232a illustrates another example of lattice type headgear in course of erection by Messrs. Jos. Cook and Sons, and consists of four main legs and backstays, the latter being supported by struts to the ground level. As will be seen, the framing in both examples consists of angle bars joined together with crossed diagonal and horizontal lattice bars, which is the best and strongest form of construction. Very often the horizontal bars are left out, and again some makers do not think it necessary even to cross the diagonals, but merely zig-zag them, which may be cheap, but is certainly not to be recommended. In fig. 230a the cage is shown in

the position it would occupy if overwound, resting upon safety keps fixed in the headgear. In ordinary working the tubs are changed at the ground level.

Figs. 233, 234 and 235 illustrate another type of lattice framing, consisting of main legs and backstays, by Messrs. Mulholland, Maugham and Co. In this case the backstays come against the engine-house wall, the engine being of the vertical

FIG. 235.

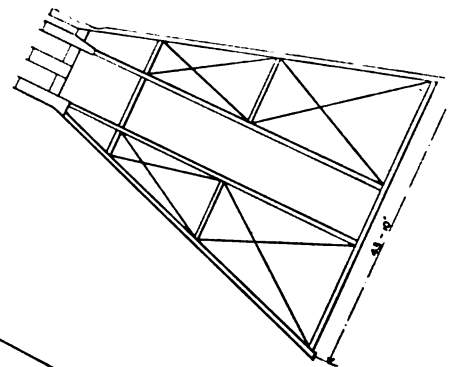

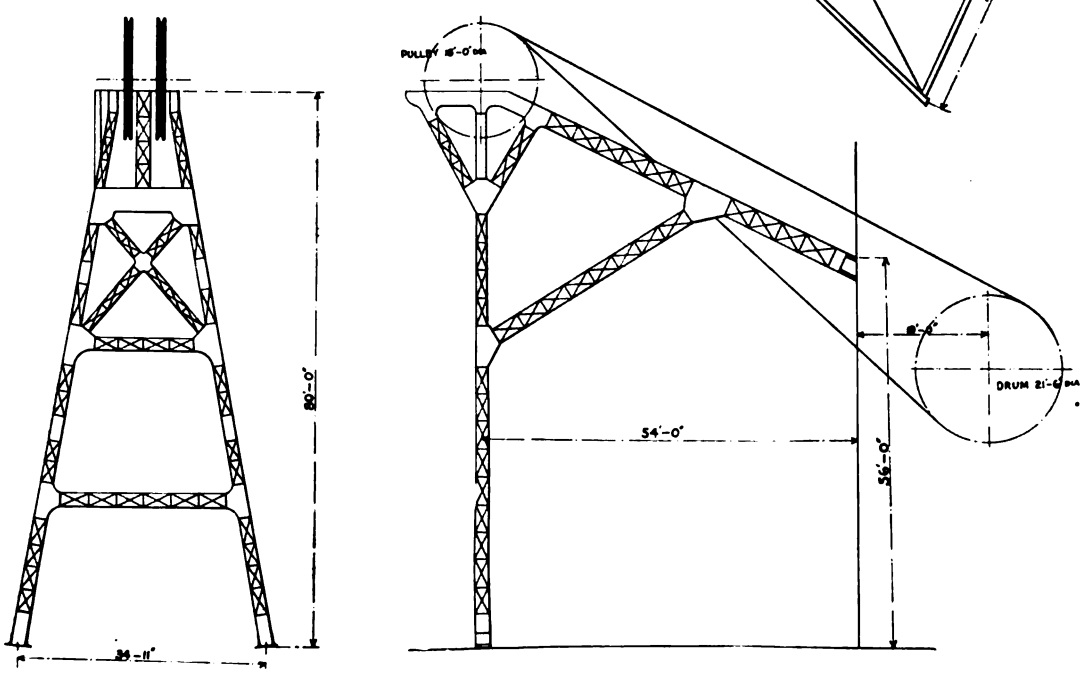

FIG. 233. FIG. 234.

HEADGEAR FOR VERTICAL WINDING ENGINE.

type with the drum above the cylinder ; and as the lower rope is below the backstays, they are built with a clear opening between them for the rope, as shown in plan in fig. 235.

Another headgear by Messrs. Mulholland, Maugham and Co. Limited, constructed of steel joists, is shown in figs. 236, 237 and 238. In order to stiffen

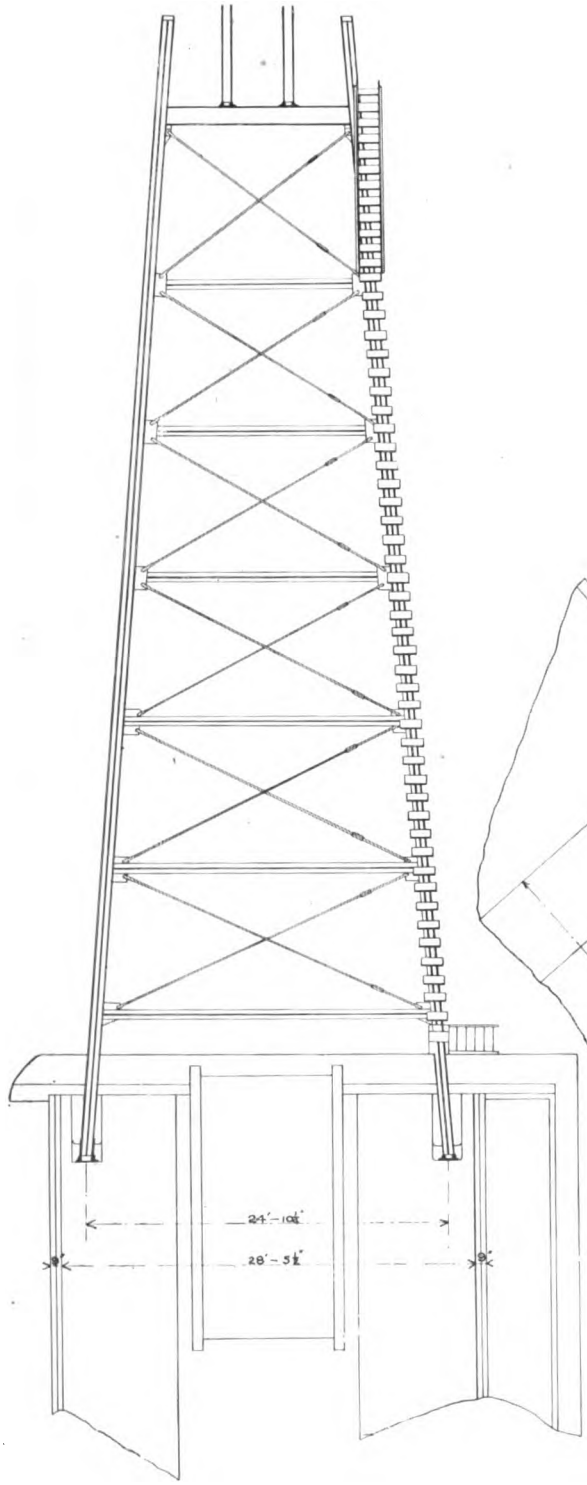

FIG. 243.—PLAN OF BACKSTAYS.

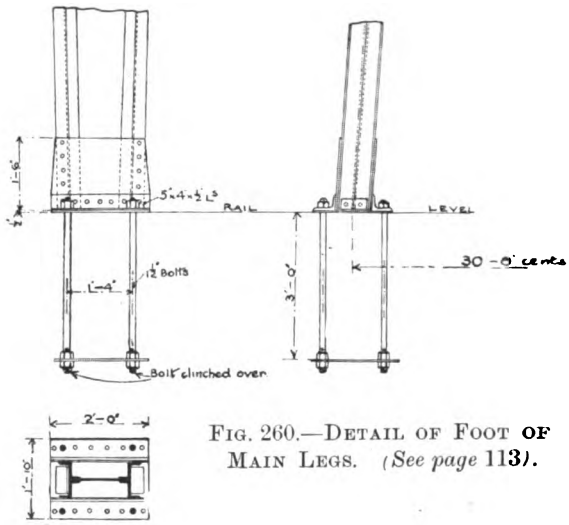

FIG. 260.—DETAIL OF FOOT OF MAIN LEGS. (*See page* 113).

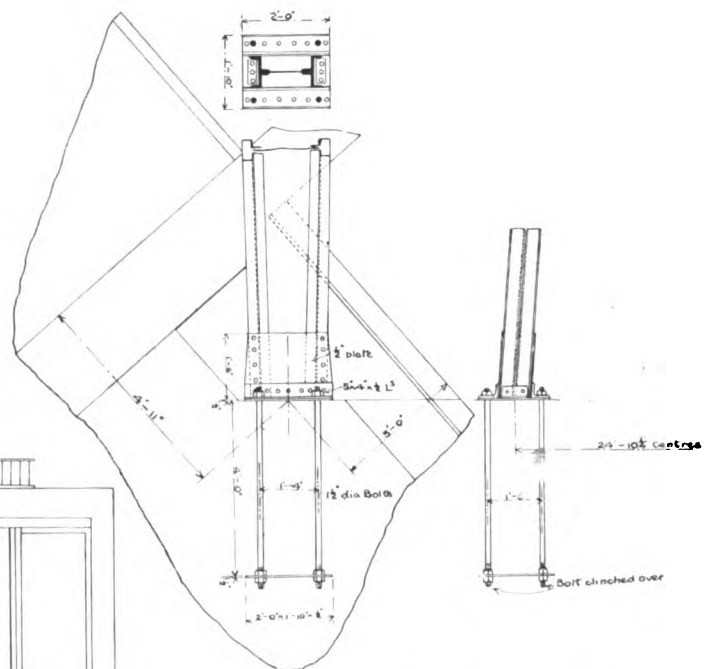

FIG. 244.—ENLARGED VIEW, SHOWING METHOD OF SECURING FOOT OF BACKSTAY. (*See page* 113).

PLATE XI.

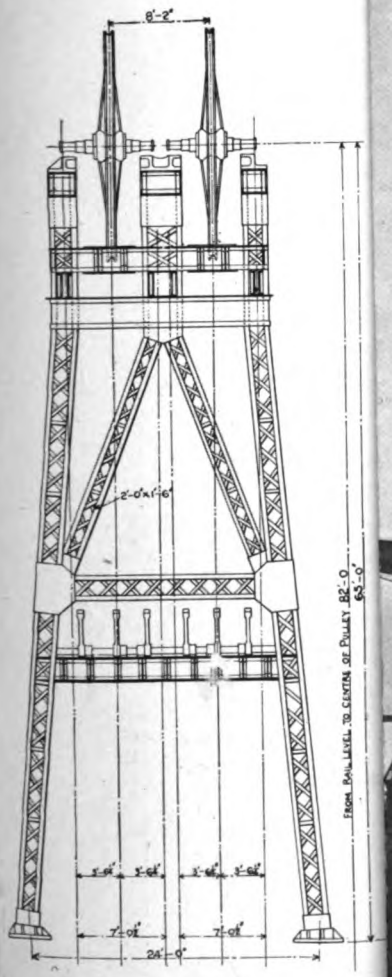

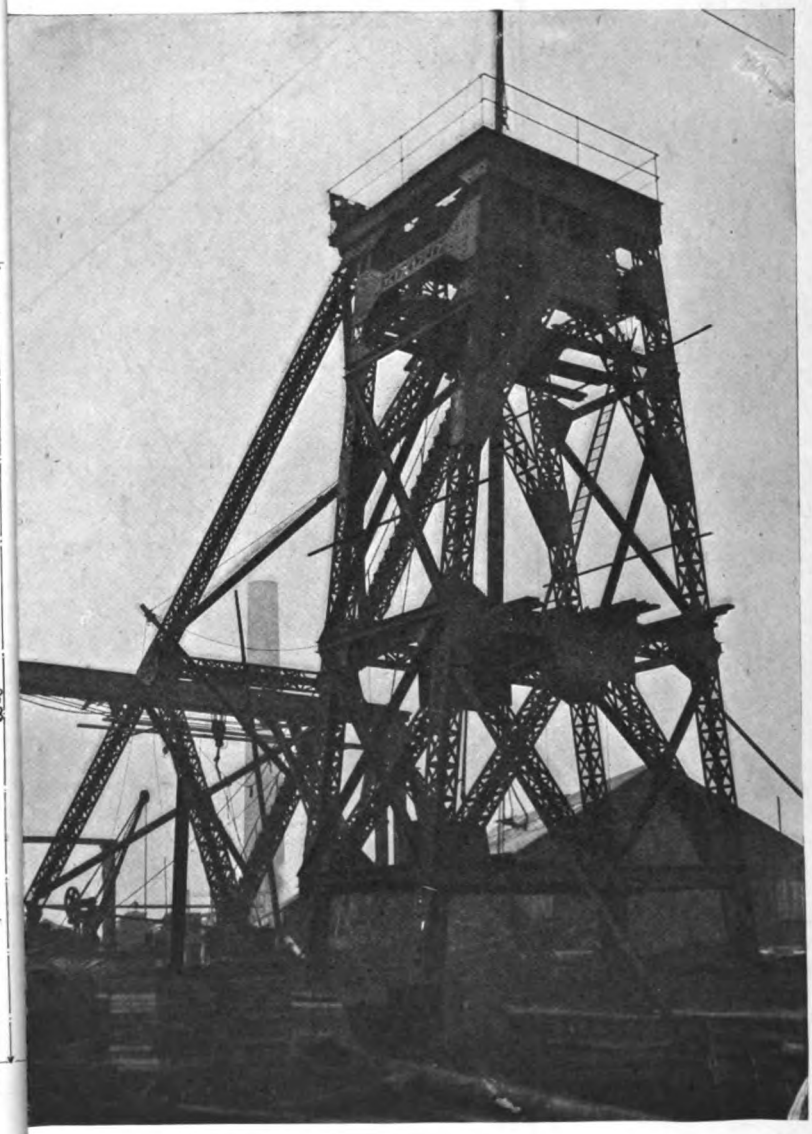

FIG. 232A.—LATTICE HEADGEAR. *(See page 110).*

PLATE XII.—(*See pages* 111 *and* 113.)

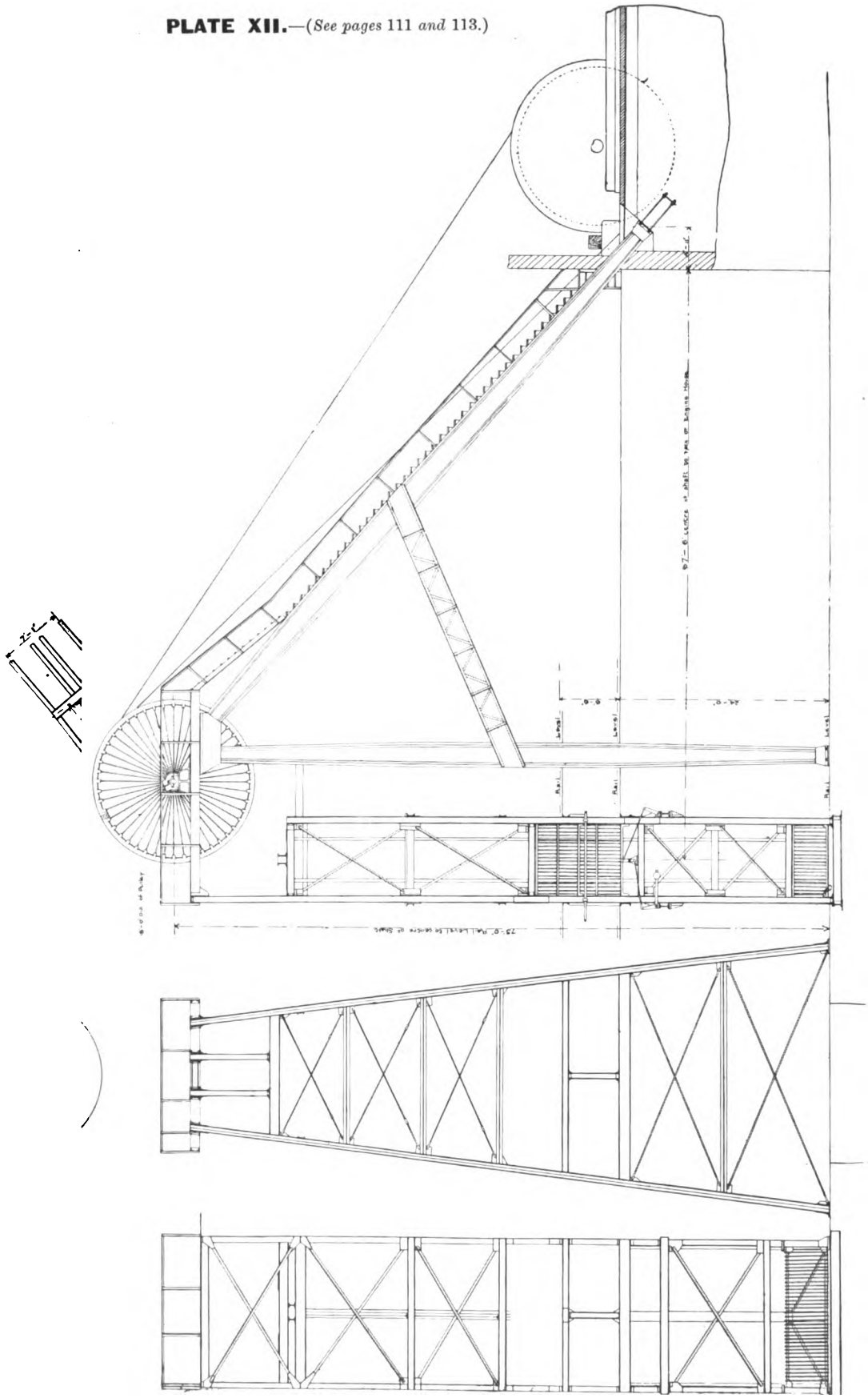

FIG. 239.

FIG. 240.

FIG. 241.

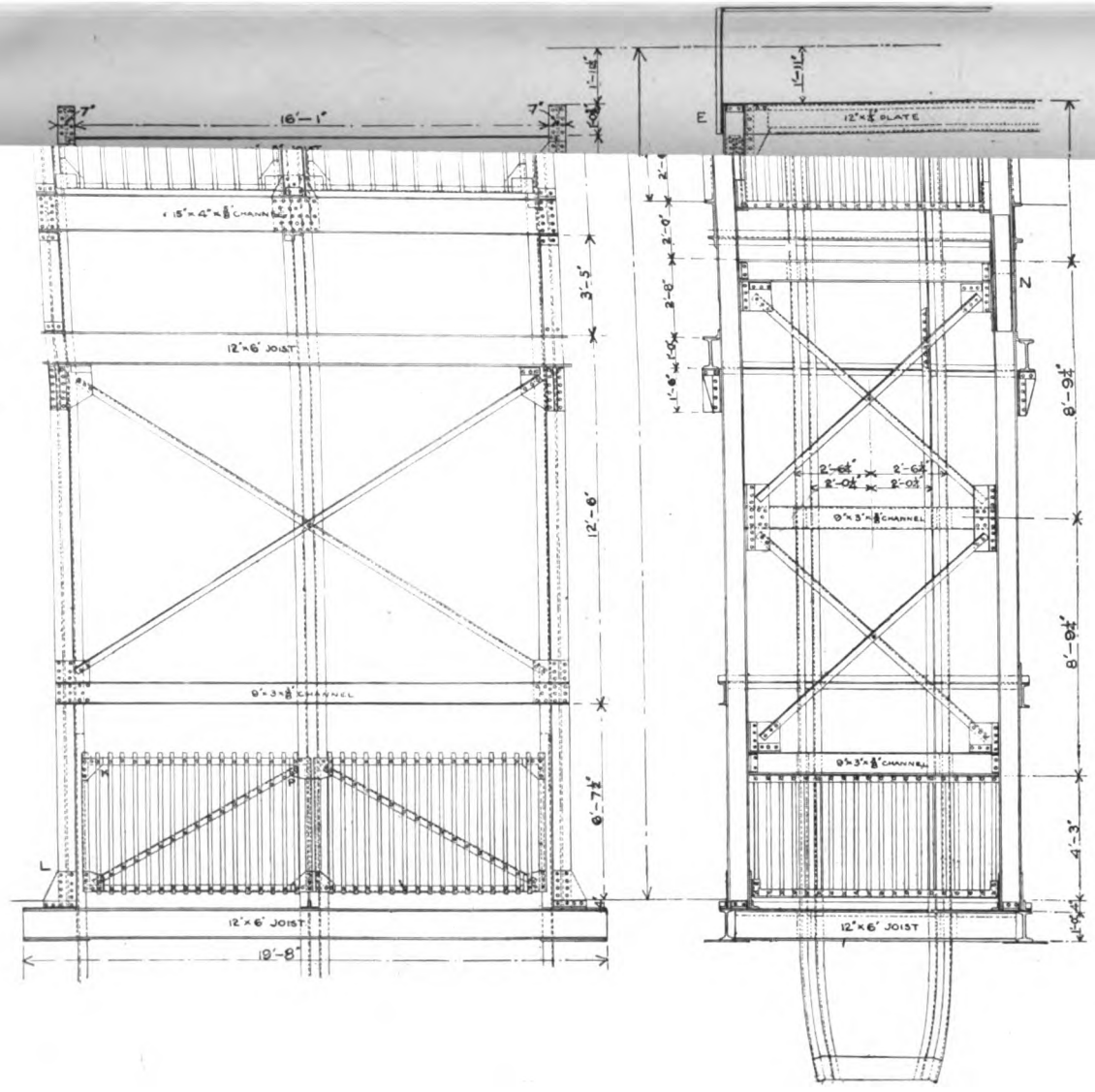

PLATE XIV.

FIG. 261.

FIG. 262.

DETAIL OF CAGE FRAMING AT TINGLEY COLLIERY.

PLATE XIII.

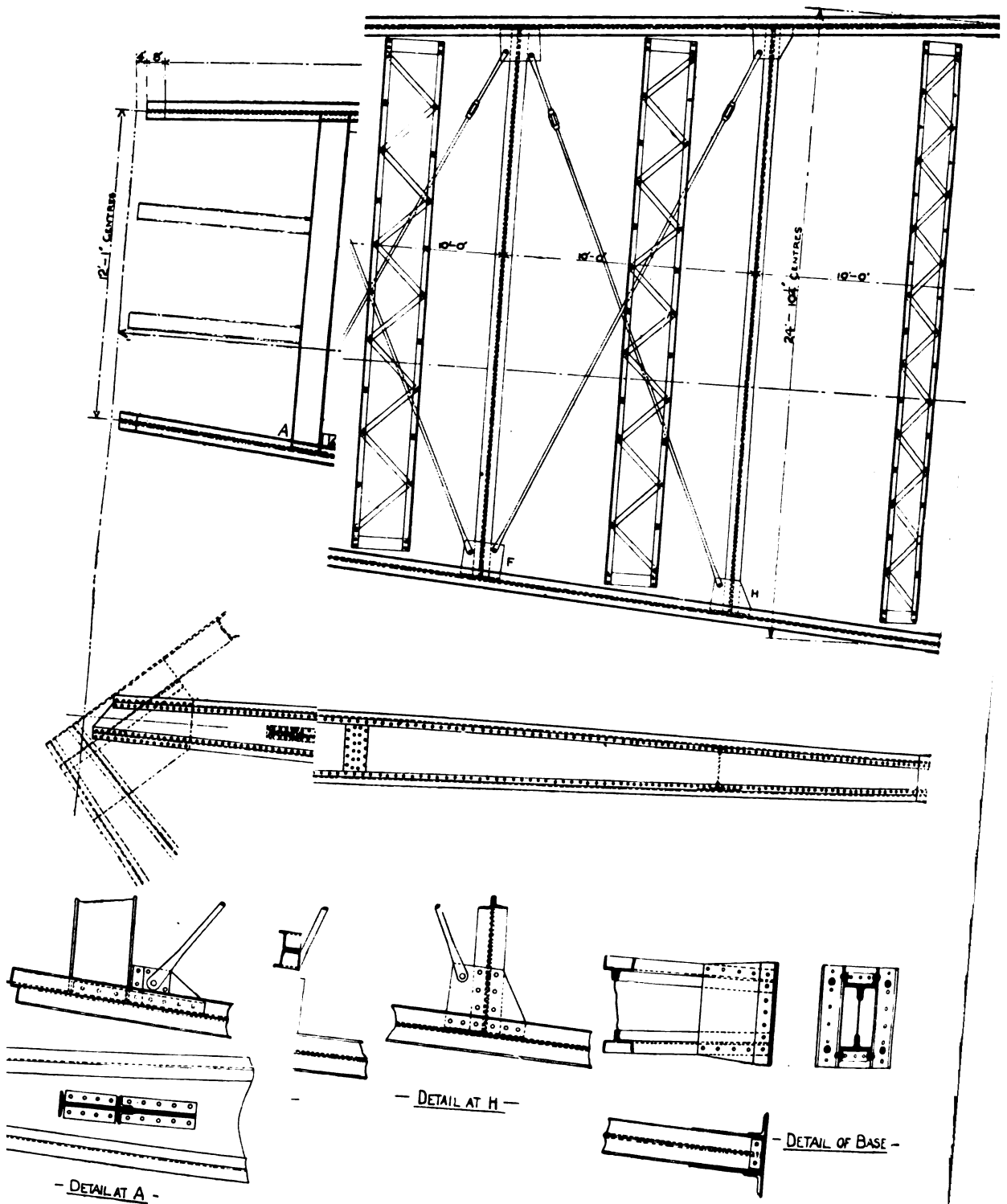

FI

UCTION OF BACKSTAYS. *(See page 113.)*

the joists forming the main legs, the firm rivet to the I joists, channel bars, as shown in the section A A, nearly to the top. The backstays are supported by struts and columns from the surface level, and rest on the engine foundation, and to avoid the excessive sagging and swaying of the ropes, a frame carrying rope rollers is built to the backstays, as shown in fig. 236. The cage framing consists of I joists, supported upon girders across the shaft.

A particularly fine example of headgear is that built for the Yorkshire Iron and Coal Company's Tingley Colliery, by the Teesside Bridge and Engineering Works Limited, the general arrangement of which is shown in figs. 239 to 242. The main legs and backstays are constructed from four Z bars 5 in. × 3 in. × 2½ in. × ⅜ in., riveted to a $\frac{5}{16}$ in. web, 2 ft. 6 in. broad at the centre

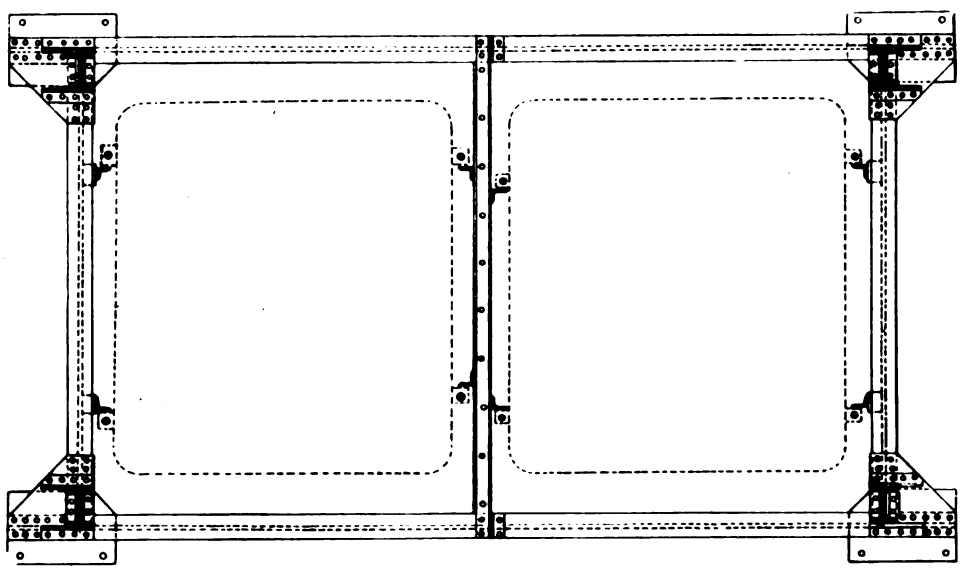

FIG. 263.—PLAN OF CAGE FRAMING.

and tapering towards each end, so as to give the necessary stiffness to resist bending, and, in fact, the depth of the cross section—which is about $\frac{1}{30}$ of the length—is sufficient to render the strut between the main legs and the back stays quite unnecessary.

The main legs and backstays of the headgear at Tingley Colliery are tied together by cross struts, formed from 3½ in. × 3 in. × ⅜ in. angle bars stiffened with 2½ in. × $\frac{5}{16}$ in. lattice bars, and four diagonal tie bolts, each 1⅜ in. diameter, between each pair of struts, drawn together by right- and left-hand screws and a long nut. Figs. 245 and 246 to 259 are details of the backstays and show clearly the method of framing. The main legs rest on solid concrete foundations, 6 ft. by

6 ft. by 4 ft. deep, a detail of the foot being shown in fig. 260. The backstays are secured to the engine pillars, and this end is shown in detail in fig. 244.

The cage framing of the headgear at Tingley Colliery (figs. 261, 262 and 263) is constructed from I joists, the four main uprights being 9 in. by 7 in., tied together by channel bars and angle bar diagonals, resting upon a framing over the shaft built from 12 in. by 6 in. joists. The keps are supported on 12 in. by 6 in. joists, secured to brackets riveted to main uprights. The two front uprights are continued to the same height as the main pulley legs, and support the outer end of the girders carrying the pulleys.

Figs. 264 to 271 are details of the top of pulley frames at Tingley Colliery, from which it will be seen that the main legs are not directly under the centre line of the pulleys, the difference being a distance of 3 ft., which is certainly a disadvantage, throwing, as it does, a small proportion of the weight upon the front legs of the cage framing. This, however, frequently happens, as it is not always that a suitable foundation for the main legs can be had directly under the centre line of the pulleys, owing to the proximity of the shaft. Details showing construction of the shaft framing are given in figs. 272 to 279, which show the very substantial character of the structure.

The cages are double-decked and changed simultaneously on two floors, and are nearly square, being 7 ft. 9 in. by 7 ft., and work in guide ropes, but in order to steady them when changing tubs, angle iron guides are fitted to the framing as shown, and the rope guide shoes are arranged to work into them, thus reducing any tendency towards swaying of the cage due to this cause, and which begins its descent perfectly steady. The following are the particulars of the load upon the structure:—

Total load = 44 tons.

Load on each base =	Tons.
Dead load	9·5
Live load	8·125
Total working load	17·625

Area of steel base, 3·6 square feet.

Load per square foot = 5 tons.

Area of concrete base 6 ft. × 6 ft. = 36 square feet.

Load per square foot = ·71 ton.

And the structure is designed with a factor of safety of 5.

The right-hand principal of the backstays is fitted with steps and handrail to give easy access to the pulleys, the details of which are given in figs. 280 to 286. Very often the steps are of chequered plate made only the width of the backstays, forming a very insecure foothold, but in this case the steps are 18 in. wide, 9 in.

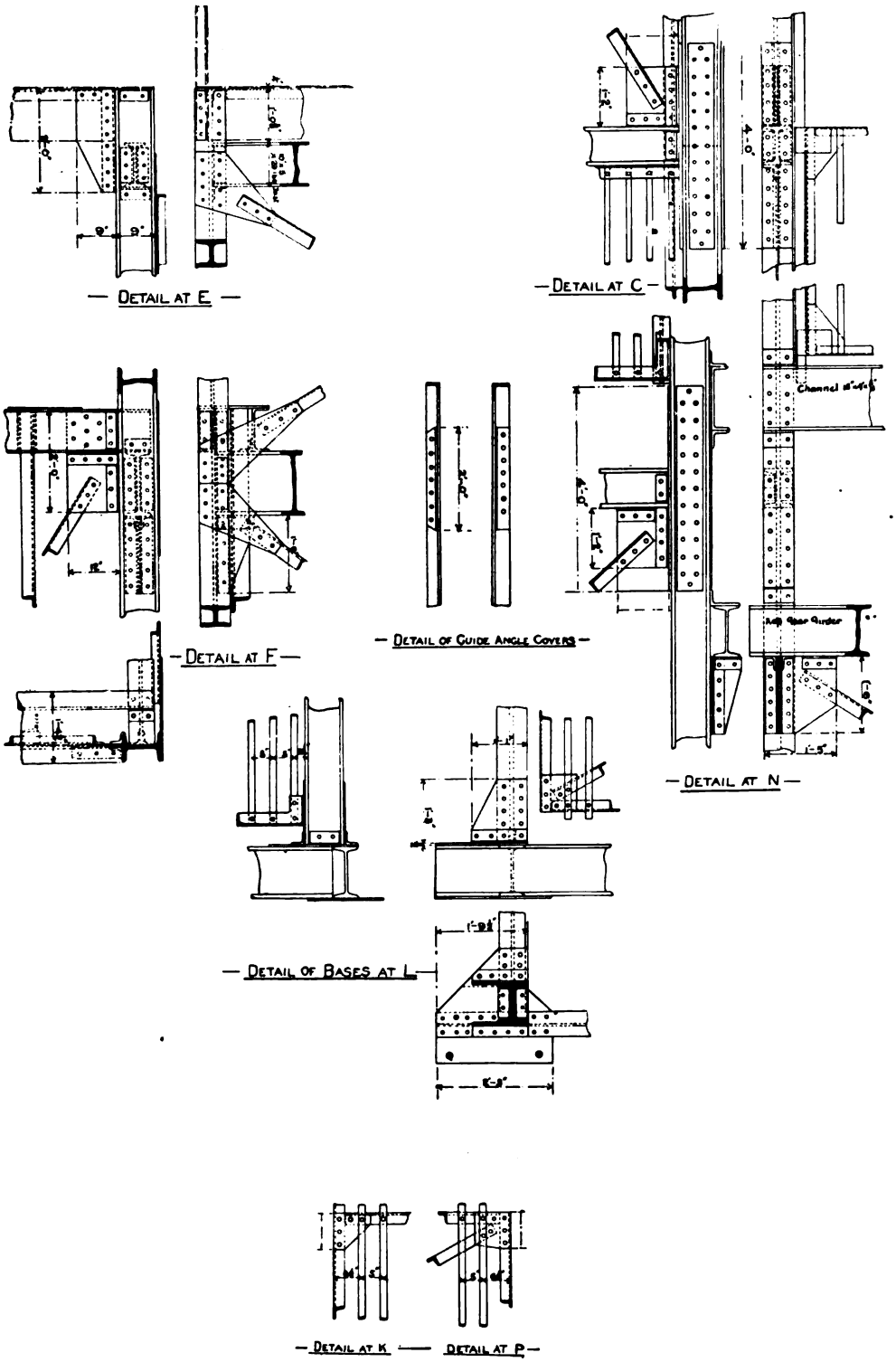
— Detail at E —
— Detail at C —
— Detail at F —
— Detail of Guide Angle Covers —
— Detail at N —
— Detail of Bases at L —
— Detail at K —— Detail at P —
— Details of Gates —

FIGS. 272 TO 279.—DETAILS SHOWING CONSTRUCTION OF SHAFT FRAMING.

broad, and of oak, with an angle iron handrail on each side which forms an excellent and secure stairway. A side ladder gives access from the ground level to the backstay.

The principal members of a headgear may be considered as long columns in compression, with one end fixed and the other free, which would ultimately give way by bending. In the following formulæ let:—

W = total load on column in pounds,
E = coefficient of elasticity = 30,000,000 for mild steel,
I = moment of inertia of section,
P = greatest working stress per square inch of area,
L = length of column in inches,
N = factor of safety,
A = area of section,
K = radius of gyration of section,

Then—

$$W = 2\tfrac{1}{2}\,\frac{E\,I}{N\,L^2}, \qquad (1)$$

$$I = \cdot 4\,\frac{W\,N\,L^2}{E}, \qquad (2)$$

and

$$P = 2\tfrac{1}{2}\,\frac{E\,K^2}{N\,L^2} = 2\tfrac{1}{2}\,\frac{E\,I}{N\,A\,L^2}. \qquad (3)$$

The total load on the main legs will be that due to the maximum strain on the ropes, the weight of the pulleys and platform, and half the weight of the backstays. In designing a headgear for any working load, the thrust upon the backstays will be that due to this load, and the moment of inertia (I) may be determined by means of (2), from which the section may be designed, and its weight calculated, and the pressure due to the weight of the backstays upon the main legs ascertained. The main legs may now be designed in the same way and checked by either (1) or (3).

Table A gives values of A, I and K^2 for sections commonly employed.

In the case of built-up columns of separate sections the radius of gyration should be taken about an axis through the centre of figure of the complete section of column, and when this is parallel to the axis of the separate section, may be calculated from the following formulæ:—

K = radius of gyration about an axis of separate section,
k = radius of gyration about a parallel axis,
H = distance between parallel axes.

Then

$$k^2 = K^2 + H^2 \qquad (4)$$

TABLE A.

Form of section.	Areas of section A.	Moment of inertia of section I.	Square of radius of gyration of section $K^2 = \frac{I}{A.}$
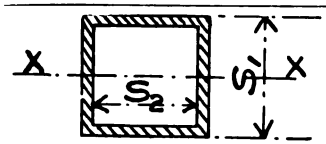	$S_1^2 - S_2^2$	$\cdot 0833\ (S_1^4 - S_2^4)$	$\cdot 0833\ (S_1^2 + S_2^2)$
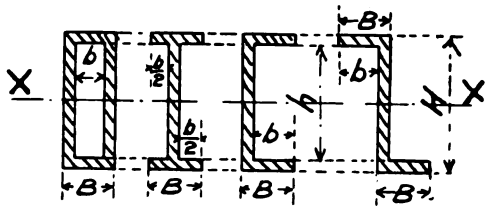	$BH - bh$	$\cdot 0833\ (BH^3 - bh^3)$	$\cdot 0833\ \frac{BH^3 - bh^3}{BH - bh}$
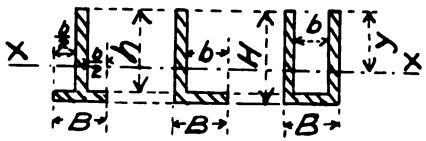	$BH - bh$ $y = \frac{BH^2 - bh^2}{2BH - bh}$	$\frac{(BH^2 - bh^2)^2 - 4BH\,bh\,(H-h)^2}{12\,(BH - bh)}$	$\frac{(BH^2 - bh^2)^2 - 4BH\,bh\,(H-h)^2}{12\,(BH - bh)^2}$
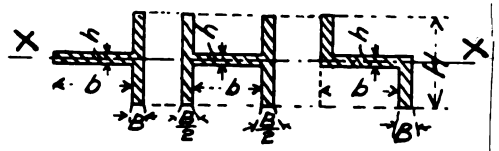	$BH + bh$	$\cdot 0833\ (BH^3 + bh^3)$	$\cdot 0833\ \frac{BH^3 + bh^3}{BH + bh}$
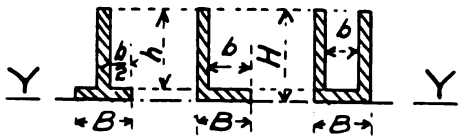	$BH - bh$	$\cdot 33\left[(B-b)\,H^3 + b\,(H-h)^3\right]$	$\cdot 33\ \frac{(B-b)\,H^3 + b\,(H-h)^3}{BH - bh}$

X X Axis through centre of gravity of figure. Y Y Axis at base of figure.

Thus in the case of the four angle bars of a lattice bar column, the complete section will be thus, with an axis Y Y parallel to the axis $y\,y$ at the base of the separate angles, and the new value of k^2 will be for each angle bar

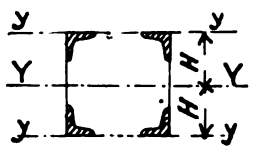

$$k^2 = K^2 + H^2$$

The moment of inertia I about an axis $y\,y$ of each separate angle bar will be

$$I = K^2 \times A$$

and the moment of inertia I_1 about an axis Y Y of each separate angle bar will be

$$I_1 = A\,k^2$$

and for the four angle bars

$$4\,I_1 = 4\,A\,k^2 = 4\,A\,(K^2 + H^2)$$

The factor of safety usually adopted is from 5 to 7, depending upon the style of the structure. The hollow box section is undoubtedly the strongest and stiffest form, and columns of this type are usually built with a gradual taper from bottom to top of one-tenth to one-eighth of an inch per foot.

To prevent deflection of the backstays, they may be supported by means of special columns from the surface level, or by means of a strut between the backstays and main legs. Both main legs and backstays should be securely braced together, the backstays nearly the full length and the main legs for a distance of at least one-third from the top, and as headgears have to support live loads, they should be designed liberally as regards strength.

To illustrate the use of the formulæ the following example may be taken :—

Working load on ropes = 10 tons,
Height to centre of pulleys = 70 ft.,
Length of backstays = 100 ft.
Factor of safety = 5.

Find dimensions of hollow box section, main legs and backstays.
Load on backstays = 10 tons. Then

$$I = \cdot 4\,\frac{10 \times 2{,}240 \times 5 \times (100 \times 12)^2}{30{,}000{,}000} = 2{,}150{\cdot}4,$$

which is the moment of inertia to carry the whole load. As, however, there are two backstays, the required I of each backstay will be half this amount or

$$I = \frac{2{,}150{\cdot}4}{2} = 1{,}075{\cdot}2$$

Taking a rectangular hollow section as best adapted to resist deflection, then

$$\cdot 0833\,(B\,H^3 - b\,h^3) = 1{,}075{\cdot}2,$$

from which

$$B\,H^3 - b\,h^3 = \frac{1{,}075{\cdot}2}{\cdot 0833} = 12{,}907,$$

and taking the outside dimensions as 20 in. deep by 12 in. wide

$$B H^3 = 12 \times 20^3 = 96{,}000,$$

and $b h^3 = 96{,}000 - 12{,}907 = 83{,}093$, which gives for $b h^3 = 11\frac{3}{8} \times 19\frac{3}{8}$ nearly, and the thickness of the plates as $\frac{5}{16}$ in. Suitable corner angle bars will be 3 in. × 3 in. × $\frac{3}{8}$, and the weight of the backstay will be about 5 tons, or, say, with bracing 5·3 tons.

The main legs may now be considered, and the total weight upon these may be taken as

	Tons.
Load on rope	10
Half-weight of backstays	5·3
Pulleys, platforms, &c. ....say	5·7
Ropes .....say	1·0
Total	22

Then

$$I = \cdot 4 \frac{22 \times 2{,}240 \times 5\,(70 \times 12)^2}{30{,}000{,}000} = 2{,}318 \cdot 1$$

and as there are two main legs, I for each will be

$$I = \frac{2{,}318 \cdot 1}{2} = 1{,}159.$$

Taking a hollow box section, 12 in. square at the top, and allowing a taper of 8 in. gives 20 in. square at the base. The mean will therefore be 16 in. square, and

$$\cdot 0833\,(S_1^4 - S_2^4) = 1{,}159$$

from which

$$S_1^4 - S_2^4 = \frac{1{,}159}{\cdot 0833} = 14{,}000 \text{ nearly},$$

and

$$16^4 = 65{,}536$$

so that

$$S_2^4 = 65{,}536 - 14{,}000 = 51{,}536,$$

which gives 15^4 nearly. The section therefore becomes 16 in. outside × 15 inside, or plates $\frac{1}{2}$ in. thick, and, as before, suitable angle bars will be 3 in. × 3 in. × $\frac{3}{8}$ in. for joining the plates together. By making the dimensions slightly larger, thinner plates may be used. Thus, by making the outside dimensions 17 in. square

$$17^4 = 83{,}521$$

and

$$16 \cdot 24^4 = 83{,}521 - 14{,}000 = 69{,}521 \text{ nearly},$$

which gives plates $\frac{3}{8}$ in. thick, and allowing 10 in. taper, say, 12 in. square at the top, and 22 in. square at the base.

It is necessary to protect the entrance to the shaft at the flatsheet and surface level by gates. At the former the gates are usually automatically opened by the cages as they come to bank, whilst the latter, which are only occasionally used, are

kept locked and open upon hinges. There are many arrangements of automatic gates, the commonest being one which works between slides, or on vertical guide rods, and fitted with brackets which catch upon the cage hoop, and are thus raised as the cage comes to bank, and lowered again as it descends. The gates may be of wood or iron, and where the velocity of the cage when approaching the surface is low, works well; but with quick winding, the velocity of the cage is so great that the gates are broken in a very short time, requiring constant attention and repair, and one method to overcome this difficulty is to have only two or three bars sliding upon vertical iron rods, so arranged that each horizontal bar rests upon a thickened portion of the vertical rods, about one foot or so apart. The lowest bar has the largest holes, the middle bar the next largest, and the top bar the smallest, and the thicknesses or diameters of the vertical rods correspond to these holes. On the cage coming to bank, it first lifts the bottom bar, then the middle, and finally the top, and again on descending, the bottom bar slips over the thickened portions which support the middle and top bars, whilst the middle bar slips over the portion which supports the top bar, and consequently the bars are left on their supports one after the other as the cage descends.

Another arrangement where the previous method is not applicable is shown in fig. 287. In this case the gate consists of two loose bars of wood threaded upon two spindles secured to the bottom bar, with steel spiral springs between them, the bars working in angle bar guides at the ends. The bottom bar is caught by the cage as it ascends, and raises the whole gate, the springs cushioning the shock due to the inertia of the middle and top bars, and works well with a very high speed of winding.

At the Lady Victoria Pit, Newbattle, the gates are not lifted by the cage, as owing to the large dimensions which would be necessary, ordinary gates are impracticable. The gates are of iron suspended from a small trolley running upon a steel rail hinged at one end and attached to a simple system of levers at the other. These are automatically worked by the cage, in such a manner so that when the cage comes to bank it lifts the end of the rail and forms an inclined plane down which the gate runs, coming to rest opposite the gate covering the entrance to the other cage. The gates are thus set one in advance of the other. On the cage descending, the end of the rail is lowered forming an inclined plane in the opposite direction and the gate consequently runs back to its former position.

When the upcast shaft is arranged for winding, shaft gates are sometimes closed doors, which are lifted by the cage, the cage bottom fitting close to the framing over the shaft to prevent leakage of air as much as possible when the door is open, the bottom of the cage, in fact, taking the place of the door. At the surface level it is usual to arrange an air lock and double doors, which should be

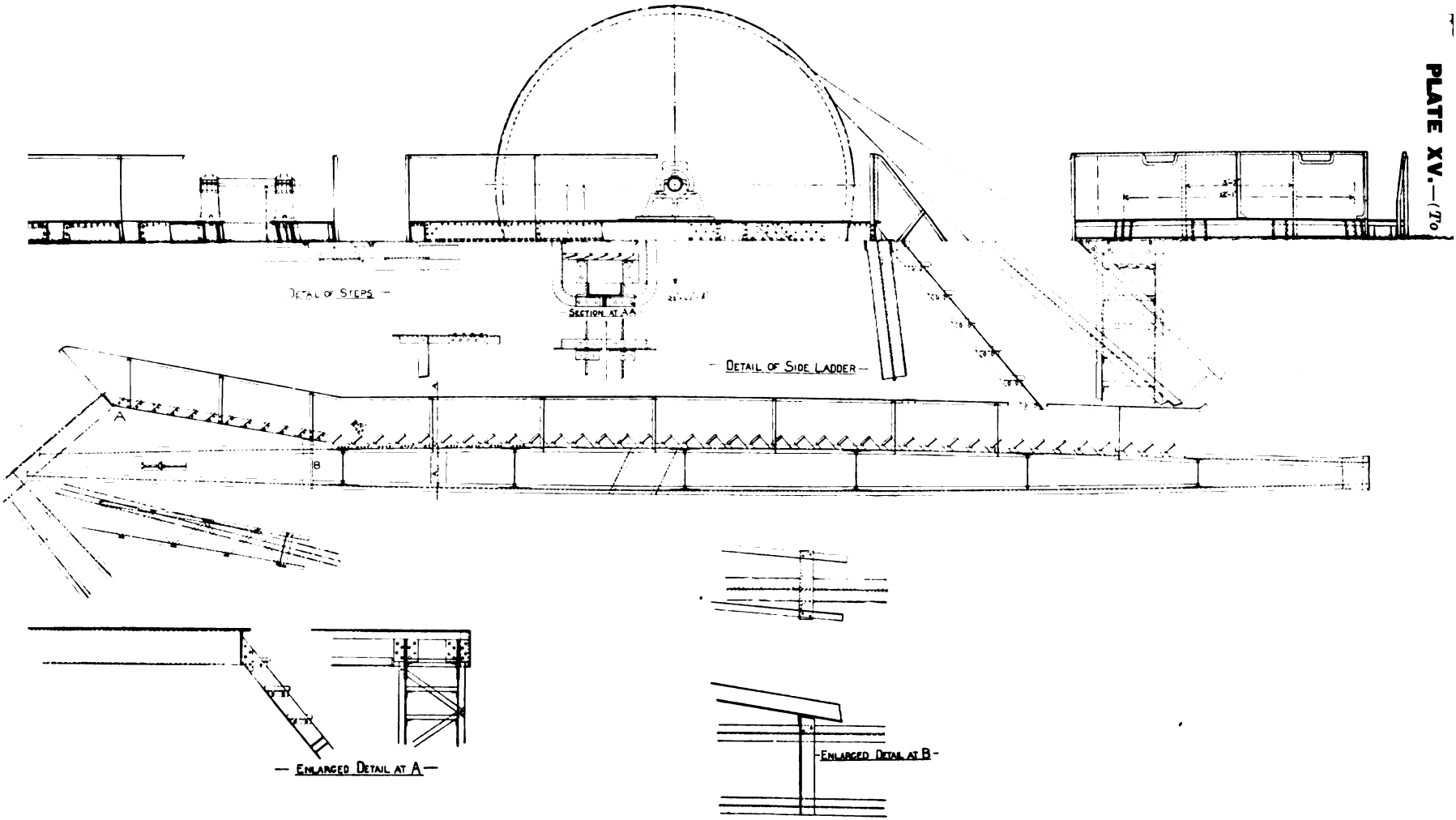

FIGS. 280 TO 286.—DETAILS SHOWING CONSTRUCTION OF STAIRWAY ON BACKSTAY.

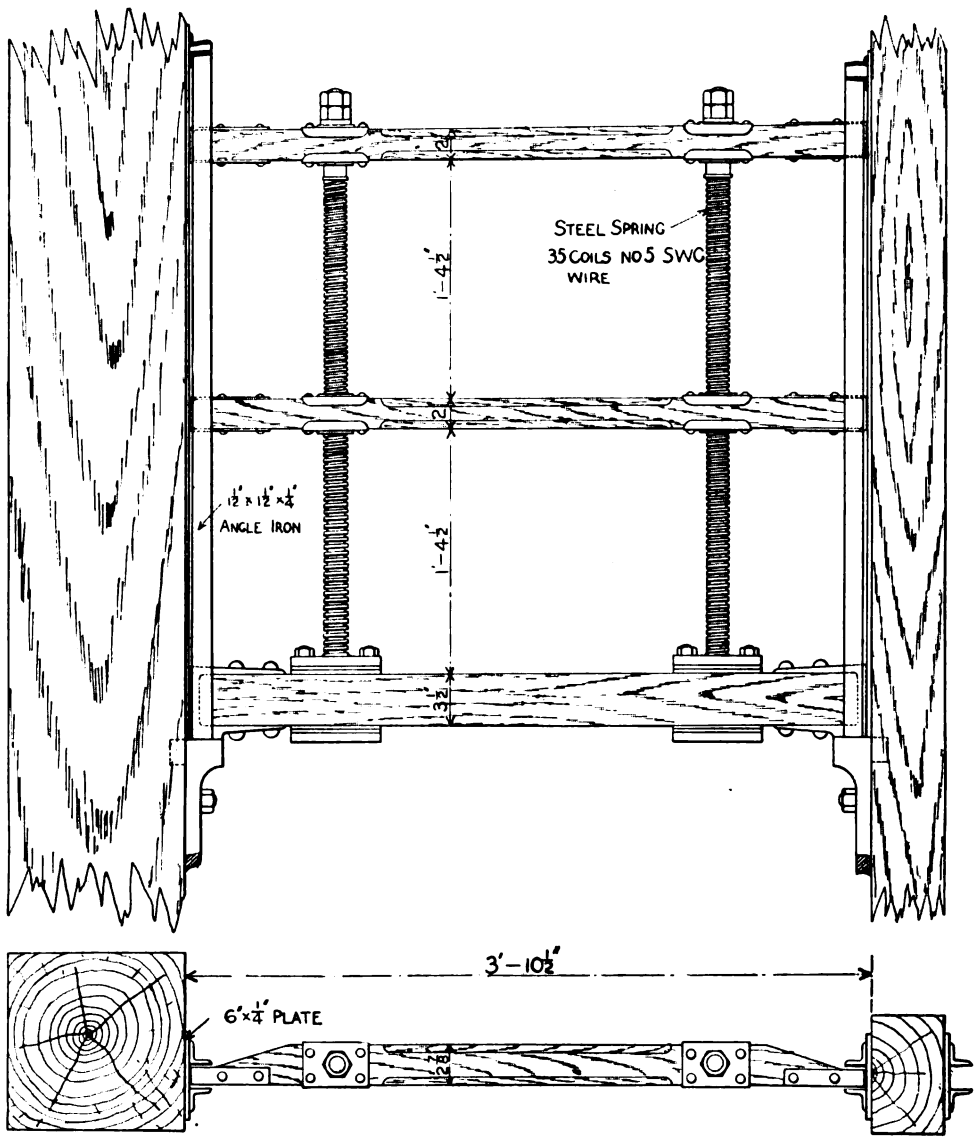

FIG. 287.—AUTOMATIC SHAFT GATE.

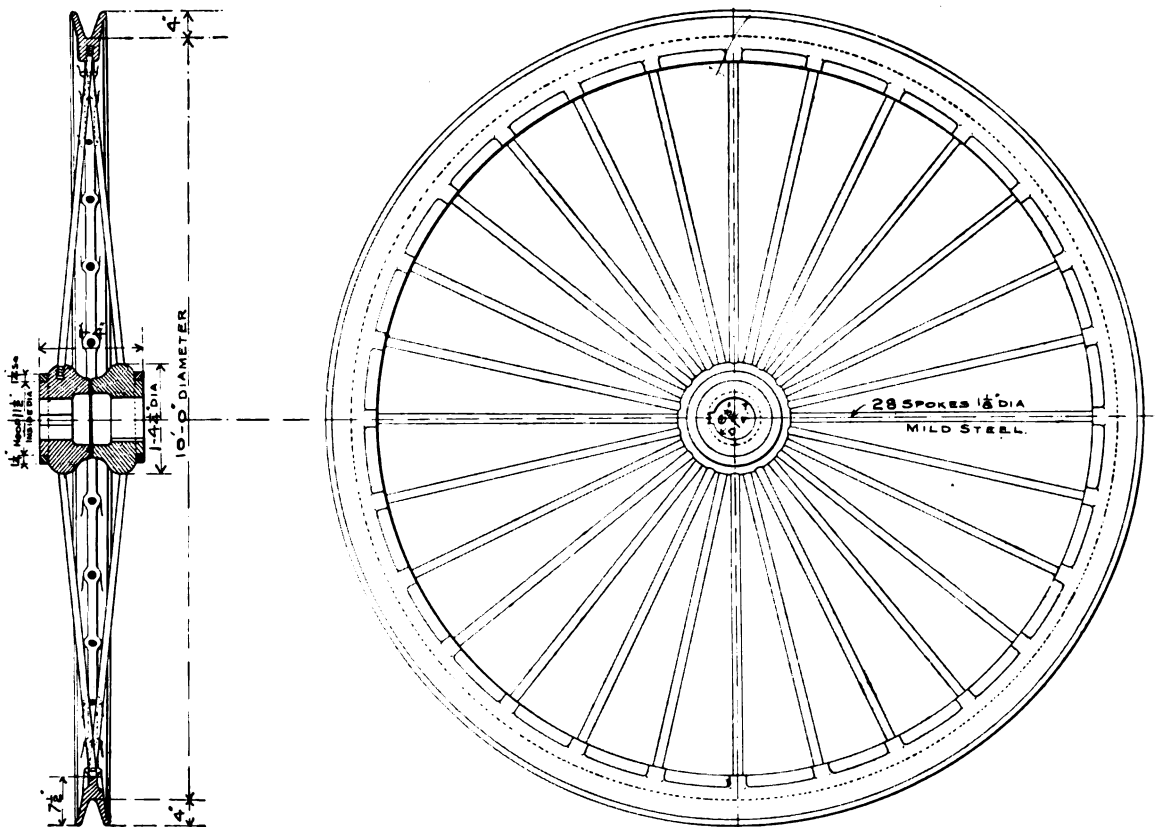

FIGS. 288 AND 289.—10 FT. DIAMETER ORDINARY HEADGEAR PULLEY.

large and roomy in order to facilitate the changing of cages. Another arrangement which is also used sometimes on downcast shafts is to have a large lid, a little larger than the size of the cage, with an opening through which the rope passes, and which is raised by a stop on the rope socket, when the cage comes to bank, and is suspended above it. In the case of upcast pits, the shaft is close cleaded below the flatsheet level for a distance equal to the height of the cage, and forming a box equal in size to its area. The cage enters this box before it lifts the lid, and leakage of air is prevented by the cage bottom. In other cases the headgear and pit bank are completely enclosed so as to be airtight, leaving only a small opening at the top through which the rope passes. Air locks with double doors and windows are arranged to give light and access to the shaft.

Where the cages are loaded at some point in the shaft, the gates are worked by hand, and in all cases a cord attached to the gate should work an indicator situated in front of the engineman in the engine-house, or some other means adopted, so that he may know when the gate is shut, and he should not move the cage, even though he has received the signal to do so, until the gate has been closed. Automatic gates are very seldom fitted to the shaft bottom, though to prevent accidents due to workmen crushing to get into the cage, collapsible or other gates worked by hand during the time men are ascending and descending might with advantage be adopted.

Headgear pulleys should be as large in diameter as possible, and are usually in this country made with cast iron rim and boss and wrought iron or steel spokes. Great care should be taken in casting the pulleys to reduce as far as possible strains and distortion due to contraction. Messrs. Mulholland, Maugham and Co. Limited have found it best to cast the rim first and some days later the boss. They should be as light as is consistent with the required strength in order to reduce the inertia and allow the pulleys to at once adapt themselves to the varying speed of the ropes without any unnecessary attrition. Figs. 288 and 289 show a good example of a pulley 10 ft. in diameter. The journals should be as small as is consistent with the strength required, and should be long enough to avoid heating. Often the cause of heating is because they are too short, and the bearings should be fitted with lubricators, or better still with some form of self-oiling bearing so as to run for fairly long periods without attention, as they are in a position likely to be neglected, especially if the only means of access is—as sometimes may still be seen—by means of wooden rungs nailed to a vertical leg.

Figs. 290 and 291 show a pulley 20 ft. in diameter supplied by Messrs. W. Edward Kochs and Co. for the Wearmouth Coal Company's Hylton Colliery. The rim and hub are of cast iron, and the spokes of mild steel flat bars. The rim is in four segments, secured together by bolts and shrunk rings as shown. The recesses

TABLE B.—APPROXIMATE SIZES AND WEIGHTS OF ORDINARY PULLEYS.

Diameter of winding rope.	Diameter of pulley on tread.	Shaft.		Journals.		Diameter of boss.	Length of boss.	Number of spokes.	Diameter of spokes.	Approximate total weight, including shaft and bearings.
		Diameter.	Length.	Diameter.	Length.					
In.	Ft. in.	In.	In.	In.	In.	In.	In.		In.	Cwt.
$\frac{3}{4}$	5 0	4	24	3	6	8	9	10	$\frac{7}{8}$	9
$\frac{7}{8}$	6 0	$4\frac{1}{4}$	25	$3\frac{1}{4}$	$6\frac{1}{2}$	$8\frac{1}{2}$	9	12	$\frac{7}{8}$	10
1	7 0	$4\frac{1}{2}$	26	$3\frac{3}{4}$	7	9	10	14	1	11
$1\frac{1}{16}$	8 0	5	28	4	8	10	12	20	1	$13\frac{1}{2}$
$1\frac{1}{8}$	9 0	$5\frac{1}{2}$	30	$4\frac{1}{2}$	9	12	14	24	$1\frac{1}{16}$	16
$1\frac{3}{16}$	10 0	6	34	5	10	14	16	28	$1\frac{1}{8}$	25
$1\frac{1}{4}$	12 0	$6\frac{1}{2}$	38	$5\frac{1}{2}$	11	16	18	32	$1\frac{3}{16}$	35
$1\frac{5}{16}$	14 0	7	42	$5\frac{3}{4}$	12	18	20	36	$1\frac{1}{4}$	50
$1\frac{3}{8}$	16 0	$7\frac{1}{2}$	48	6	12	20	24	40	$1\frac{5}{16}$	70
$1\frac{7}{16}$	18 0	$8\frac{1}{4}$	54	$6\frac{1}{2}$	13	22	28	44	$1\frac{3}{8}$	95
$1\frac{1}{2}$	20 0	9	60	7	14	24	32	48	$1\frac{1}{2}$	110

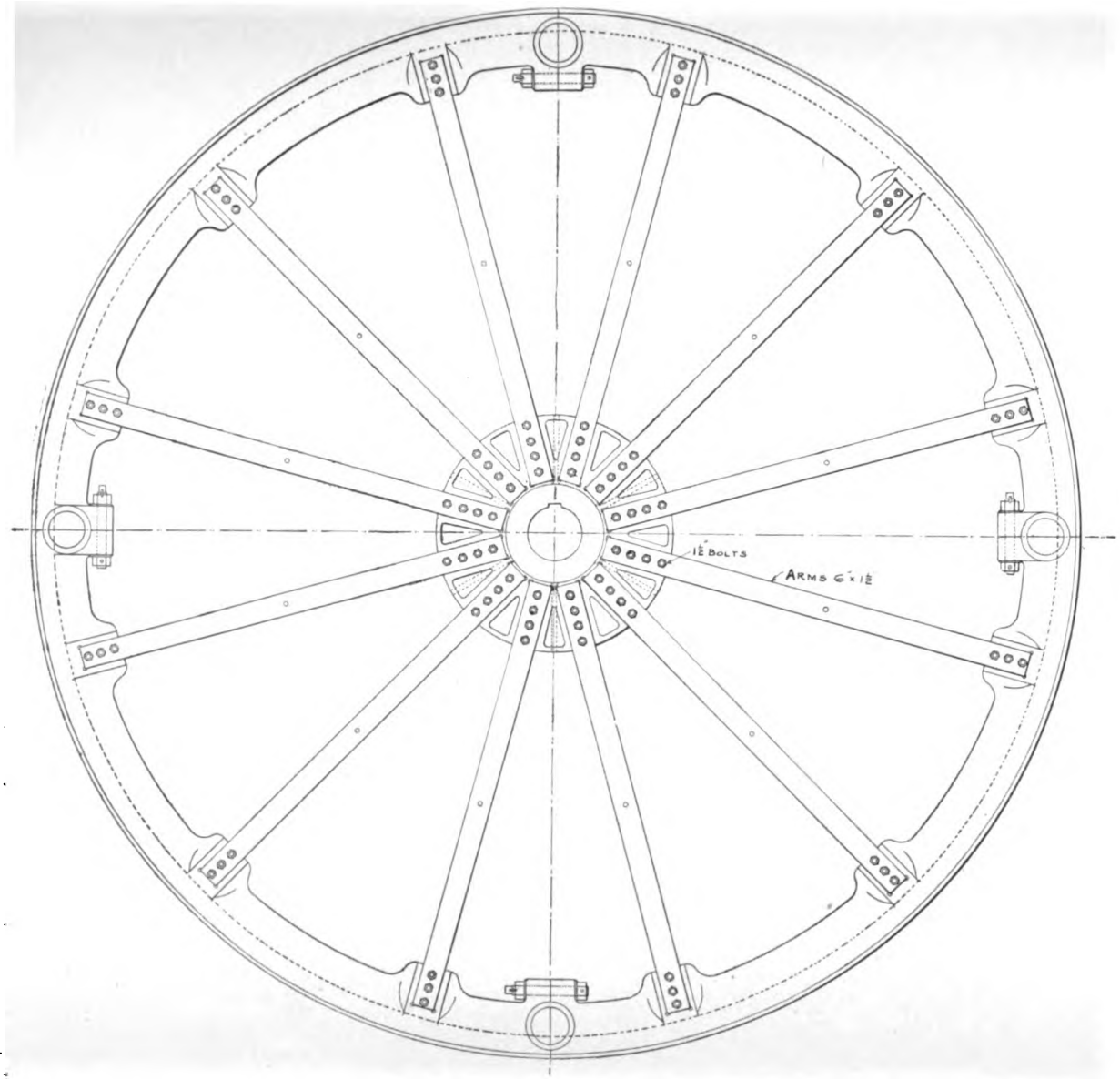

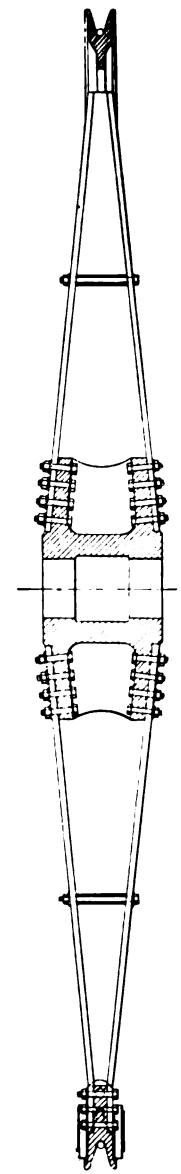

FIGS. 290 AND 291.—20 FT. DIAMETER BUILT-UP HEADGEAR PULLEY.

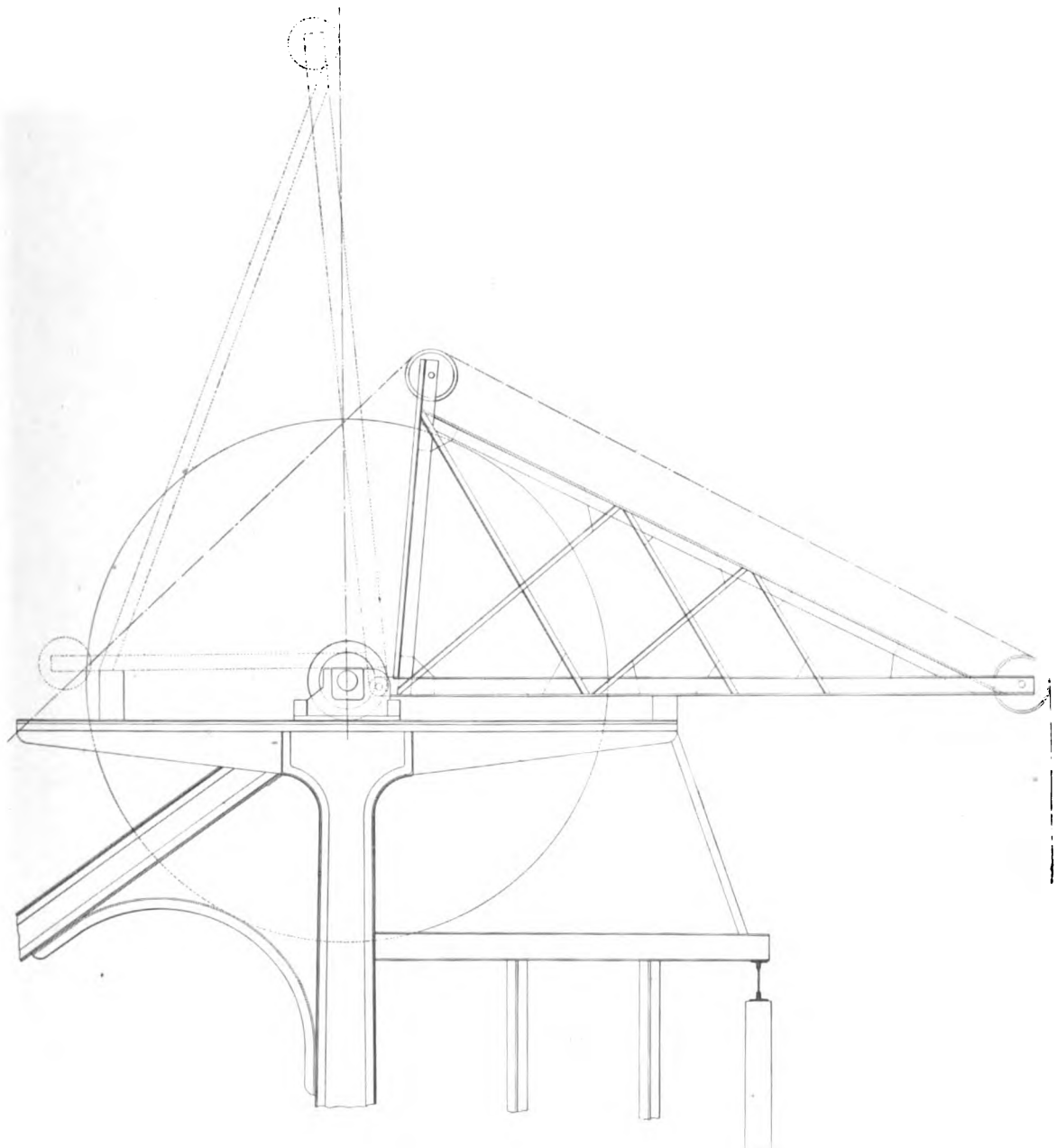

FIG. 293.—ELEVATION OF ARRANGEMENT FOR CHANGING HEADGEAR PULLEYS.

in both rim and hub are carefully machined to fit the ends of the spokes, so as to effect a close-fitting joint, and all the bolts are machined and are a driving fit in the holes, and the rim is turned both inside and out, so as to get the whole pulley absolutely true. Messrs. W. Edward Kochs and Co. can also supply these pulleys with wrought iron rims if required.

The proportions of ordinary pulleys are shown in fig. 292, the unit being taken

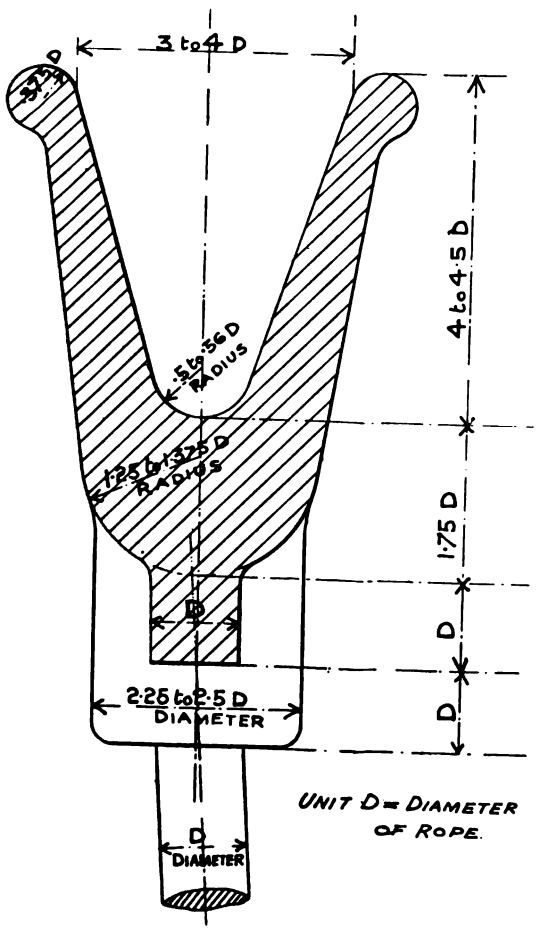

FIG. 292.

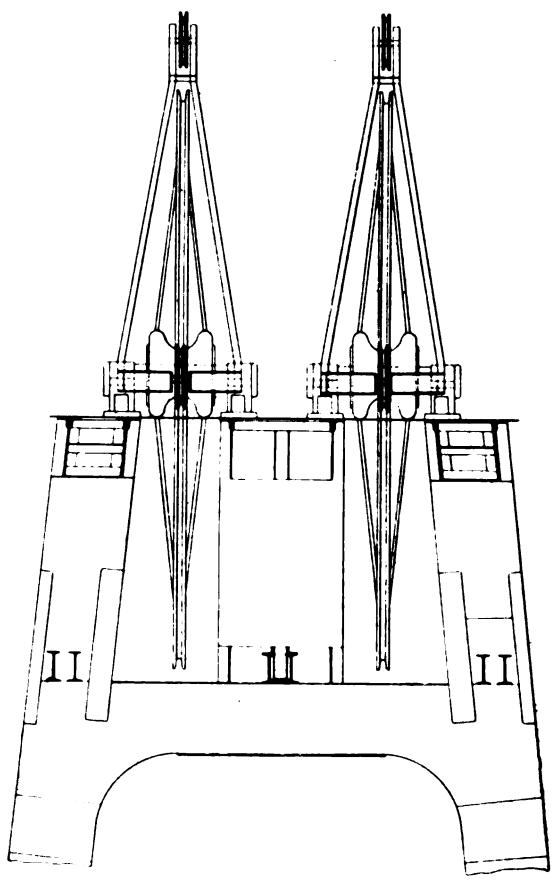

FIG. 294.—END VIEW OF ARRANGEMENT FOR CHANGING HEADGEAR PULLEYS.

as equal to the diameter of the rope. The spokes, however, vary from ·7D to D, and the number of spokes depends to a great extent upon the diameter and weight upon the pulley, and varies from 1·5 to 3 times the diameter in feet. The diameter of the boss varies from 2 to 2·5 times the diameter of the shaft, and the length

of the shaft journals should always be equal to two diameters. Table B (p. 124) gives the approximate sizes and weights of ordinary pulleys.

Headgears are sometimes fitted with a permanent derrick or lifting gallows for changing pulleys, but as this is seldom necessary, its usefulness can hardly justify the expense which it entails. The pulleys can always be got into position by means of a long swinging derrick secured in any position by guy ropes. The permanent derrick consists of two vertical uprights and a cross-beam, and the best way is to pivot the bottom ends of the uprights, so that the derrick may be brought directly over one or other of the pulleys. After the pulley is lifted out of its bearings, the derrick is swung so that the pulley overhangs the headgear, and in this position is lowered to the ground. The height of the cross-beam must be sufficient to give a clear lift of at least one and a-half times the diameter of the pulley.

A somewhat novel arrangement is shown in figs. 293 and 294, which is adopted at the Lothian Coal Company's Lady Victoria Pit. Here a large double triangle provided with pulleys is mounted or hinged to the bearings on each side of the pulley, and the position shown is that for raising or lowering a pulley from or to the ground, whilst the dotted lines show the position for lifting or lowering a pulley into its bearings. Fig. 293 is a side elevation of the arrangement, whilst fig. 294 is an end view looking towards the small pulley overhanging the headgear

CHAPTER V.

WINDING.

Of all operations in connection with colliery working, that of winding is the most important. Upon the winding machinery depends not only the output of the colliery, but in most cases is the only means by which the workmen enter and return from the mine, and consequently it requires the utmost care and attention in its design and upkeep. Daily examinations of the winding gear and shafts are enforced by law, and considering the seriousness of an accident when lowering or raising men, it is not too much to say that winding machinery should be designed and every precaution taken, to render accidents—so far as human foresight and intelligence can do so—absolutely impossible.

Winding engines may be vertical or horizontal, geared, or coupled direct to the drum; but the almost universal practice is to adopt the horizontal type of engine, a single engine being arranged on each side of the drum, and coupled direct with the cranks at right angles to each other. The dimensions of the engine depend upon (1) weight of coal to be raised; (2) depth of pit; (3) available steam pressure; and (4) time to be occupied in winding; and, as will be shown, it is better to raise a fairly heavy load slowly than a light load quickly, as with the latter a considerable portion of the engine power is required to impart the necessary acceleration to the moving masses with consequent worse efficiency in working.

Of recent years very great improvements have been effected in winding engines, by the adoption of higher steam pressures, automatic cut-off valve gear, and compounding, rendering them much more economical in steam consumption. But in all cases absolute reliability and freedom from breakdowns should always be the first consideration, as this is of much more importance than any question of economy, either in first cost or in working.

Ordinarily it is usual to wind both ropes on a single large drum, though abroad the general practice appears to be to employ separate drums, which are often arranged so that they may take up or let out extra rope as may be required for adjustment. The minimum diameter of the drum is determined by the size and flexibility of the rope; the more flexible the rope the less may be the diameter of

the drum, and consequently the proper method of proportioning the size of drum is in terms of the diameter of the wires of which the rope is composed, and if :—

$$D = \text{diameter of drum},$$
$$\delta = \text{diameter of wires},$$
$$D = 1{,}000 \text{ to } 1{,}500\ \delta \qquad (a)$$

It may, however, be more convenient for ordinary ropes to fix this dimension in terms of the diameter of the rope, in which case if

$$\rho = \text{diameter of the rope},$$
$$D = 120 \text{ to } 140\ \rho \qquad (b)$$

Where this would give a drum inconveniently large, a compound rope should be used, but in all cases it is advisable to have the drum as large as possible. One advantage in favour of the rope with a drum of large diameter is that a less number of turns are required, and consequently in the case of a cylindrical drum with round ropes there is decreased angular friction of the coils against each other, though on the other hand a large and heavy drum requires a large engine, and absorbs a certain amount of power in overcoming its inertia and imparting acceleration.

The diameter of the rope depends upon the load, which consists of that due to the weight of the rope hanging in the shaft, cage and chains, tubs and coal, friction of guides and pulleys, and acceleration of speed. If

W = Load in pounds due to rope, cage, chains, &c., tubs and coal,
V = Maximum velocity in feet per second,
T = Time in seconds in which to acquire velocity V,
g = Acceleration due to gravity = 32·2,
f = Co-efficient of friction, which may be taken as 0·02 for rope guides and 0·025 for wood or rail guides in a vertical shaft,
R = Total resistance or strain on the winding rope at the lift,

then

$$R = W + (Wf) + \frac{WV}{gT} \qquad (1)$$

and

$$RY = \text{Breaking strain of rope} \qquad (2)$$

where Y = the co-efficient of safety which may be taken as 8, though this varies between six and ten times the working load R. It is common practice, however, to take the co-efficient of safety as ten times the working load W—and often enough the weight due to the rope itself is left out of consideration—consequently, if the strain R be investigated, the actual co-efficient will be found, in many cases, to be very considerably less.

Ropes may be either round or flat, and of hemp or aloe fibre, or iron or steel wire. Flat ropes of hemp fibre are very little used in this country, though they

appear to be preferred in Belgium, and the north of France, to iron or steel ropes, and in deep pits they are of enormous dimensions—those in use at Anzin Colliery being 22½ in. in breadth, 3 in. thick, and weigh 18 tons each; they usually taper in breadth from the drum end. Flat ropes of iron or steel consist of a number of small round ropes sewn together, the requisite strength being attained in the number of small ropes. The objection to such ropes is their great weight, as compared with ordinary round steel ropes, of equal strength, and short life, and the only advantage that can possibly be claimed for flat ropes, is that the rope being arranged to coil upon itself, acts as a spiral drum, and by properly proportioning the drum and thickness of the rope a perfect counterbalance can be obtained; but this is seldom the case with iron wire ropes, and more often it is necessary to counterbalance them by other means, usually with chains, suspended in a staple.

Ordinary round ropes are composed of six strands; each of six wires laid over a single wire, the strands being laid over a hemp core, to form the rope. There are thus forty-two wires in the rope. When the twist or spiral of the strands and rope is in the same direction it is termed a "Lang's" lay, and when the strands and rope are twisted or "laid" in opposite directions is termed "ordinary" lay. The latter has not the same tendency to "spin," but does not wear so long as the former. Ropes containing more than seven wires in one strand are termed compound ropes, and vary somewhat as follows:—

								Wires in each strand.
8	wires	over	a	core	of	3 to 7	wires	= 11 to 15
10	„	„		„		„		= 13 to 17
12	„	„		„		„		= 15 to 19
15	„	9	wires	over	3	to 7	wires	= 27 to 31
18	„	12	„		7	„	=	37

and the flexibility of the rope increases with the number and smallness of the wires composing the strands. The breaking strain of the whole rope may be taken on an average as 20 per cent. less than the aggregate strength of the wires, due to the tension set up in twisting the wires together, and the strength of the wire depends upon the quality of the steel employed, the ultimate tensile strength of which varies from 45 to 125 tons per square inch, and may be raised to as much as 160 tons per square inch.

Considering the importance of the work depending upon the winding rope, it seems a pity that some standardisation has not been adopted. Manufacturers issue lists, some fairly complete, others very far from complete, and the breaking strains are usually given under such terms as "plough steel," "patent steel," "mild steel" and "iron," but the quality of the steel—as "plough steel," for instance—of one maker may be of very much higher tensile strength than another; and again, some makers give the aggregate breaking strength of the wires, as the breaking strength

TABLE I.—ROUND WIRE ROPES, ORDINARY CONSTRUCTION. APPROXIMATE BREAKING STRAINS.

Diameter of rope.	Circumference of rope.	Approximate weight per fathom.	Plough steel.					Patent steel.					Mild steel.	Iron.
			Tensile strength in tons per square inch of wire.											
In.	In.	Lb.	Tons. 125	Tons. 120	Tons. 115	Tons. 110	Tons. 105	Tons. 100	Tons. 95	Tons. 90	Tons. 85	Tons. 80	Tons. 50	Tons. 45	Tons. 35
5/16	1	1·0	4·1	3·9	3·7	3·6	3·4	3·2	3·1	2·9	2·7	2·6	1·6	1·4	1·1
3/8	1 1/8	1·2	5·3	5·1	4·9	4·7	4·5	4·3	4·0	3·8	3·6	3·4	2·1	1·9	1·5
29/64	1 1/4	1·5	6·5	6·2	5·9	5·7	5·4	5·1	4·9	4·6	4·3	4·1	2·5	2·3	1·8
7/16	1 3/8	1·8	8·0	7·7	7·4	7·0	6·7	6·4	6·1	5·8	5·4	5·1	3·2	2·9	2·2
15/32	1 1/2	2·1	9·4	9·0	8·6	8·2	7·9	7·5	7·1	6·7	6·4	6·0	3·7	3·3	2·6
33/64	1 5/8	2·5	10·9	10·4	10·0	9·6	9·1	8·7	8·2	7·8	7·4	6·9	4·3	3·9	3·0
35/64	1 3/4	2·9	12·9	12·3	11·8	11·3	10·8	10·3	9·8	9·2	8·7	8·2	5·1	4·6	3·6
19/32	1 7/8	3·3	14·6	14·0	13·4	12·8	12·2	11·6	11·1	10·5	9·9	9·3	5·8	5·2	4·0
41/64	2	3·8	16·9	16·2	15·5	14·8	14·1	13·5	12·8	12·1	11·5	10·8	6·7	6·0	4·7
43/64	2 1/8	4·3	19·5	18·4	17·6	16·8	16·1	15·3	14·5	13·8	13·0	12·2	7·6	6·9	5·3
45/64	2 1/4	4·8	21·4	20·5	19·7	18·8	18·0	17·1	16·3	15·4	14·5	13·7	8·5	7·7	6 0
3/4	2 3/8	5·3	24·2	23·3	22·3	21·3	20·8	19·4	18·4	17·4	16·5	15·5	9·7	8·7	6·7
25/32	2 1/2	5·9	26·5	25·5	24·4	23·3	22·3	21·2	20·2	19·1	18·0	17·0	10·6	9·5	7·4
53/64	2 5/8	6·6	29·0	27·8	26·7	25·5	24·3	23·2	22·0	20·9	19·7	18·5	11·6	10·4	8·1
27/32	2 3/4	7·1	32·2	30·9	29·6	28·3	27·1	25·8	24·5	23·2	21·9	20·6	12·9	11·6	9·0
29/32	2 7/8	7·8	34·8	33·5	32·0	30·7	29·3	27·9	26·5	25·1	23·7	22·3	13·9	12·5	9·7
61/64	3	8·5	37·6	36·1	34·6	33·1	31·6	29·6	28·6	27·0	25·6	24·0	15·0	13·5	10·5
1	3 1/8	9·2	41·3	39·6	38·0	36·3	34·7	33·1	31·4	29·6	28·1	26·4	16·5	14·8	11·5
1 1/32	3 1/4	9·9	44·4	42·6	40·8	39 1	37·2	35·5	33·7	31·9	30·2	28·4	17·7	15·9	12·4
1 5/64	3 3/8	10·7	47·5	45·5	43·8	41·8	39·8	38·0	36·1	34·1	32·3	30·3	19·0	17·0	13·2
1 7/64	3 1/2	11·5	52·4	49·5	47·5	45·4	43·3	41·3	39·2	37·1	35·1	33·0	20·6	18·5	14·4
1 9/32	3 5/8	12·3	54·6	52·7	50·6	48·4	46·1	44·0	41·9	39·6	37·4	35·1	22·0	19·8	15·3
1 11/64	3 3/4	13·2	59·4	57·0	54·2	52·2	49·8	47·5	45·1	42·7	40·3	38·0	23·7	21·3	16·6
1 13/64	3 7/8	14·1	63·0	60·5	57·9	55·0	52·8	50·4	47·8	45·8	42·8	40·4	25·2	22·6	17·6
1 9/32	4	15·0	67·7	65·0	62·2	59·6	56·9	54·1	51·4	48·7	46·0	43·3	27·0	24·3	18·9
1 19/64	4 1/8	16·0	71·6	68·7	65·8	62·9	60·0	57·2	54·3	51·5	48·6	45·9	28·1	25·7	20·0
1 5/16	4 1/4	17·0	75·5	72·5	69·5	67·3	63·5	60·4	57·4	54·4	51·4	48·3	30·2	27·2	21·1
1 21/64	4 3/8	18·0	80·6	77·4	73·4	69·1	67·7	64·5	61·2	59·4	54·8	51·6	32·2	29·7	22·5
1 23/32	4 1/2	19·0	84·8	81·4	78·0	74·6	71·2	67·8	64·4	61·1	57·7	54·3	33·9	30·5	23·7
1 25/64	4 5/8	20·1	90·3	86·8	83·1	79·4	75·0	72·2	68·6	65·0	61·4	57·8	36·1	32·5	25·3
1 27/64	4 3/4	21·2	94·8	90·9	87·2	83·4	79·6	75·8	72·0	68·2	64·5	60·7	37·9	34·1	26·5
1 29/64	4 7/8	22·4	99·3	95·3	91·4	87·4	83·5	79·7	75·0	71·5	67·5	63·5	39·7	35·7	27·8
1 15/32	5	23·5	104·0	99·8	95·6	91·5	87·3	83·2	79·0	74·9	70·2	66·5	41·6	37·4	29·1
1 1/2	5 1/8	24·8	109·9	105·5	101·1	96·8	92·3	88·0	83·6	79·2	74·8	70·4	44·0	39·5	30·7
1 17/32	5 1/4	26·0	114·9	110·3	105·7	101·1	96·5	91·9	87·3	82 7	78·1	73·5	45·9	41·3	32·1
1 35/64	5 3/8	27·3	121·0	116·2	111·3	106·5	101·7	96·8	92·0	87·3	82·4	77·6	48·4	43·6	33·9
1 9/16	5 1/2	28·5	127·7	122·7	117·5	112·3	107·2	102·1	97·0	91·9	86·8	81·2	51·0	45·9	35·7
1 37/64	5 5/8	29·8	133·0	127·7	122·3	117·0	111·7	106·2	101·0	95·7	90·4	85·1	53·2	47·9	37·2
1 39/64	5 3/4	31·1	138·3	132·8	127·3	121·7	116·2	110·6	104·7	99·6	94·0	88·5	57·1	49·8	38·7
1 41/64	5 7/8	32·6	143·9	138·1	131·9	126·6	120·8	113·4	109·3	103·6	97·4	92·0	56·2	51·8	40·2
1 21/32	6	34·0	151·2	144·8	138·7	132·7	127·7	120·6	114·6	108·6	102·5	96·5	60·3	54·3	42·2

of the rope; which is not the case, the latter varying from 10 to 30 per cent. less than the former. It would appear, then, that such terms as "plough steel," &c., should be made obsolete, and the rope listed as manufactured from steel with a certain tensile strength of so many tons per square inch, depending upon the quality of the steel used, and the ultimate strength of the rope should be given, which will be somewhat *less* than the total ultimate strength of the wires.

It would certainly be most valuable if a series of experiments with ropes of different constructions, manufactured from different qualities of steel and iron, could be carried out and tabulated. So far there appears to be no reliable data obtainable as to the comparative weight, strength, "and flexibility" of different types of ropes. Another question of importance is that of socketing or capping, and the prevention of internal corrosion, which might with advantage be also investigated.

The ropes ordinarily in use are the "Lang's lay," "lock coil," and "flattened strand" types, it being claimed for the lock-coil rope that it is of less weight than

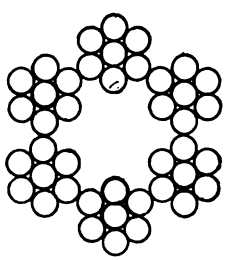

FIG. 295.

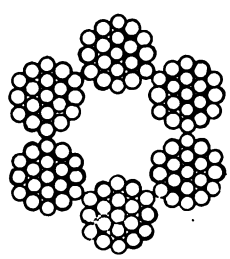

FIG. 296.

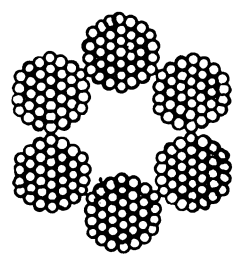

FIG. 297.

SECTIONS OF ORDINARY ROPES.

an ordinary rope of equal strength, but if there is anything at all in the claim it is very slight. They have, however, other advantages, such as a smooth surface, thereby reducing the wear and friction, greater flexibility, and do not twist in working. The last point is of very great advantage in sinking pits, and where the cages work in rope guides. Figs. 295, 296 and 297 show sections of ordinary and compound ropes, and Table I. gives the approximate breaking strains of ropes of ordinary construction for different qualities of steel manufactured by Messrs. Dixon and Corbitt, and R. S. Newall and Co. Limited.

Lang's lay ropes may be twisted either right-handed or left-handed, and they should be made according to the direction they coil on the drum, *i.e.*, if, when standing behind the drum and looking towards the pulleys, the rope coils from right to left, it should be laid left-handed, and *vice versâ*.

Lock coil ropes were first invented and introduced by Messrs. Latch and Batchelor, and consist of several layers or sheaths of wires laid over a wire core in opposite directions, the outer sheath being of a special shape, so that they interlock with each other, as shown in figs. 298, 299 and 300, which are sections of these ropes as manufactured by them; whilst Table II. gives particulars of this class of rope, as manufactured by Messrs. George Elliot and Co. Limited, who are also manufacturers of ordinary and Lang's lay ropes.

TABLE II.—LOCK COIL WIRE ROPES.—APPROXIMATE BREAKING STRAINS.

Diameter of rope.	Circumference of rope.	Approximate weight per fathom.	Plough steel (110 tons per square inch).	Patent steel (85 tons per square inch).	Diameter of rope.	Circumference of rope.	Approximate weight per fathom.	Plough steel (110 tons per square inch).	Patent steel (85 tons per square inch).
In.	In.	Lb.	Tons.	Tons.	In.	In.	Lb.	Tons.	Tons.
$\frac{1}{4}$	2	6	26	19½	$1\frac{5}{32}$	4½	30	126	100
$\frac{3}{8}$	2½	7	28	22	$1\frac{3}{16}$	4¾	34	140	105
$\frac{33}{32}$	2¼	7½	32	25	$1\frac{19}{32}$	5	38	155	115
$\frac{7}{16}$	2⅜	8	35	27	$1\frac{13}{16}$	5¼	41	171	127
$\frac{35}{32}$	2½	9	40	28½	$1\frac{7}{8}$	5½	45	188	140
$\frac{9}{16}$	2⅝	10	43	32	$1\frac{33}{16}$	5¾	49	205	152
$\frac{1}{2}$	2¾	11	47	38	$1\frac{29}{32}$	6	52	224	166
$\frac{37}{32}$	2⅞	12½	51	42	$1\frac{15}{16}$	6¼	59	245	182
$\frac{9}{16}$	3	14	58	45	$2\frac{1}{16}$	6½	62	262	195
$1\frac{1}{32}$	3¼	16½	70	43	$2\frac{1}{16}$	6¾	65	283	210
$1\frac{7}{16}$	3½	18	80	60	$2\frac{7}{32}$	7	74	304	226
$1\frac{13}{16}$	3¾	21	87	70	$2\frac{1}{16}$	7¼	84	327	243
$1\frac{9}{32}$	4	24	99	73	$2\frac{1}{8}$	7½	93	352	262
$1\frac{5}{16}$	4¼	26	112	85					

Lock coil ropes, whilst stronger, are very much heavier than ordinary ropes as compared with their diameters; thus, a 4 in. circumference ordinary rope will weigh about 15 lb. per fathom, which—taking wire at 110 tons per square inch—will have a breaking strain of 59 tons, whilst a lock coil rope of the same dimensions will weigh about 24 lb. per fathom, but will have a breaking strain of 99 tons, or nearly double, and would be about equal to a $5\frac{1}{8}$ in. circumference ordinary rope weighing about the same. Generally speaking, some of the advantages that are claimed for lock coil ropes are a smaller diameter as compared with ordinary ropes of the same breaking strain, their smooth surface, and that they do not twist in working; further, that when properly constructed they are freer from corrosion than any other form of rope. Professor Galloway states in his *Lectures on Mining*, that the first pair of lock coil winding ropes which he adopted at Llanbradach Colliery

FIG. 298.

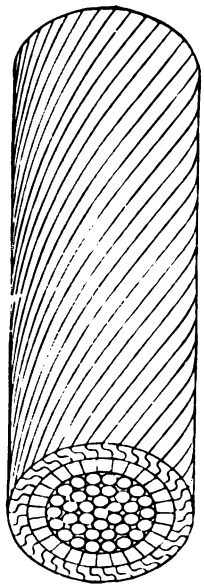

FIG. 300.

LOCK COIL.

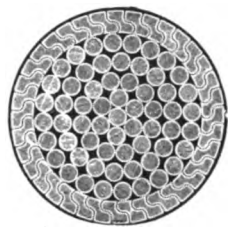

FIG. 299.

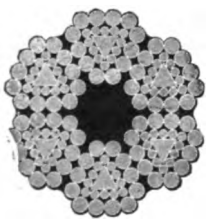

FIG. 301.

FIG. 303.

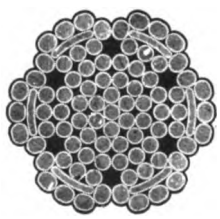

FIG. 305.

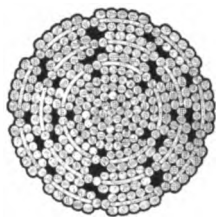

FIG. 308.

FIG. 302.

FIG. 304.

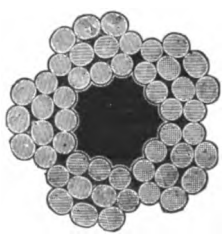

FIG. 306.

FIG. 309.

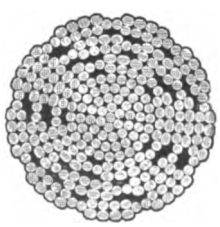

FIG. 307.

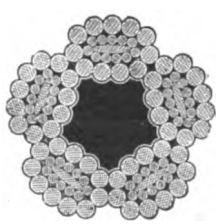

FIG. 310.

FLATTENED STRAND.

TABLE III.—FLATTENED STRAND WIRE ROPES. APPROXIMATE BREAKING STRAINS.

Diameter of rope.	Circumference of rope.	Approximate weight of rope.	Breaking strain in tons.					Diameter of rope.	Circumference of rope.	Approximate weight of rope.	Breaking strain in tons.				
			Special plough steel, 120 tons per sq. in.	Best plough steel, 110 tons per sq. in.	Special patent steel, 100 tons per sq. in.	Best patent steel, 90 tons per sq. in.	Special Bessemer steel, 45 tons per sq. in.				Special plough steel, 120 tons per sq. in.	Best plough steel, 110 tons per sq. in.	Special patent steel, 100 tons per sq. in.	Best patent steel, 90 tons per sq. in.	Special Bessemer steel, 45 tons per sq. in.
In.	In.	Lb.	Tons.	Tons.	Tons.	Tons.	Tons.	In.	In.	Lb.	Tons.	Tons.	Tons.	Tons.	Tons.
5/16	1	1·29	5·51	4·74	3·94	3·71	2·02	1 3/4	3 1/2	15·75	78·52	67·27	56·14	53·32	28·58
3/8	1 1/8	1·39	6·75	5·85	4·84	4·61	2·47	1 13/16	3 5/8	16·80	84·30	72·40	60·00	57·00	31·00
25/64	1 1/4	1·72	8·66	7·31	6·06	5·85	3·15	1 7/8	4	18·00	89·44	76·61	63·90	60·64	32·51
7/16	1 3/8	2·09	10·57	9·00	7·54	7·08	3·72	1 15/16	4 1/8	19·25	95·20	81·70	67·50	64·20	35·00
29/64	1 1/2	2·48	12·25	10·57	8·77	8·32	4·37	2	4 1/4	20·25	102·15	87·52	72·90	69·20	37·12
33/64	1 5/8	2·91	14·74	12·71	10·57	10·01	5·29	2 1/16	4 3/8	21·30	107·00	91·90	77·00	73·00	39·00
35/64	1 3/4	3·38	16·88	14·40	12·04	11·36	6·06	2 1/8	4 1/2	22·50	114·40	98·00	81·68	77·62	41·62
19/32	1 7/8	3·93	18·91	16·31	13·61	12·94	6·87	2 3/16	4 5/8	23·60	119·50	102·70	85·60	79·30	44·00
41/64	2	5·06	22·61	19·35	16·10	15·30	8·21	2 1/4	4 3/4	24·99	127·00	108·90	90·79	86·18	46·24
43/64	2 1/8	5·34	25·10	21·50	17·88	17·00	9·11	2 5/16	4 7/8	26·25	134·50	115·30	96·20	91·60	49·00
23/32	2 1/4	5·90	28·57	24·52	20·36	19·35	10·35	2 3/8	5	28·12	140·74	120·60	100·46	95·40	51·19
3/4	2 3/8	6·47	31·39	27·45	22·39	20·70	11·37	2 7/16	5 1/8	29·30	146·90	126·00	105·00	100·40	53·50
25/32	2 1/2	7·31	34·40	29·48	24·50	23·30	12·50	2 1/2	5 1/4	30·51	155·14	132·97	110·70	105·20	56·48
53/64	2 5/8	8·20	38·40	33·00	27·00	25·90	14·00	2 9/16	5 3/8	32·00	160·00	138·50	115·50	109·70	58·80
7/8	2 3/4	8·74	42·41	36·34	30·27	28·80	15·64	2 5/8	5 1/2	33·48	171·80	147·15	122·60	116·55	62·55
29/32	2 7/8	9·25	47·00	40·00	33·20	31·75	17·00	2 11/16	5 5/8	35·00	178·50	154·00	127·60	121·20	65·00
61/64	3	9·95	50·40	43·20	36·00	34·20	18·34	2 3/4	5 3/4	36·60	185·51	159·08	132·55	125·89	67·61
1	3 1/8	11·25	54·25	46·50	38·60	36·70	19·70	2 13/16	5 7/8	38·20	194·70	166·80	138·90	132·00	71·00
1 1/32	3 1/4	11·91	59·30	51·30	42·30	40·16	21·60	2 7/8	6	40·50	202·05	173·14	144·34	137·02	73·58
1 1/16	3 3/8	13·00	64·20	54·90	45·80	43·00	23·00	2 15/16	6 1/8	41·60	213·30	182·80	152·30	144·70	77·00
1 3/64	3 1/2	14·06	68·40	58·60	48·84	46·47	23·74	3	6 1/4	43·87	220·84	189·34	157·72	149·85	80·44
1 1/32	3 5/8	14·80	73·75	63·50	53·30	50·00	27·00	3 1/16	6 3/8	44·90	228·60	196·00	163·20	155·10	83·20

lasted for seven years, and raised over 300,000 tons of coal each; but it is only fair to add that he says: "I attribute this high efficiency partly to the use of these various contrivances—(Stauss's patent keps and adjusting screws)—and partly to the distance of the drum from the shaft (115 ft.)." Against the advantages previously mentioned there is a rather serious disadvantage inasmuch as the wires, being "locked," do not splay out when broken, and, consequently, are not so easily detected. There is, however, the fact that, even though a wire in the lock coil may be broken it is still a useful part of the rope, provided it is not broken near the socket end, as the frictional resistance, which is considerable, will prevent it being drawn from the rope. Again, the wires composing the sheaths, which are laid in opposite directions, can slide one within the other longitudinally, and it is quite possible that—if carelessly capped—the strain may come upon the various sheaths very unequally; and, moreover, the inner wires cannot be so well lubricated when in use. It is important, therefore, to see that the rope is properly filled with grease during its manufacture.

FIG. 311.
ORDINARY.

A different type of rope is the "flattened strand" rope, manufactured by Messrs. Latch and Batchelor Limited, sections of which are shown in figs. 301 to 310, and which appears to be the most satisfactory solution of the difficulty to obtain a rope at once flexible; smooth, and having a large wearing surface. Their smooth appearance may be compared with the ordinary Lang's lay rope, which is shown in fig. 311. In these ropes the strands are flattened by adopting a triangular, flat, or oval-shaped core, in place of a circular one. The strands are laid on the Lang's lay principle, and the rope much more nearly approaches the circular form than those of ordinary construction. They are exceedingly flexible, and as a more even surface is exposed for wear, there is less liability to any crushing effect, and they are non-spinning. Table III. gives the approximate weights and breaking strains of these ropes.

This table applies to flattened strand ropes made with six strands, as per figs. 301 and 309; ropes with five strands. as per figs. 303, 306 and 310, and "Lang's lay" or "ordinary" ropes, as manufactured by Messrs. Latch and Batchelor Limited, are 12½ per cent. *less* in both weight and strength.

In selecting a winding rope for any given work, it is not always possible or even advisable to fix a high factor of safety. Usually 10 is the factor adopted, but where this would necessitate a rope made from wires drawn to a high breaking strain, better results would in all likelihood be obtained by adopting a lower

factor of safety. The higher the breaking strain the harder becomes the steel, and, further, the wires composing the rope tend to harden in work, consequently a rope of hard steel wires with a high initial breaking strain may fail through the wires becoming brittle and breaking. With deep pits it is difficult to obtain such a high factor of safety as 10, but as the loads, though probably heavier than would be the case in a shallow pit, are dealt with in a longer time, they are not subject to the same number of shocks as is the case when winding quickly from a shallow pit. It is the shocks due to suddenly picking up the load that kill the ropes, and where keps are in use and the cage has to be lowered on and lifted off, with probably a few inches of slack rope each time the tubs are changed, thereby putting strains upon it far beyond the working load, it is no wonder that ropes suddenly fail. To show the serious effect of a few inches of slack chain, Messrs. Latch and Batchelor give the following series of tests which show the extra strain on the rope, carefully ascertained by a dynamometer:—

	Strain in pounds.
No. 1 test:—	
Empty cage lifted gently	4,030
„ „ with 2½ in. slack chain	5,600
„ „ „ 6 „	8,950
„ „ „ 12 „	12,300
No. 2 test:—	
Cage and four empty tubs weighed by machine	6,375
Cage lifted gently	6,725
„ with 3 in. slack chain	11,200
„ 6 „	12,250
„ 12 „	15,675
No. 3 test:—	
Cage and full tubs weighed by machine	11,300
Cage lifted gently (1)	11,300
„ „ (2)	11,525
Cage with 3 in. slack chain (1)	19,025
„ 3 in. „ (2)	19,025
„ 6 in. „ (1)	23,500
„ 6 in. „ (2)	25,750
„ 9 in. „ (1)	27,950
„ 9 in. „ (2)	25,750

The differences shown in the last series are due to the cage being lifted at different rates, and it will be seen that with 6 in. of slack chain an extra strain amounting to the same as with 9 in. can easily be produced. Even where a careful engineman never works with slack chains there is still the extra strain due to acceleration, which may be considerable in amount, and certainly should always be allowed for. Further, where the drums and pulleys are small, the bending stresses produced in the rope may have much more serious effects than that due to the load and shocks, especially with hard steel wire, and consequently it would appear that if a high factor of safety is required, this should be obtained by increasing the size of rope rather than by drawing the wires to a higher breaking strain. For

PLATE XVI.—(*To*

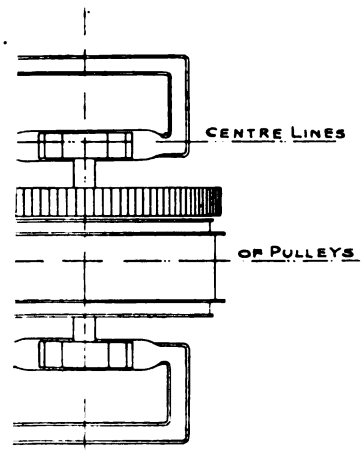

O OVER-ROPES.

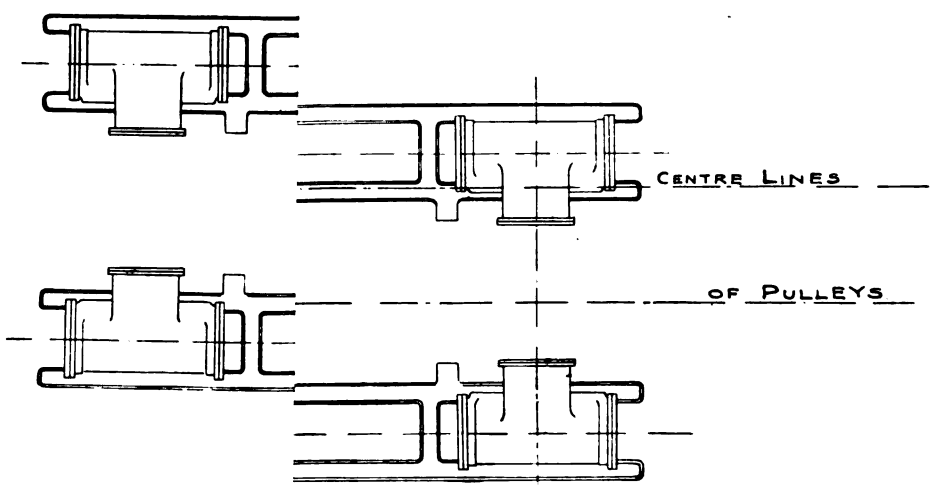

R TWO OVER-ROPES.

winding ropes probably the limit should be fixed at 110 tons per square inch breaking strain, to which the wire should be drawn. Again, the distance of the drum from the pulleys greatly influences the wear and tear on the ropes by increasing the bending stresses and angular friction if the distance be short, and *vice versâ*. Usually it is the under rope that suffers most, as this rope has to bend in opposite directions, and one suggestion to overcome this difficulty is shown in fig. 312, where two drums on separate shafts are geared together, one being placed in advance of the other. This arrangement also materially reduces the angular friction, but the objection to it is the gearing, which in large engines would require to be very heavy in order to transmit the power to the drum. By placing two engines to each drum, however, as shown in fig. 313, and arranging them to work in opposite directions, the weight and strength of the wheels may be considerably reduced, as they would have only to transmit one-half the lifting power or torque of the engine, and that due to acceleration of the load, and the wheels being fairly large in diameter, the pressure upon the teeth would be inconsiderable, and the noise could be reduced to a minimum by employing raw hide teeth upon one wheel. The engines would be half the size of those necessary if two only are employed, and is specially adapted for compounding, with more economy in steam consumption, and whilst the first cost would be somewhat greater, for the reasons stated above, in the long run the expense may be justified. To save space the engines could be arranged diagonally or vertical.

In order to entirely avoid friction, the late Mr. W. Morgans designed for the Dolcoath Mine a winding engine, mounted upon rails, which at each revolution of the drum moved sideways a distance equal to the thickness of the rope, thus keeping the rope always in line with the pulley. This arrangement has the advantage of reducing the width of drum required as the rope coiling on may take the place of that paying off, which cannot very well be obtained in an ordinary fixed drum.

Though the cost of a single winding rope may not be great, yet over a number of years the total cost may be very considerable, depending upon the life of the ropes, and consequently the adoption of any means which tend to increase the life of the ropes, even though entailing an increased first outlay, will result in a saving in the long run.

The working load of the rope, then, may be determined from (1), and the breaking strain from (2), and a suitable rope, either ordinary, lock coil or flattened strand, selected from a manufacturers' list, from which the diameter of the drum can be found by either (*a*) or (*b*). Considering the case of a single cage or an unbalanced kibble in a sinking pit, the engine would not only require to be sufficiently powerful to overcome the resistance R, but that due to the inertia and

friction of the engine itself. The efficiency of a winding engine is variously taken as 70 to 80 per cent., and assuming the former quantity, the maximum horse-power of the engine may at once be determined from

$$\text{Indicated horse-power} = \frac{R \times V \times 100}{550 \times 70} \qquad (3)$$

With two cages, however, though there will be the same strain R on the winding rope, the load on the lowering rope consisting of the cage, chains, &c., and empty tubs will assist the engine, and consequently the actual load to be raised will be that due to the weight of unbalanced rope and coal; and in order to further reduce the load to that of the coal only, the rope may be counterbalanced.

Considering, first, a winding engine without a counterbalanced rope, there will be the weight of the rope and coal acting on the periphery of the drum, and the steam pressure acting through the piston, connecting rod and crank on the crank shaft of the drum, and if

W = Unbalanced load in pounds,
D = Diameter of drum in feet,
P = Steam pressure in pounds per square inch,
A = Area of cylinder in square inches,
L = Length of stroke in feet,
d = Diameter of cylinder in inches,

then the moment of the load acting on an arm equal to the radius of the drum will be

$$M = W \times \frac{D}{2}$$

and the moment of the engine acting on an arm equal to the radius of the crank will be

$$M = P \times A \times \frac{L}{2}$$

and expressing these as an equation

$$W \times \frac{D}{2} = P \times A \times \frac{L}{2} \qquad (4)$$

This, however, does not allow for power to overcome the inertia, friction and acceleration, consequently the engine would not start, and it is therefore necessary to introduce other quantities. If

G = Total friction in pounds,
f = Co-efficient of friction, say 0·02 for rope guides and 0·025 for rail or wood guides,*
w = Weight of cage, &c., and tubs,
e = Efficiency of engine.

* This is a quantity not easily determined, as, obviously, it is affected by the condition of the guides, lubrication, &c., and the figures given are only very approximate. Moreover, the friction of the guides will not be effected by the load, but it is assumed that the co-efficient f will cover the friction of the pulley bearings, which, of course, will vary with the load.

As there are two cages,

$$G = (W + 2w)f,$$

and introducing these into equation (4), gives :—

$$(W + G)\frac{D}{2} = P \times A \times \frac{L}{2} \times e \qquad (5)$$

In the case of a geared engine the mechanical advantage is increased directly as the number of revolutions it makes to one revolution of the drum, and if

$$n = \text{ratio of gearing} = \frac{\text{diameter of spur wheel}}{\text{diameter of pinion,}}$$

introducing this into the foregoing equation gives

$$(W + G) \times \frac{D}{2} = P \times A \times \frac{L}{2} \times e \times n \qquad (6)$$

If the engines are direct coupled, n becomes 1, and if there is only one cage

$$G = (W + w)f.$$

Equation (6) may be written

$$(W + G) \times D = P \times A \times L \times e \times n \qquad (7)$$

from which

$$A = \frac{(W + G) \times D}{P \times L \times e \times n} \qquad (8)$$

and

$$d = \sqrt{\frac{A}{\cdot 7854.}} \qquad (9)$$

The length of stroke L must be assumed for a trial solution, unless the ratio of piston diameter to stroke be fixed upon first when L may be expressed in terms of the diameter. Since

$$A = d^2 \times \cdot 7854 \qquad (10)$$

and

$$L = \frac{r\,d}{12} \qquad (11)$$

where r = ratio length of stroke to piston diameter.

Equation (7) may be written

$$(W + G) \times D = P \times d^2 \times \cdot 7854 \times \frac{r\,d}{12} \times e \times n \qquad (12)$$

from which

$$d = \sqrt[3]{\frac{(W + G) \times D}{P \times \cdot 7854 \times \frac{r}{12} \times e \times n}} \qquad (13)$$

A good proportion for the length of the stroke is twice the diameter of cylinder, though this varies from one and a-half to two and a-half times. Taking the former, r becomes 2 and

$$d = \sqrt[3]{\frac{(W + G) \times D}{P \times 0{\cdot}1309 \times e \times n}} \qquad (14)$$

This then gives the size of cylinder necessary to start the load; as the engines are coupled at right angles, only one engine will be available for this purpose, as the other may be on the dead centre, consequently d will be the diameter of each cylinder. There is still, however, the question of speed and momentum to be

considered, as although the cylinders may be large enough to start, they may not be sufficiently so to develop the required speed.

It is evident that the maximum power to be given out by the engines will be during the period of acceleration, when the whole of the moving masses, consisting of the cages, coal, tubs, ropes, &c., in the shaft, and the drum of the engine—which latter often seriously affects the size of engines required—has to be set in motion, and to acquire from rest, in a few seconds, a high velocity. Consequently, the dimensions of the cylinders of the engines should be designed to correspond or be equal to the work done during this period. After the engine once gets into motion the effective steam pressure becomes reduced owing to wire-drawing friction and back pressure, and more especially when the steam pipes and ports are small. When the piston is at rest, or moving very slowly, the steam pressure will more nearly approach the boiler pressure. Once the engine gets into motion, however, the effective pressure gradually falls as the engine gains speed, as is shown in fig. 314 which is an indicator diagram taken from a winding engine when under

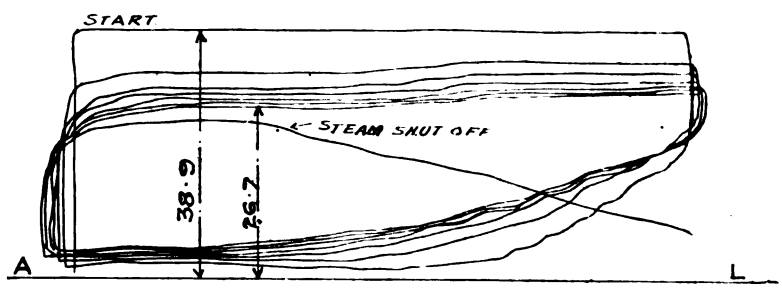

Fig. 314.

steam during a wind. At starting the pressure rises to nearly the full gauge pressure of 40 lb. per square inch, but at the end of the seventh revolution it has fallen to 26·7 lb., or two-thirds of the gauge pressure. The back pressure is due almost entirely to the smallness of the exhaust valves and pipes.

At the commencement of a wind, then, the work to be done by the engine will be that due to

1. Lifting the unbalanced load against gravity and overcoming friction.
2. Imparting acceleration to the whole of the moving masses, from rest to a maximum speed.

At the end of the acceleration period the steam may be further reduced by a quick cut-off and worked expansively in the cylinder, during the maximum speed period, and at the end of this period the steam is shut off altogether and retardation begins, when the whole of the moving masses are brought to rest.

Knowing the weight to be raised and the time to be occupied, and the depth of the shaft, most of the data are at hand. The boiler steam pressure will be fixed, and the minimum diameter of the drum determined from the size of the rope, though this will also be influenced somewhat by the question of piston speed. The average piston speed of winding engines may be taken as 500 ft. per minute, though in practice this varies from 200 ft. for small engines to 700 or 800 feet for large engines fitted with high-class Corliss valve-gear; there seems to be no real reason why the piston speed of small engines should be kept so low, or why the limit of piston speed should be 800 ft. per minute. Small engines are usually fitted with the ordinary slide-valve, but large engines should always be fitted with Cornish or Corliss valves.

To determine the size of cylinders necessary to raise the load at a given maximum speed in feet per second, it will be necessary to take into account the force required for acceleration, and if

C = Total work in foot-pounds required for acceleration,
S = Space moved over in feet during acceleration period,
T = Time occupied during acceleration period in seconds,
m = Number of revolutions of the drum,

Then the work in foot-pounds during this period will be

$$F\,P = C + (W + G) \times S \tag{15}$$

and the work done by the engines will be

$$F\,P = 4 \times P \times d^2 \times \cdot 7854 \times \frac{r\,d}{12} \times N \times e \times n \tag{16}$$

and as there are two engines the work done by each engine will be half this amount. Where the engines are coupled direct to the drum, n becomes 1. Consequently expressing (15) and (16) as an equation,

$$C + (W + G) \times S = 4 \times P \times d^2 \times \cdot 7854 \times \frac{r\,d}{12} \times m \times n \times e; \tag{17}$$

from which

$$d = \sqrt[3]{\frac{C + [(W + G) \times S]}{4 \times P \times \cdot 7854 \times \frac{r}{12} \times m \times n \times e.}} \tag{18}$$

The total work C will require to be separately obtained for the drum and pulleys, and for the weight moving in the shaft. The weight of the drum and pulleys will act at the outer end of the radius of gyration, and for all practical purposes the radius from the centre of gyration may be taken as

$$y = Q \sqrt{\frac{1}{2}}. \tag{19}$$

where

y = Radius of gyration.
Q = Radius of drum,

and the pulleys may be considered as part of the drum.

If

V = Maximum velocity of the cages in feet per second,

v = Maximum velocity at end of radius of gyration in feet per second,

K = Weight of the drum and pulleys in pounds,

a = Acceleration in feet per second per second $= \frac{V}{T}$

$W + 2w$ = Total weight of coal, cages and tubs in pounds (when there are two cages).

q = Total weight of ropes in pounds.

E = Work in foot-pounds required to give acceleration to $W + 2w + q$.

F = Work in foot-pounds required to give acceleration K.

Then

$$v = \frac{y \times V}{Q} \tag{20}$$

$$E = \frac{(W + 2w + q) \times V \times S}{32{\cdot}2 \times T} = \frac{(W + 2w + q) \times V^2}{64{\cdot}4} \tag{21}$$

$$F = \frac{K \times v \times S}{32{\cdot}2 \times T} = \frac{K \times v^2}{64{\cdot}4} \tag{22}$$

$$S = \frac{1}{2} V T = \frac{1}{2} a T^2 \tag{23}$$

$$\text{and } C = E + F \tag{24}$$

The piston speed will depend upon the number of revolutions N of the drum and N again will depend upon its diameter.

N revolutions per minute will be

$$N = \frac{V}{\pi D} \times 60 = 2 \frac{m}{T} \times 60, \text{ or } = 120 \frac{m}{T}. \tag{25}$$

and as there are two strokes of the engine to each revolution of the drum,

$$\text{Piston speed} = 2 \times L \times N = 240 \times L \times \frac{m}{T}, \tag{26}$$

or if the engine is geared

$$N = \frac{V \times 60}{\pi \times D} \times n = 120 \frac{m}{T} \times n, \tag{27}$$

and

$$\text{Piston speed} = 2 \times L \times N \times n, = 240 \times L \times \frac{m}{T} \times n, \tag{28}$$

which will be the maximum piston speed.

The maximum brake horse-power required to raise the load will be

$$\text{B.H.P.} = \frac{C + (W + G) \times S}{275 \times T},$$

and the maximum indicated horse-power developed by the engines will be

$$\text{I.H.P.} = \frac{4 \times P \times L \times A \times m}{275 \times T},$$

or, taking the piston speed in feet per minute,

$$\text{I.H.P.} = \frac{2 \times P \times A \times 240 \times L \times m \times n}{33{,}000 \times T}.$$

The mechanical efficiency will be

$$e = \frac{C + (W + G) \times S}{4 \times P \times L \times A \times m \times n} = \frac{\text{B.H.P.}}{\text{I.H.P.}}$$

The useful work done by the engine will be that of raising the weight of coal, the depth of the shaft, and the total work done by the engine will be that required for acceleration and raising the load to the end of the maximum speed period. Hence the useful work in foot-pounds will be

Useful work = weight of coal × depth of pit, and the total work done by the engine.

Indicated work = $4 \times P \times L \times A \times Z$,

where Z = the actual number of revolutions made when under steam, and P = the mean effective steam pressure. The ratio of useful work to indicated work then will be

$$\text{Ratio} = \frac{\text{Weight of coal} \times \text{depth of pit}}{4 \times P \times L \times A \times Z}$$

As the mean effective steam pressure acting upon the piston will vary during the different periods, it will be necessary to compute this quantity from indicator diagrams preferably taken for each stroke of the engine.

The use of the formulæ may best be illustrated by taking an example. Suppose it is desired to find the size of (*a*) a pair of geared winding engines for a sinking pit 100 fathoms deep, and (*b*) the size of a pair of direct-acting winding engines to wind 2,000 tons of coal from a depth of 250 fathoms in eight hours—the boiler steam pressure for (*a*) to be taken as 100 lb. per square inch and for (*b*) as 140 lb. per square inch.

(*a*) In this case the following data will be assumed :—

Weight of kibble, 10 cwt.
Weight of *débris*, 20 cwt.
Engine geared 2½ to 1, or

$$\frac{\text{Diameter of spur wheel}}{\text{Diameter of pinion wheel}} = 2\tfrac{1}{2}$$

Maximum velocity, 20 ft. per second.
Time in which to attain V, 20 seconds.
Kibble to run in rope guides.

It will be first necessary to determine the size of rope and drum. Allowing a factor of safety of 12 on the working load of 30 cwt., gives as the breaking strain of the rope,

$$\frac{12 \times 30}{20} = 18 \text{ tons},$$

and a 2 in. circumference lock coil rope weighing 6 lb. per fathom, or a 2¼ in. flattened strand rope weighing about the same of wire drawn to 85 and 90 tons per square inch respectively will be found suitable. Taking the diameter of the lock coil rope as 0·64 in., then from (*b*)

$$D = \frac{120 \times 0{\cdot}64}{12} = 6{\cdot}4 \text{ ft.}$$

or, say, 7 ft. diameter of drum, which will also be suitable for a flattened strand rope of rather larger diameter.

The maximum strain upon the rope will be determined from (1), the maximum velocity being 20 ft. per second, and the time in which to attain this speed 20 seconds.

The load will be as follows :—

	Lb.
Kibble	1,120
Débris	2,240
Rope	600
Total	3,960

and

$$R = 3{,}960 + (3{,}960 \times 0{\cdot}02) + \frac{3{,}960 \times 20}{32{\cdot}2 \times 20} =$$

4,162 lb., or 1·86 tons,

which at once reduces the factor of safety of the rope chosen to about 10.

The size of cylinder may be determined from (8), but it will be necessary to fix the length of stroke L for a trial calculation, and e may be taken as 0·7. Taking L as 2 ft. stroke, and W equal to R to allow for acceleration, and allowing a drop of 10 lb. steam pressure between boilers and cylinders, all the data are at hand, and substituting these values in equation (8).

$$A = \frac{[4{,}162 + (3{,}960 \times 0{\cdot}02)] \times 7}{90 \times 2 \times 0{\cdot}7 \times 2\frac{1}{2}} = 94{\cdot}2 \text{ sq. inch,}$$

and

$$\text{Diameter of cylinder} = \sqrt{\frac{94{\cdot}2}{{\cdot}7854}} = 11 \text{ nearly,}$$

say, 11 in. diameter of cylinders, which gives a ratio of 2·18 for the length of stroke.

It will be as well to notice here that the effective leverage of the crank has been taken in its best position, viz., as acting at 90 degs., but it is quite possible that the position of the cranks may not be in such a favourable position at starting, and that when neither engine is on the dead centre, one may be in such a position that the slide valve is still closed to the admission of steam, and therefore will be of no assistance to the other engine, which will have to start the load at a leverage somewhat less than the crank radius. For this reason the effective leverage of the crank is often taken as 80 per cent. of the crank radius, and adopting this in the foregoing calculation,

$$A = \frac{[4{,}162 \times (3{,}960 \times 0{\cdot}02)] \times 7}{90 \times 2 \times \frac{80}{100} \times {\cdot}7 \times 2\frac{1}{2}} = 117{\cdot}8 \text{ sq. in. nearly,}$$

and

$$\text{Diameter of cylinder} = \sqrt{\frac{117{\cdot}8}{{\cdot}7854}} = 12{\cdot}2 \text{ in.}$$

or, say, 12 in. diameter of cylinders, which gives a well-proportioned cylinder with the stroke equal to twice the diameter, and, everything considered, this would be the size of cylinder to adopt.

This, then, gives the size of cylinder necessary to start the load. The question of speed may now be considered, and it is required to see if the size of cylinder already determined is large enough to raise the load at the maximum speed, which in this instance is 20 ft. per second. Allowing 20 seconds for acceleration, and the same period for retardation, the mean uniform acceleration a will be

$$a = \frac{20}{20} = 1 \text{ foot per second per second,}$$

and the space S passed over during acceleration or retardation will be

$$S = \frac{1}{2} \times 1 \times 20^2 = 200 \text{ ft.}$$

Consequently, the distance moved through during acceleration and retardation will be 400 ft., leaving only 200 ft. to be moved through at full speed, which gives

$$\frac{200}{20} = 10 \text{ seconds.}$$

The total time for the wind then will be

	Ft.	Seconds.
Acceleration	200	20
Full speed	200	10
Retardation	200	20
	600	50

The number of revolutions of the drum per minute at full speed will be from (25)

$$N = \frac{200 \times 60}{3{\cdot}14 \times 7 \times 10} = 54{\cdot}6 \text{ revs. per min.}$$

and the piston speed from (28)

$$\text{Piston speed} = 2 \times 2 \times 54{\cdot}6 \times 2\tfrac{1}{2} = 546 \text{ ft. per minute.}$$

which is rather high for this type of engine according to usual practice, but there is no reason why a well-designed engine of this type should not be run at even a higher speed. The size of cylinder necessary for full speed may now be obtained, and taking R as equal to (G + W + C).

$$A = \frac{4{,}162 \times 20 \times 60}{4 \times 90 \times 2 \times 54{\cdot}6 \times 2{\cdot}5 \times {\cdot}7} = 74{\cdot}5 \text{ sq. in.}$$

and

$$\text{Diameter of cylinder} = \sqrt{\frac{74{\cdot}5}{{\cdot}7854}} = 9{\cdot}75,$$

which is considerably less than that required to start the load, and consequently once the full speed is reached the steam may be cut off at some point in the stroke to compensate for the large diameter of cylinder. The mean effective steam pressure required at full speed—taking R as before—may be obtained from

$$P = \frac{R \times V \times 60}{4 \times A \times L \times N \times n \times e}$$

which in this case becomes

$$P = \frac{4{,}162 \times 20 \times 60}{4 \times 113 \times 2 \times 54{\cdot}6 \times 2\tfrac{1}{2} \times {\cdot}7} = 57{\cdot}8 \text{ lb. per square inch,}$$

which would be about equivalent to cutting off steam at three-eighths of the stroke. It may be noticed here that the load has been taken in the two foregoing calculations as equal to R in (1), but this really is not so, as, first, once the full speed of 20 ft. per second is attained, the load due to acceleration is to be deducted; and secondly, as the kibble is drawn up, the load due to the weight of rope becomes less. Consequently, the actual time required for acceleration due to the lessened weight of rope would be less than 20 seconds, but for all practical purposes it is near enough to take the figures as in the example.

In ordinary working the steam would be applied for the full length of the stroke, and in most cases allowed to remain so, until when the kibble was approaching the top, the engineman would shut off steam and allow the stored momentum of the moving parts to complete the wind, or it would be absorbed and the engine brought to rest by the application of the brake. A much more economical method would be to keep the throttle valve fully open, and as the engine got up to speed to alter the position of the reversing link so as to give an earlier cut-off to the slide valve, and so work the steam expansively. Hitherto the only means of doing this was by putting over the reversing lever, though usually there are only three notches in the quadrant, corresponding with the full forward and backward movements and mid position; but supposing that intermediate notches were provided for "linking up" it is questionable whether the engineman would take advantage of them, as moving the lever involves considerably more labour. The author, however, has designed an arrangement whereby "linking up" is easily and effectively carried out, and this moreover absolutely prevents any risk of overwinding; it is particularly applicable to engines for sinking purposes, and will be described later.

(*b.*) In this case it will be necessary to determine the quantity of coal to be raised per wind, which will to some extent be dependent upon the size of the tubs, as if very large tubs are in use it may be cheaper to raise one at a time quickly, and occupy a minimum of time in changing, than to adopt multi-decked cages to deal with more than one tub, and some means for simultaneous decking, or to change decks of the cage with the engine. With small tubs, however, it will be absolutely necessary to raise several at a time in order to maintain the required output. Two thousand tons in eight hours gives

$$\frac{2{,}000}{8 \times 60} = 4{\cdot}17 \text{ tons per minute nearly,}$$

which may for the purpose of comparison be dealt with in loads of 2 or 4 tons per wind. Taking the latter quantity, this amount will have to be wound, and the tubs changed, in

$$\frac{4 \times 60}{4{\cdot}17} = 57 \text{ seconds;}$$

or, allowing a margin of say, two seconds, the complete wind must not occupy more than 55 seconds, including changing; in other words, the quantity of coal to be raised is 4 tons per 55 seconds, or 2 tons per 27½ seconds, the former involving a greater weight at a slower speed, and the latter, half the weight, but raised at twice the speed. Taking the average speed of winding for the 4 tons load as 50 ft. per second, the time required for actual winding will be

$$\frac{1,500}{50} = 30 \text{ seconds};$$

leaving 25 seconds for changing. If each wagon or tub carries 2 tons, a double-deck cage will probably require the least diameter of shaft, and the decks can be changed by the winding engine without any means for simultaneous decking. If, however, the tubs carry only 10 cwt., then eight of these must be raised and changed, and to do this in 25 seconds without simultaneous decking, a double-deck cage with four tubs on each deck must be adopted and changed by the winding engine. By adopting a four-deck cage, which requires the least diameter of pit—as previously pointed out in Chapter III.—and winding at a higher speed more time may be allowed for changing, or some means of simultaneous decking may be adopted, leaving the speed of winding unaltered. Undoubtedly changing the decks of the cages is the simplest means, though probably not the best, as there is considerably more wear and tear, especially on the ropes; but it has the advantage of requiring the least expenditure of capital, as even if a double heapstead be arranged at bank, drop cages are necessary at the pit bottom. Assuming for the moment it is decided to use four-deck cages and change by the winding engine, then at least 40 seconds must be allowed for this, which would leave for actual winding only 15 seconds, giving an average speed of winding of

$$\frac{1,500}{15} = 100 \text{ ft. per second};$$

this, though not impossible, would not prove economical owing to the very large engine and drum that would be required in order to obtain such a speed, and the time would be too short to allow the energy imparted to the moving masses to be usefully expended in coming to rest, but would require to be absorbed by braking.

Considering next the 2 tons load, if the tub is of this capacity, or if the cage will carry two 1-ton or four 10-cwt. tubs on one deck, no question of changing is involved, though the speed of winding will be high. Allowing 10 seconds for changing leaves 17½ seconds as the time available for the wind, which gives a speed of

$$\frac{1,500}{17{\cdot}5} = 85{\cdot}7 \text{ ft. per second.}$$

which practically is at the rate of a mile a minute, and the maximum speed will be more than this. If, however, four tubs are to be raised in a two-deck cage,

simultaneous decking becomes absolutely necessary, as only 7½ seconds would be available for actual winding, seeing the two decks would not very well be changed by the engine under 20 seconds, and the speed of winding would become

$$\frac{1,500}{7{\cdot}5} = 200 \text{ ft. per second.}$$

which is practically impossible. To summarise, then, the arrangements may be :—

(A.) With 4 tons load—

(*a*) Two-deck cage with either one 2 tons; two 1 ton; or four ½ ton tubs per deck. Decks changed by winding engine. Average speed of winding, 50 ft. per second.

(*b*) Four-deck cage with two ½ ton tubs per deck, and simultaneous decking by means of double heapstead and one change by winding engine. Average speed of winding, 50 ft. per second.

(*c*) Four-deck cage with two ½ ton tubs per deck, changed at one operation by simultaneous decking. Allowing 15 seconds for changing, leaves 40 seconds for winding, at an average speed of 37·5 ft. per second.

(B.) With 2 tons load—

(*d*) Single-deck cage, with either one 2 tons; two 1 ton; or four ½ ton tubs. Changing to occupy 10 seconds, leaving 17½ for winding, or at an average speed of winding of 85·7 ft. per second.

(*e*) Two-deck cage with either one 1 ton; or two ½ ton tubs per deck, changed simultaneously. Speed of winding same as (*d*).

Of these (*a*), (*b*) or (*c*) is to be preferred to either (*d*) or (*e*) on account of the slower speed of winding. In any of the various arrangements, however, of either (A) or (B), the dead load will be about the same in each case, and may be assumed as follows for (A):—

	Tons.
Coal	4
Cage, &c.	4
Tubs	2
Total	10

And for (B) half this, or 5 tons. This does not allow for the rope, which must be added to find the total dead weight on the rope. Taking a factor of safety of 12 to allow for acceleration, a 5¾ in. circumference rope will be suitable for the 10 tons load, and a 4 in. circumference rope for the 5 tons load, the former weighing, say, 31·5 lb. per fathom, and the latter, say, 15 lb. per fathom, which gives as the weight of rope for (A)—supposing the pulleys 72 ft. in height—

$$\frac{(1,500 + 72)\ 31{\cdot}5}{6 \times 2,240} = 3{\cdot}7 \text{ tons nearly;}$$

and for B

$$\frac{(1,500 + 72) \times 15}{6 \times 2,240} = 1{\cdot}8 \text{ tons nearly;}$$

makes this the total loads on the rope 13·7 tons and 6·8 tons respectively, and has reduced the factor of safety to about 9 for (A) and about 8¾ for (B).

The maximum strain on the winding rope may now be ascertained from (1); but it will first be necessary to determine the maximum speed of winding. By adopting a high maximum speed and a short period of time for steady motion, longer time may be allowed for acceleration and retardation; by adopting a lower maximum speed and lengthening the steady motion period, the acceleration and retardation periods will be shortened. The former has the effect of lessening and the latter of increasing the strain. In the case (A) the time allowed for the wind is 30 seconds, and this may be divided to suit various rates. Suppose 10 seconds each is allowed for acceleration, maximum speed and retardation, then the maximum speed may be obtained from

$$V = \frac{H}{\frac{t_A}{2} + t_M + \frac{t_R}{2}}.$$

when

t_A = time allowed for acceleration.
t_M = ,, maximum speed.
t_R = ,, retardation.
H = depth of pit in deep.

In this case $V = \frac{1,500}{\frac{10}{2} + 10 + \frac{10}{2}} = \frac{1,500}{20} = 75$ ft. per second;

and $a = \frac{75}{10} = 7{\cdot}5$ ft. per second per second;

therefore the space moved over during

Acceleration	=	375 ft.	in 10	seconds.
Maximum speed	=	750 ,,	10	,,
Retardation	=	375 ,,	10	,,
Total	=	1,500 ,,	30	,,

The strain R on the rope will be from (1)

$$R = 13{\cdot}7 + (19{\cdot}7 \times 0{\cdot}02) + \frac{13{\cdot}7 \times 75}{32{\cdot}2 \times 10} = 17{\cdot}3 \text{ tons},$$

which at once reduces the factor of safety of the rope to about 7. By reducing the time for acceleration the factor of safety will be still further reduced. Taking instead of 10 seconds, say 5 seconds, each for acceleration and retardation, thus allowing 20 seconds for maximum speed, gives

$$V = \frac{1,500}{\frac{5}{2} + 20 + \frac{5}{2}} = \frac{1,500}{25} = 60 \text{ ft. per second};$$

and

$$R = 13{\cdot}7 + (19{\cdot}7 \times 0{\cdot}02) + \frac{13{\cdot}7 \times 60}{32{\cdot}2 \times 5} = 19{\cdot}1 \text{ tons},$$

which reduces the factor of safety to only 6·4, and it would be advisable to use a stronger rope. Though the strain is increased at the lift, it will probably prove more economical to adopt the latter speeds, as the maximum speed is lower, and the period of steady motion is increased, thereby allowing the engine to work with an early cut-off and expansion of steam in the cylinders.

For (B) the total time for the wind is 17·5 seconds, which may be divided into periods of 5 seconds each for acceleration and retardation, leaving 7·5 seconds as the steady motion period, and

$$V = \frac{1{,}500}{\frac{5}{2} + 7{\cdot}5 + \frac{5}{2}} = \frac{1{,}500}{12{\cdot}5} = 120 \text{ ft. per second}$$

and the space moved over during

Acceleration	= 300 ft.	in 5	seconds
Maximum speed	= 900 ,,	7½	,,
Retardation	= 300 ,,	5	,,
Total	= 1,500 ,,	17½	,,

and

$$R = 6{\cdot}8 + (9{\cdot}8 \times 0{\cdot}02) + \frac{6{\cdot}8 \times 120}{32{\cdot}2 \times 5} = 12 \text{ tons},$$

which reduces the factor of safety to about 5·3, and as under any circumstances the factor of safety should never be below 6, a stronger rope should be employed say one 4½ in. circumference and weighing 19 lb. per fathom, which will slightly alter the foregoing calculation, R becoming 12·7 tons.

The minimum diameter of the drums from (*b*), will be for (A)

$$\frac{140 \times 1{\cdot}8}{12} = 21 \text{ ft. diameter.}$$

and for (B) taking the 4½ in. rope

$$\frac{140 \times 1{\cdot}4}{12} = 16{\cdot}3 \text{ ft. diameter.}$$

Taking first the case of unbalanced ropes, the data for (A) will be

$W = 17{,}248$ lb. = coal 4 tons + rope 3·7 tons.
$2w = 26{,}880$ lb. = two cages 8 tons + tubs 4 tons.
$q = 8{,}288$ lb. = one rope 3·7 tons.
$D = 21$ ft.
$e = 0{\cdot}8$
$V = 60$ ft. per second.

The steam pressure at the boiler is 140 lb., and probably a fair average will be to take the effective steam pressure as three-fourths of the boiler pressure, which gives

$$P = 140 \times \tfrac{3}{4} = 105 \text{ lb. per square inch.}$$

PLATE XVII.—(*To face page 152*).

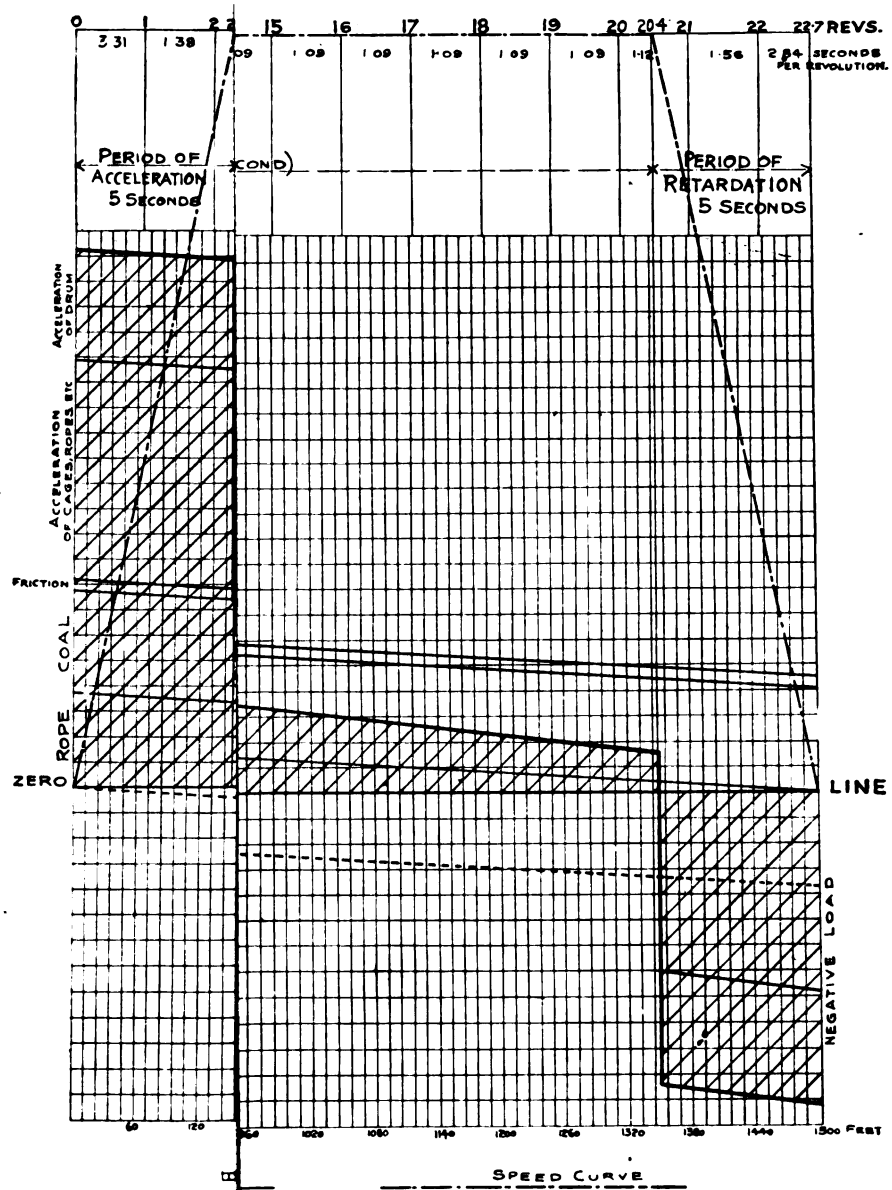
0 1 2 2 15 16 17 18 19 20 20.4 21 22 22.7 REVS.
3.31 1.38 1.09 1.09 1.09 1.09 1.09 1.09 1.12 1.56 2.84 SECONDS PER REVOLUTION.
PERIOD OF ACCELERATION 5 SECONDS
PERIOD OF RETARDATION 5 SECONDS
ACCELERATION OF DRUM
ACCELERATION OF CAGES, ROPES, ETC
FRICTION
COAL
ROPE
ZERO
LINE
NEGATIVE LOAD
60 120 1020 1080 1140 1200 1260 1320 1380 1440 1500 FEET
SPEED CURVE

INE (*see* page 154).

A drum, 21 ft. diameter, will probably weigh 20 tons, and the pulleys may be taken as 4 tons; then

$$y = 10{\cdot}5 \times 0{\cdot}707 = 7{\cdot}42,$$

and

$$v = \frac{7{\cdot}42 \times 60}{10{\cdot}5} = 42{\cdot}4 \text{ ft. per second;}$$

therefore,

$$F = \frac{24 \times 2{,}240 \times 42{\cdot}4^2}{64{\cdot}4} = 1{,}500{,}738,$$

$$E = \frac{52{,}416 \times 60^2}{64{\cdot}4} = 2{,}930{,}087,$$

and

$$C = 1{,}500{,}738 + 2{,}930{,}087 = 4{,}430{,}825.$$

The time allowed for acceleration is 5 seconds, and during this period the length of rope on the ascending side is decreasing, whilst the length of rope on the descending side is increasing, consequently the lessened weight due to the rope at the end of the acceleration period will be on the ascending side

$$\frac{1}{2} V t \times 5{\cdot}25 = \frac{60 \times 5 \times 5{\cdot}25}{2} = 787{\cdot}5 \text{ lb.},$$

and on the descending side it will be increased by a like amount, which are both in favour of the engine, and taking the mean as 787·5 lb., this should be deducted from W. It is now necessary to determine m for the acceleration period, which will be

$$m = \frac{150}{3{\cdot}14 \times 21} = 2{\cdot}27 \text{ revolutions.}$$

Then from (18)

$$d = \sqrt[3]{\frac{4{,}430{,}825 + [17{,}248 - 787{\cdot}5 + (52{,}416 \times 0{\cdot}02)] \times 150}{4 \times 105 \times 0{\cdot}7854 \times \frac{2}{12} \times 2{\cdot}27 \times 0{\cdot}8}} = 41{\cdot}3 \text{ in.}$$

say, 42 in. diameter cylinders by 7 ft. stroke, which will allow for area of piston rod. The piston speed may now be ascertained from (25) and (26)

$$N = \frac{60}{3{\cdot}14 \times 21} \times 60 = 54{\cdot}5$$

and

$$\text{Piston speed } 2 \times 7 \times 54{\cdot}5 = 763 \text{ ft. per minute,}$$

which, though high, is under the limit of 800 ft. per minute.

For (B) it will be evident, owing to the very high speed of winding—viz., 120 ft. per second, that in order to obtain a reasonable piston speed the diameter of the drum will require to be more than the minimum of 16·3 ft., and may be taken as at least 25 ft. diameter. The data then will be

$W = 9{,}108$ lb. = coal 2 tons, rope 2·2 tons,
$2w = 13{,}440$ lb. = two cages 4 tons + tubs 2 tons,
$q = 4{,}928$ lb. = one rope 2·2 tons,
$D = 25$ ft.,
$P = 105$ lb. per square inch,
$e = 0{\cdot}8$,
$V = 120$ ft. per second.

The drum may be taken as 20 tons and the pulleys as 4 tons, and

$$y = 12{\cdot}5 \times 0{\cdot}707 = 8{\cdot}8,$$

$$v = \frac{120 \times 8{\cdot}8}{12{\cdot}5} = 84 \text{ ft. per second,}$$

$$F = \frac{24 \times 2{,}240 \times 84^2}{64{\cdot}4} = 5{,}890{,}226$$

$$E = \frac{27{,}826 \times 120^2}{64{\cdot}4} = 6{,}221{,}963,$$

and $$C = 5{,}890{,}226 + 6{,}221{,}963 = 12{,}112{,}189.$$

The time allowed for acceleration is 5 seconds, and the mean load to be deducted owing to the movement of the ropes will be

$$\frac{120 \times 5 \times 19}{2 \times 6} = 950 \text{ lb.}$$

and $$m = \frac{300}{3{\cdot}14 \times 25} 3{\cdot}8$$

Then from (18)

$$d = \sqrt{\frac{12{,}112{,}189 + [9{,}408 - 950 + (7{,}776 \times 0{\cdot}02\,] \times 120}{4 \times 105 \times 0{\cdot}7854 \times \frac{2}{12} \times 3{\cdot}8 \times 0{\cdot}8}} = 44{\cdot}5 \text{ in.}$$

which gives a larger cylinder than that required for (A). Even supposing the cylinders were made large enough in diameter to suit a 7 ft. stroke, the piston speed is much too high, as

$$N = \frac{120}{3{\cdot}14 \times 25} \times 60 = 91{\cdot}8 \text{ revolutions per minute,}$$

and $$\text{Piston speed} = 2 \times 7 \times 91{\cdot}8 = 1{,}285 \text{ ft. per minute.}$$

Consequently, for the same output there is no advantage in raising a light load quickly. Even in the case of (A) if the investigation be followed further by increasing the static load, and allowing more time for the wind, a slightly smaller engine may do the same work, but with probably a greater consumption of steam. Fig. 315 (Plate XVII.) is a theoretical graphical representation of (A) with unbalanced ropes, which clearly shows the enormous amount of work due to acceleration, and at the end of the maximum speed period, the negative work which must be absorbed by the brakes. It has been assumed that though the load varies during the full speed period due to the rope, the speed remains constant, hence the number of seconds per revolution remains the same; such a condition, however, would not occur in practice. It would seem, then, that it becomes a question in designing a winding engine to so proportion the static and acceleration loads, with regard to the time allowed for completing the wind, that the whole of the work may be done with the least consumption of steam.

Considering next the case of (A) with a counter-balance rope underneath the cages the data will be :—

W = 8,960 lb. = coal 4 tons.
$2w$ = 26,880 lb. = two cages 8 tons + tubs 4 tons.
q = 24,640 lb. = two ropes 7·4 tons + one balance rope, say, 3·6 tons.
D = 21 ft.
V = 60 ft. per second.
P = 104 lb. per square inch.
m = 2·27 revolutions.
S = 150 ft.
e = 0·8.

The drum and speed being the same, F will remain as before,

$$F = 1{,}500{,}738,$$

but E will be increased owing to the balance rope, hence

$$E = \frac{60{,}480 \times 60^2}{64{\cdot}4} = 3{,}380{,}869,$$

and

$$C = 1{,}500{,}738 + 3{,}380{,}869 = 4{,}881{,}607.$$

Then from (18)

$$d \sqrt[3]{\frac{4{,}881{,}607 + [8{,}960 + (60{,}480 \times 0{\cdot}02)] \times 150}{4 \times 105 \times 0{\cdot}7854 \times \frac{2}{12} \times 2{\cdot}27 \times 0{\cdot}8}} = 40 \text{ in. diameter.}$$

with 80 in. stroke, or say 41 in. diameter by 6½ ft. stroke, which is a rather less ratio than 2 to 1 of length of stroke to piston diameter. The piston speed would correspondingly be reduced, N remaining the same.

Piston speed = 2 × 6·5 × 54·5 = 708 ft. per minute; or the stroke and piston speed may be kept the same and the cylinder made 40 in. diameter, or 2 in. less than that required without the balance rope, giving a saving of 9·3 per cent. in power each wind.

Another method of counter-balancing the rope is by means of a spiral drum, but owing to its enormous weight, instead of a saving in power there is actually a loss, more energy being required to give acceleration to the drum, than is saved by balancing the ropes. They are, moreover, clumsy and expensive to build, and their use is certainly not to be recommended. Almost any means of counter-balancing the ropes would appear to be better than by using a spiral drum.

The foregoing examples clearly show the effects of winding at high speeds, and the advantage of keeping the drum as light and as small in diameter as possible, consistent with reasonable piston speed, will be apparent.

During the period of acceleration all the steam possible will be put on the piston, but so soon as the maximum speed is reached the steam will be worked expansively, and in order to obtain the greatest economy due to expansive working this period should be as long as possible. Against this, however, is the fact that if

a short period of acceleration be allowed, a larger engine is required than would be if this period were longer, and consequently so little steam is required during the maximum speed period that such a high ratio of expansion is difficult to attain, unless compounding be resorted to. Then again, there is the question of retardation. If the engine and moving masses are to be stopped in a short retardation period or very quickly, this means that at the end of the maximum speed period the brakes have to be at once applied, and with considerable force. Many winding engines—and they are probably in the majority—work with full steam, for, say, half or three-quarters of the time occupied in making the wind, when the steam is shut off and the stored energy in the moving masses allowed to "run out," so to speak, and the brake is applied or the engine reversed near the end to finally bring them to rest. Such a method is far from being economical. It is true the energy imparted by the steam during a portion of the total number of revolutions is enough to raise the load, but if the steam were worked expansively for a greater portion of the total number of revolutions, a less weight of steam would be consumed. Steam cannot be used economically unless worked expansively.

Instead of exactly balancing the ropes, then, it would appear that it would be better to positively overbalance them in such a way that the overbalance would assist the engine in giving acceleration to the moving masses during the acceleration period, then exactly balance during the maximum speed period, and finally negatively overbalance again during the period of retardation, to reduce the braking power necessary to bring the engine to rest; and probably the nearest approach to such an ideal condition could best be obtained by a combination of the partly conical drum and a balance rope. For instance, in the last example, instead of the drum being parallel, it might be constructed with a smaller diameter at the ends, so that the engine would have the advantage of starting the load on a small diameter, whilst the empty cage would be suspended from the large diameter. During the period of acceleration the ascending rope would coil on the smaller diameter, and then at the end of this period quickly ascend to the largest, after which the rope would coil on the large diameter. The descending rope, on the other hand, would coil from the large diameter on to the smaller, thus throwing the balance of the load against the engine in order to bring it to rest. A balance rope under the cages, however, would scarcely be applicable, owing to the different velocities of the two ropes, that on the descending side moving quicker than that on the ascending side due to the different diameters of the drum, unless provision was made by having the sump deep enough to accommodate the rope in its downward movement.

An arrangement as shown in figs. 316 and 317, where the counter-balance rope is confined to a borehole directly under the drum and loaded with old chains, might

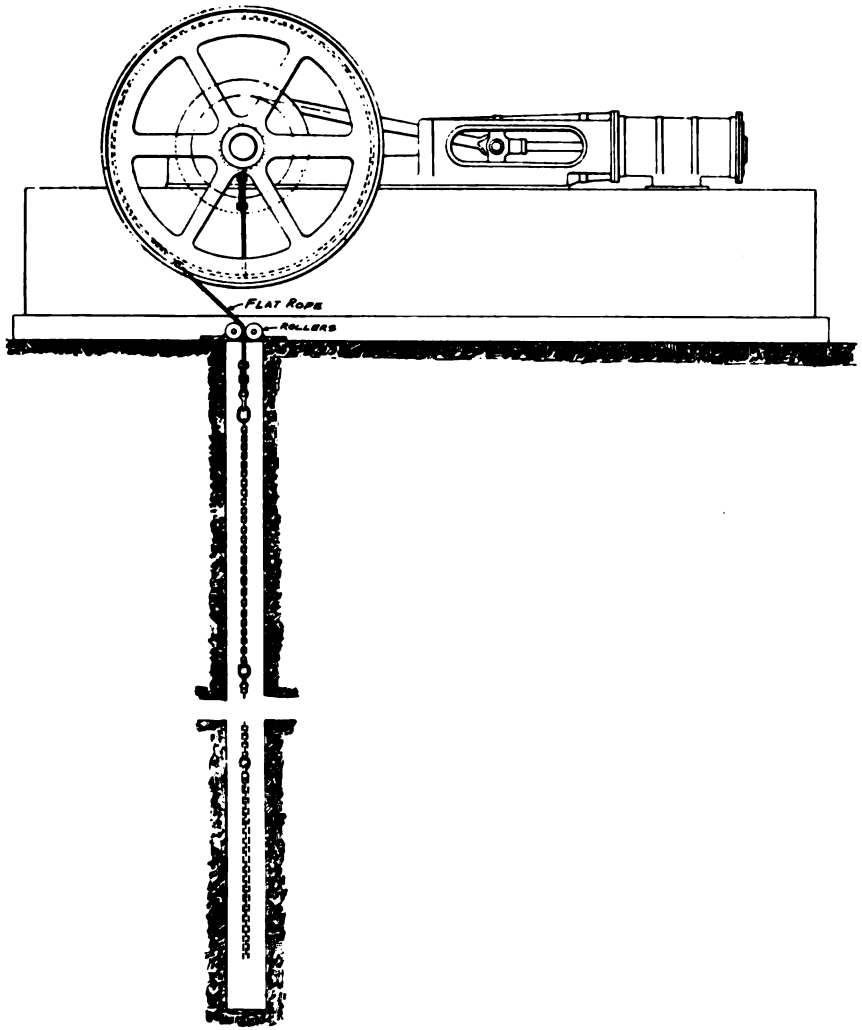

FIG. 316.

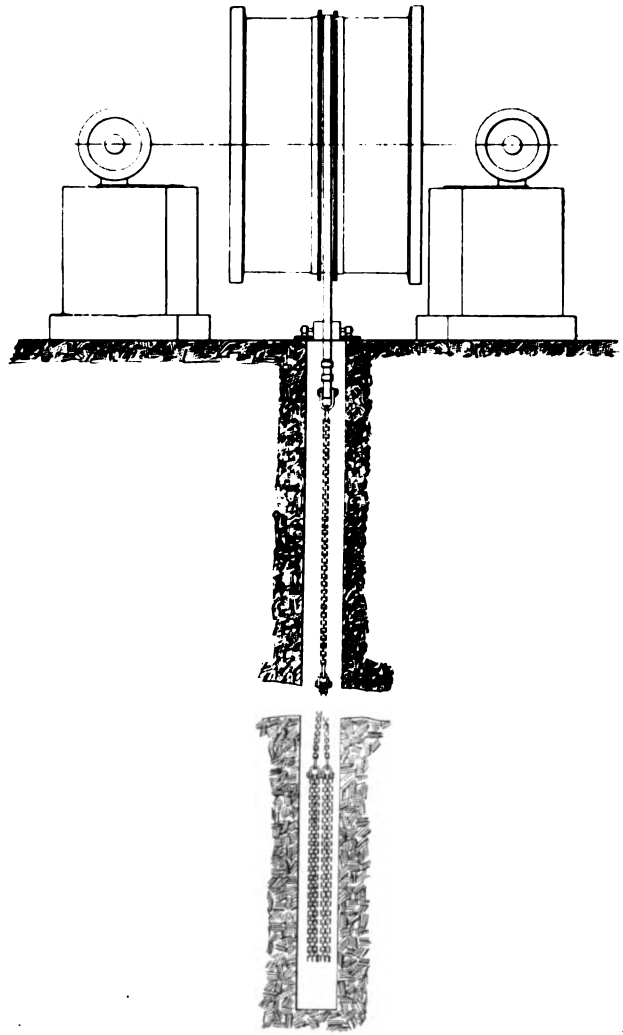

FIG. 317.

answer very well. It would also be unnecessary to adopt the conical drum, as at the end of the wind the weight raised by the balance rope might be anything, and act for just so long as may be determined beforehand. By some such means, then, the energy imparted by the engine to give acceleration to the moving masses might be stored at the end of the wind, to assist the engine again in starting.

The steam consumption of many winding engines is notoriously extravagant owing to what is neither more nor less than bad design. The constructional details are often badly proportioned; the drum is too heavy; the eccentrics are fixed to exactly lead the crank by 90 degs., neither lead, compression nor expansion being allowed, and the valves (especially the exhaust), ports and pipes are too small; with the result that the steam is wire-drawn, and a considerable portion of the energy wasted in driving the exhaust steam out of the cylinder. It has been found that by re-arranging the valve gear, so as to work the steam with more or less expansion, speed of winding has not decreased, but has been increased, with a less consumption of steam.

The expansion of steam in a cylinder is usually assumed to follow—for all practical investigations—the law of "Boyle" or "Mariotte," which states that for a perfect gas expanding at a constant temperature the pressure varies inversely as the volume, or space occupied; and which gives a hyperbolic curve on an indicator diagram. This, however, is not strictly true, as the expansion of steam is more or less affected by wire drawing, clearance, cylinder condensation, &c., and where very great economy is required, means should be taken to avoid as far as possible losses from these causes.

In the following formulæ let

P = absolute initial steam pressure (boiler pressure + 14·7 lb.),
p = mean or average steam pressure for the whole stroke,
p_1 = back pressure,
R = nominal ratio of expansion,
r = actual ratio of expansion,
L = length of stroke in inches,
l = length of stroke in inches before the steam is cut off,
L_1 = length of stroke in inches + clearance,
l_1 = length of stroke in inches before the steam is cut off + clearance,
c = fraction of the stroke representing clearance at the end of cylinder, including steam passages,
Hyp. log. = hyperbolic logarithm = common log. × 2·302585,
A = area of cylinder in square inches.

Then neglecting clearance $\mathrm{R} = \frac{\mathrm{L}}{l}$

and $$p\ \mathrm{P}\left(\frac{\text{Hyp. log. R} + 1}{\mathrm{R}}\right) - p_1.$$

If clearance be taken into account,

$$r = \frac{L + c}{l + c} = \frac{L_1}{l_1} = \frac{R + c}{1 + Rc}$$

and

$$p = P\left(\frac{\text{Hyp. log. } r + 1}{r}\right) - p_1$$

This gives as p the theoretical mean pressure, which is never obtained in practice from an indicator diagram, the area of which always gives a less mean steam pressure than the theoretical. The ratio of the actual to the theoretical mean pressure is termed the diagram factor, and varies in value from 0·7 for small engines to 0·95 in large well-designed engines; for winding engines it may be taken as 0·8, and the theoretical mean steam pressure therefore should be multiplied by this value to obtain the approximate actual mean pressure.

The back pressure p_1 varies from 16 to 20 pounds per square inch, including the atmospheric pressure for non-condensing engines, and from 2½ to 5 pounds for condensing engines; and the lower this pressure the greater is the efficiency.

The mean effective steam pressure required in the cylinder of a winding engine during the full speed period may be obtained from

$$p = \frac{(W + G) \times S}{4 \times A \times L \times m \times e \times n}$$

where S = distance in feet moved through, and m = number of revolutions during this period.

Thus taking the case of (A) with a counter-balance rope, and the cylinders 40 in. diameter by 7 ft. stroke, having a piston rod 7 in. diameter.

Then

$$p = \frac{[8{,}960 + (60{,}480 \times 0{\cdot}02)] \times 1{,}200}{4 \times 1{,}218{\cdot}2 \times 7 \times 18{\cdot}2 \times 0{\cdot}8} = 24{\cdot}5 \text{ lb.}$$

as the theoretical mean effective steam pressure required. To this is to be added the back pressure p_1, and it will also be necessary to increase it by an amount, so that when multiplied by the *diagram factor* the actual pressure would be 24·5 lb. per square inch. This will be

$$p = \frac{24{\cdot}5}{0{\cdot}8} = 30{\cdot}6 \text{ lb.}$$

and taking the back pressure as 20 lb. the total pressure will be

$$p = 30{\cdot}6 + 20 = 50{\cdot}6 \text{ lb.}$$

The absolute initial pressure will be

$$P = 140 + 14{\cdot}7 = 154{\cdot}7 \text{ lb.}$$

and it is now required to find the ratio of expansion and the period of admission before the steam is cut off, to give a mean pressure, including the back pressure upon the piston, of 50·6 lb. To facilitate calculations of this description, the following table of constants for the mean pressure of steam for different ratios of expansion is given :—

MEAN PRESSURE CONSTANTS.

Fraction of the stroke at which steam is cut off.	Ratio of expansion or number of times steam is expanded.	Constant or $\frac{\text{Hyp. log. } r_1 + 1}{r_1}$ Absolute initial pressure = 1.	Fraction of the stroke at which steam is cut off.	Ratio of expansion or number of times steam is expanded.	Constant or $\frac{\text{Hyp. log. } r_1 + 1}{r_1}$ Absolute initial pressure = 1.
Full stroke	1·00	1·000	$\frac{1}{6}$	6·00	·465
$\frac{9}{10}$	1·11	·995	$\frac{1}{7}$	7·00	·421
$\frac{8}{10}$	1·25	·978	$\frac{1}{8}$	8·00	·385
$\frac{3}{4}$	1·33	·964	$\frac{1}{9}$	9·00	·355
$\frac{7}{10}$	1·42	·951	$\frac{1}{10}$	10·00	·330
$\frac{2}{3}$	1·50	·937	$\frac{1}{11}$	11·00	·309
$\frac{5}{8}$	1·60	·919	$\frac{1}{12}$	12·00	·290
$\frac{6}{10}$	1·67	·906	$\frac{1}{13}$	13·00	·274
$\frac{1}{2}$	2·00	·846	$\frac{1}{14}$	14·00	·260
$\frac{4}{10}$	2·50	·766	$\frac{1}{15}$	15·00	·247
$\frac{3}{8}$	2·67	·742	$\frac{1}{16}$	16·00	·236
$\frac{1}{3}$	3·00	·700	$\frac{1}{17}$	17·00	·225
$\frac{3}{10}$	3·33	·662	$\frac{1}{18}$	18·00	·216
$\frac{1}{4}$	4·00	·596	$\frac{1}{19}$	19·00	·208
$\frac{1}{5}$	5·00	·522	$\frac{1}{20}$	20·00	·200

The pressures as given in the example may be reduced; as by proportion

$$P : p + p_1 :: 1 : \text{constant},$$

from which

$$\text{Constant} = \frac{50{\cdot}6}{154{\cdot}7} = {\cdot}327,$$

which from the table corresponds to a ratio of expansion of about 10, and the cut-off would take place therefore at one-tenth of the stroke, or

$$\tfrac{1}{10} \times 84 = 8{\cdot}4 \text{ in.}$$

This, however, does not allow for clearance, and the effect of which will be to reduce the number of expansions, and raise the mean pressure of the steam. Taking the total clearance as 5 per cent. of the stroke, or 4·2 in., then the actual ratio will be

$$r = \frac{L + c}{l + c} = \frac{84 + 4{\cdot}2}{8{\cdot}4 + 4{\cdot}2} = 7;$$

and

$$p = 154{\cdot}7 \left(\frac{\text{hyp. log. } 7 + 1}{7}\right) - 20$$

$$= 45{\cdot}1 \text{ lb. per square inch};$$

which is much higher than that required. The cut-off therefore must take place earlier, so that the actual ratio of expansion shall be 10. Then—

$$\frac{84 + 4{\cdot}2}{l + 4{\cdot}2} = 10 = 88{\cdot}2 = 10\,l + 4{\cdot}2$$

from which $l = 4{\cdot}62$ in., as the distance which must be travelled by the piston before the steam is cut off.

With the introduction of high-pressure steam and the desire for greater economy in the steam consumption of winding engines, compound engines have latterly been adopted. The advantages of compounding lie chiefly in the fact that when steam is expanded in a single cylinder with a high ratio of expansion the difference in temperature between the initial and final pressure of the steam is considerable, with the result that the temperature of the cylinder walls and piston is lowered at the end of the stroke, and consequently a portion of the entering high-pressure steam at the commencement of a new stroke is liquefied; thus increasing the losses due to condensation. There is also a wide variation of pressure upon the piston, from the full boiler pressure at the beginning of the stroke to the terminal pressure—which in condensing engines will be about 8 lb. to 12 lb. per square inch, or twenty to twenty-two in a non-condensing engine at the end, and necessarily a varying turning effort is exerted upon the crank pin, which of course must be designed to withstand the stresses due to the initial pressure.

In the compound engine the total expansion of the steam is distributed over two cylinders; in a triple-expansion engine over three cylinders, and so on, a partial expansion taking place in each, so that the difference between the temperature of the steam entering and that of the steam leaving the cylinders is not so great and the losses from condensation are accordingly reduced; moreover, there is less variation in pressure upon each piston, and consequently a more even turning effort is exerted upon the crank pin.

For winding, the engines may have two or four cylinders, the former being of the "receiver" type and the latter usually of the "Woolf" type, though the four-cylinder engine may also be of the receiver type, and is then termed a "cross compound" engine. This latter expression is often sometimes applied to the two-cylinder engine, though this should more correctly be spoken of as a "twin-compound" type. In the "Woolf" system the steam from the high-pressure cylinder is directly passed to the low-pressure cylinder, where it acts upon the low-pressure piston, and is finally exhausted. The two pistons therefore must commence and end their strokes together, though not necessarily in the same direction. When the strokes differ in time, as is the case in a two-cylinder engine with the cranks coupled at right angles to each other, a receiver becomes necessary into which the steam from the high-pressure cylinder is exhausted and stored

during the period the low-pressure valve is closed to admission. Probably of the two systems the "receiver" type is to be preferred to the "Woolf" type for winding engines.

The difficulty, however, in the application of compounding to a winding engine is in the intermittent character of its working. So long as a compound engine can be kept working there is a regular supply of steam to the low-pressure cylinder and no difficulty is experienced; but when the engine has to be stopped and restarted again every few seconds with a widely varying load, the conditions are different. In the "Woolf" system, when the engine is standing, no steam is available for restarting in the low-pressure cylinder except what remains in the cylinders and connecting pipes, between the exhaust side of the high-pressure piston and the steam side of the low-pressure piston. It is easily seen therefore that should the engine stand for even a short period of time the temperature, and consequently the pressure of the steam, will fall, and this reduced pressure only will be available to act upon the piston at the moment when the full pressure is most required—at that of starting. In the receiver engine the conditions are a little better, as the receiver—especially when the receiver is of the re-heater type and of sufficient capacity—is to the low-pressure piston what the boiler is to the high-pressure piston. To overcome the difficulty connected with starting, Professor Galloway, in the compound engines for the Llanbradach Pit, introduced a self-acting reducing valve between the main steam pipe and the pipe connecting the high-pressure to the low-pressure cylinders, and so maintained a constant supply of steam to the low-pressure piston for re-starting. By this means the engines start as easily and as smoothly as any other winding engine.

The cylinders of compound engines should be so proportioned with relation to pressure and volume that the amount of work done in each is about equal, and especially so when there are only two cylinders acting on cranks at right angles to each other, as it is evident that either the low-pressure or the high-pressure cylinder may be required to start the load. With four-cylinder tandem compound engines the high-pressure cylinder is sometimes designed to do more work than the low-pressure in order to secure a better starting effort. This, however, is not favourable to economy, and, if properly-arranged reducing valves be provided, would seem to be unnecessary.

To determine the dimensions of a compound engine, the whole of the work may be referred to an equivalent single cylinder, in which the whole of the expansion is assumed to take place, and the dimensions of such a cylinder may be taken as those of the low-pressure cylinder of the actual engine. The mean pressure of the steam, point of cut-off, &c., may be obtained from the formulæ already given. To determine the ratio of the cylinders, let

A = area of large cylinder,
a = area of small cylinder,
P = absolute initial pressure of the steam less an allowance of, say, 5 lb. for loss of pressure in steam pipes,
p = absolute terminal pressure of the steam,
R = ratio of expansion, or number of times the steam is expanded,
r = cylinder ratio =

$$\frac{\text{area of large cylinder} \times \text{length of stroke,}}{\text{area of small cylinder} \times \text{length of stroke.}}$$

Then approximately

$$R = \frac{P}{p}$$

and the best proportion of a to A is

$$a = \frac{A}{\sqrt{R}}.$$

The terminal pressure P should be taken at about 12 lb. per square inch for condensing, and 22 lb. for non-condensing engines.

Considerable variation in the cylinder ratios is allowable, and ordinarily for winding engines the ratio $\frac{A}{a}$ varies from 2 to 3. The aim should be, however, to so proportion the cylinders that the expansion takes place in each cylinder with as far as possible the least fall of temperature in the steam entering and leaving each cylinder, and an equal division of work.

A compound winding engine is necessarily much more complicated than a simple engine, and to obtain the full advantage of the economy resulting from compounding, the engines should be condensing. The most satisfactory arrangement of condenser is an independent one, which should be sufficiently large to condense the sudden rushes of steam during the acceleration period before the expansion gear comes into action. In addition to the ordinary main steam regulating valve, stop valves must be fitted between the receiver or connecting pipes from the high-pressure cylinder, and the low-pressure cylinder, all the valves being controlled by one lever.

Whilst it is desirable that the winding engine should work as economically as possible, it must not be forgotten that the profit on the working of a colliery depends upon the amount of coal wound by the engine, and that the saving effected by adopting expensive and complicated valve gears, superheated steam, and condensing arrangements may amount to very little, especially when the fuel used is of little or no market value, and it is certainly more than probable that the saving that might be effected in many winding engines would not pay interest alone on the capital expenditure that might be incurred. A winding engine should be strongly—even massively—built, fully large for its work, simple in construction,

and the valve gear should be as simple as circumstances—depending upon the economy required—will allow. The drum should be as small and as light as possible, and the ropes should be balanced. The engine should be placed at such a distance from the shaft that the side friction of the rope on the drum and pulleys is reduced to a minimum, or at least far enough back so that the included angle, with the pulley as the apex and the traverse of the rope on the drum as the base, does not exceed 10 degs., or 5 degs. on each side of the centre line of pulley.

Within the last few years considerable care and attention have been given to the design of winding engines, particularly with regard to valve gear, so as to render them, as far as possible, more efficient machines. The importance of the effect of a heavy drum has been recognised, and though heavy cast iron drums still predominate, built-up steel drums with arms of channel or I section secured to a cast iron boss, built-up rim and steel plate lagging are now being constructed. They are more expensive than cast iron drums, but if by adopting a built-up steel drum, slightly smaller cylinders may be employed to do the same work, the resulting economy will justify the extra cost.

Messrs. A. Barclay, Sons and Co Limited, of Kilmarnock, have been kind enough to supply detail drawings of the splendid sets of winding engines supplied to Messrs. the Wearmouth Coal Company Limited for the two shafts of their Hylton Colliery, and shown in fig. 318, which is from a photograph of the engines *in situ*. The cylinders are 34 in. in diameter by 6 ft. stroke, controlled by automatic cut-off gear on Cornish valves, and the drum is 20 ft. diameter by 12 ft. wide. The steam pressure is 120 lb. per square inch, and the net load is 4½ tons, the depth of the pit being 900 yards. A balance rope under the cages is used.

The cylinders shown in figs. 319 to 322 are of very hard twice-remelted cast iron with short ports; and the ports are carried low down to ensure the drainage of the cylinder—both important points in the design of a winding engine. The cylinder covers, figs. 323 to 326, are, however, fitted with spring loaded relief valves, to prevent any danger from shock due to the accumulation of water from condensation of the steam. The feet at one end of the cylinder are keyed between snugs cast on the sole plate, those at the other end being merely bolted thereto, the hole in the foot being elongated so as to leave just enough freedom for expansion. The main steam pipe is 10 in. diameter, and the branches from this to each cylinder are 8 in. diameter, so that the steam supply being ample, the steam chests are kept small and close to the cylinder, and clearance losses are reduced to a minimum. The pistons are of cast iron, 7¼ in. wide, fitted with junk rings secured with T head bolts, as will be seen from fig. 325, where part of the piston is shown, and secured on the cone of the piston rod by a large wrought iron nut. Each piston has two " Rickaby " cast iron packing rings A (fig. 327) of angle bar section, which

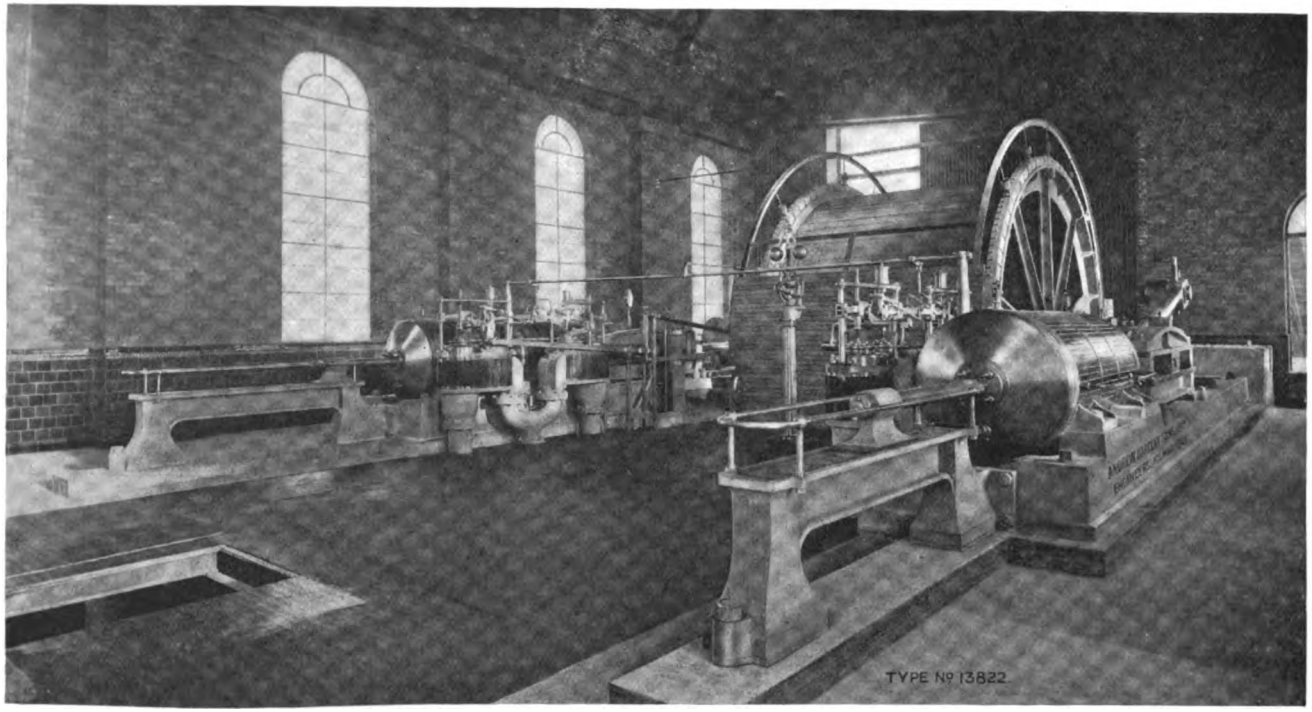

FIG. 318.—THE HYLTON WINDING ENGINES.

Fig. 319.

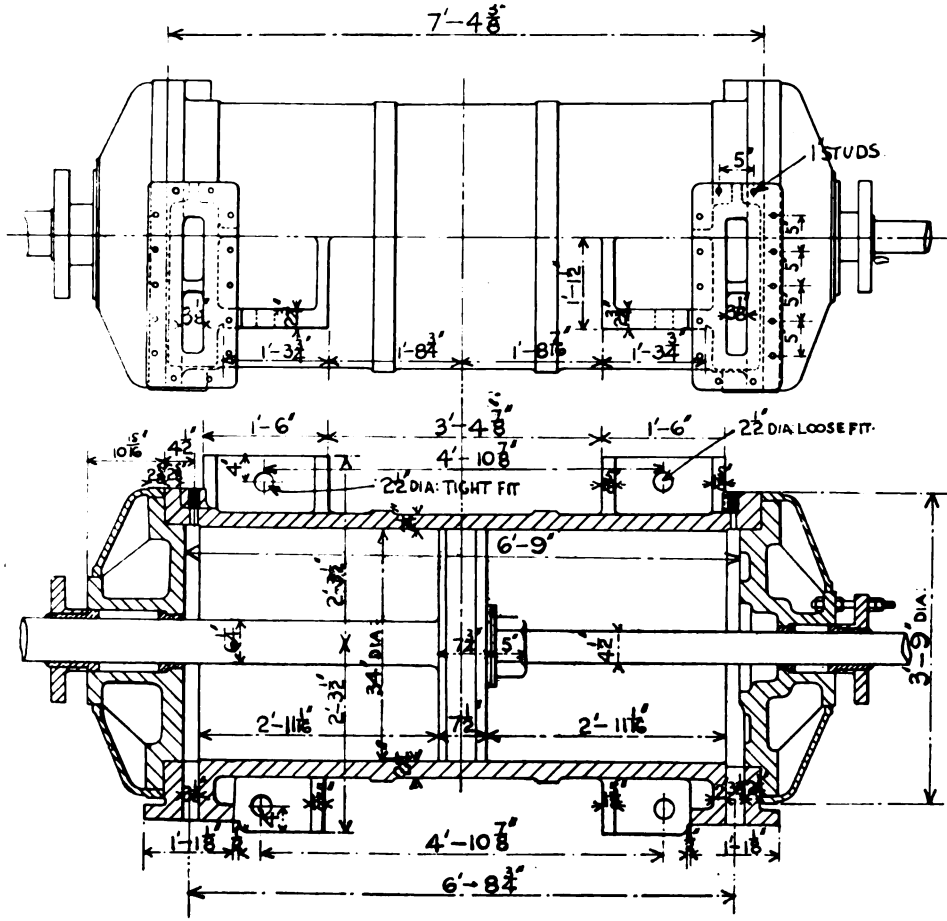

Fig. 321.

Fig. 320.

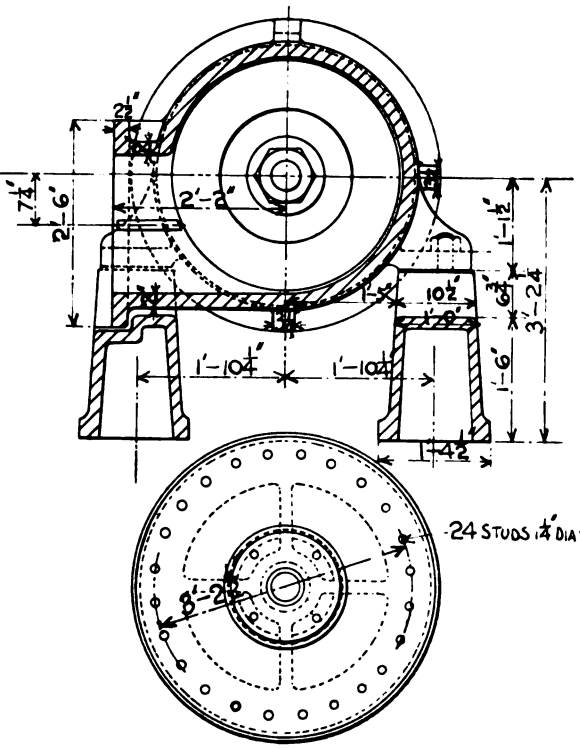

Fig. 322.

Figs. 319 to 322.—Hylton Winding Engines—Cylinders.

are carefully machined and polished on the wearing surfaces, and split with an angular cut; and the top flange at each side of the cut is recessed and fitted with a steel tongue to keep the cut steam-tight. Between these two packing rings is a steel coil of rectangular section, which gives an upward as well as a lateral pressure to the rings, keeping them steam-tight against the piston and junk ring flanges and the walls of the cylinder. The Cornish valves are of gunmetal, the steam valve being 8 in. in diameter, and the exhaust valve 9 in. diameter. They are of the

FIG. 323. FIG. 324. FIG. 325.

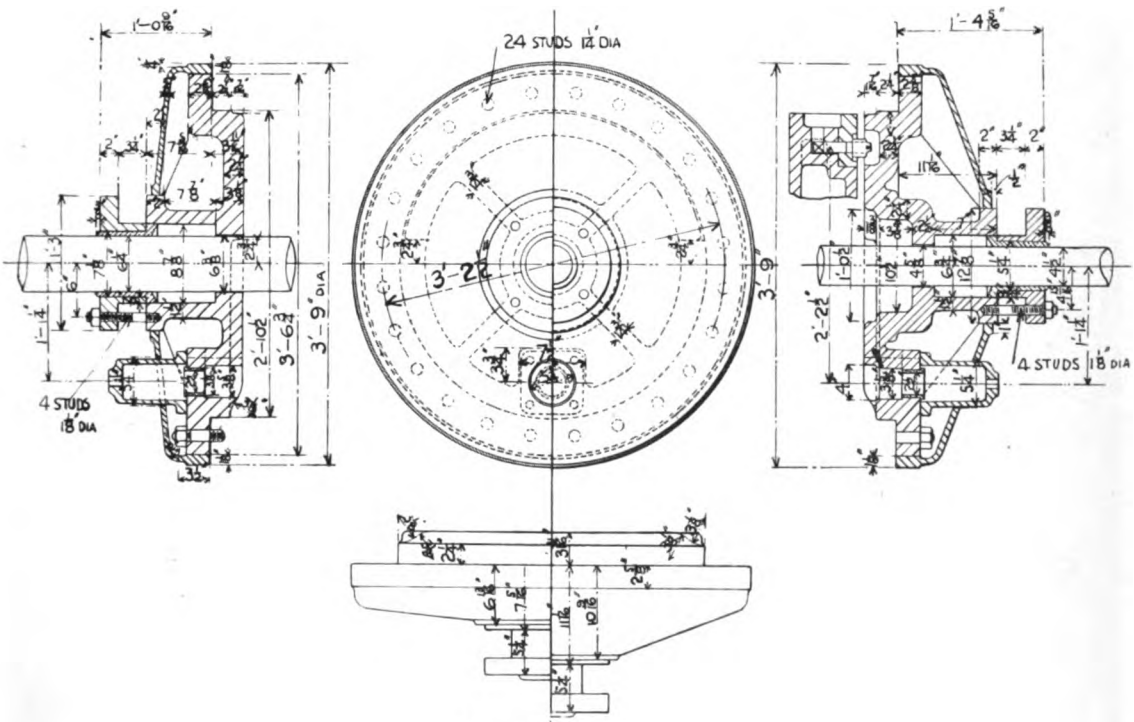

FIG. 326.

FIGS. 323 TO 326.—HYLTON WINDING ENGINES—CYLINDER COVERS.

internal type, which is probably the best shape for large valves of this class working with high steam pressures, and both seat and valve are cast from the same melting of metal, to minimise the effects of unequal expansion, which would occur if the valve and seat were cast from different meltings. The valve spindles are 1¼ in. diameter

The main stop valve is 10 in. diameter, and is of the internal equilibrium valve type, as shown in figs. 328 to 333; it is raised by a small eccentric keyed

to a spindle working in brackets secured to the top of the cover, and is thus easy to handle and retains its shape and steam tightness. Figs. 333, 334 and 335 show an external equilibrium valve, which will explain the difference between the internal and external types of Cornish valves.

The sole plates, which are shown on the foundation plan, figs. 336 and 337, are of box section, 18 in. deep by 1½ in. thick, and carry massive four-bar guides, shown in figs. 338 to 341. The sole plates are raised where the cylinders are seated, so that the feet, which take the strain, shall be as near as possible to the centre line of the engine. Each sole plate weighs about 14 tons, and is one single casting.

The crank shaft, shown in figs. 342 to 347, is of the best forged steel, 24 ft. 2½ in. over all, the centres of the engines being 25 ft. The journals are 16 in.

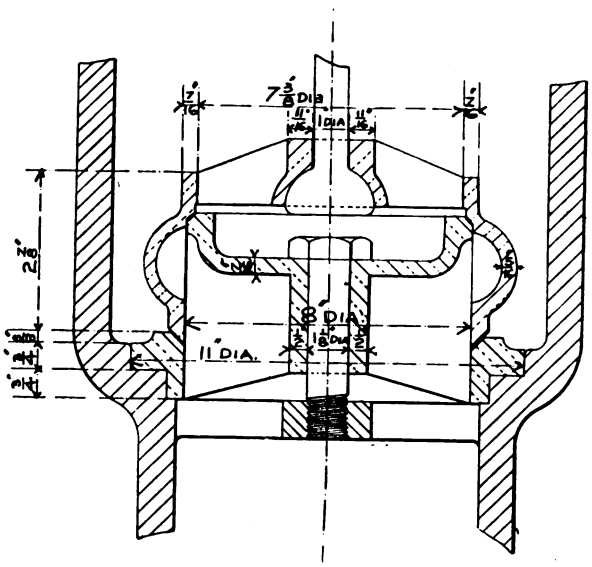

Fig. 333.—External Equilibrium Valve.

diameter by 24 in. long, and where the drum sides are fixed the shaft is 18¼ in. diameter. In order to ensure freedom from imperfections that occur in the centre of large masses of forged steel, the shaft is made hollow by having a 5 in. hole bored from end to end. The crank is also of forged steel, and is shown in figs. 348 and 349. The method of fixing the crank pin deserves notice. As will be seen, the part fitted to the crank is slightly tapered, but is of larger diameter than the journal, and is secured in its place by a large nut.

The crank shaft bearings of winding engines are mostly made angular, the idea being that such a form is more suitable to resist the pull on the ropes, but as

PLATE XVIII.—(*To face page 168*).

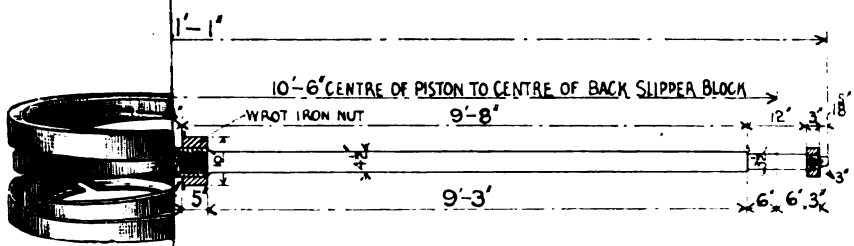

FIG. 327.—(*See*—PISTON ROD.

FIG. 328.

FIG. 331.

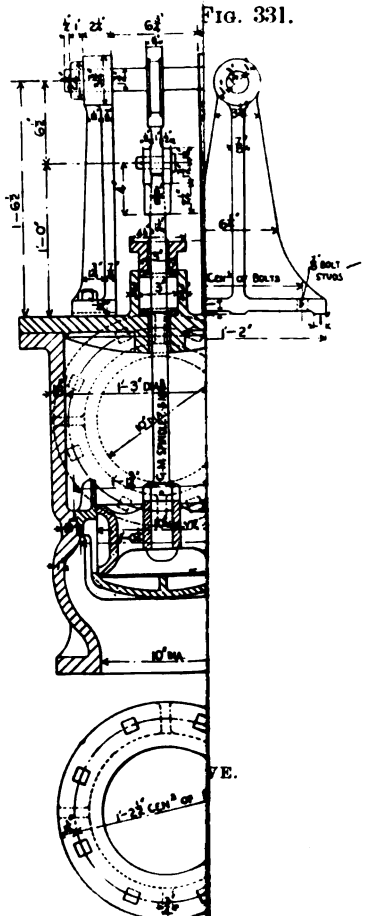

FIG. 332

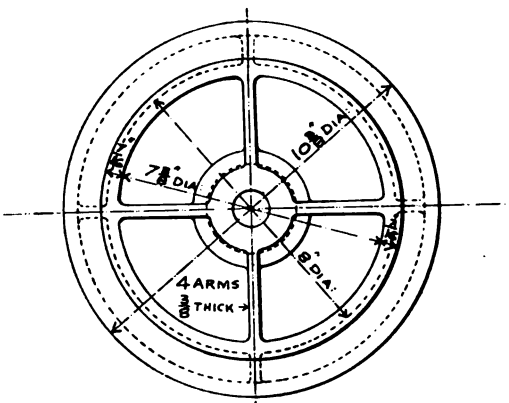

PLAN OF COVER

FIG. 334.

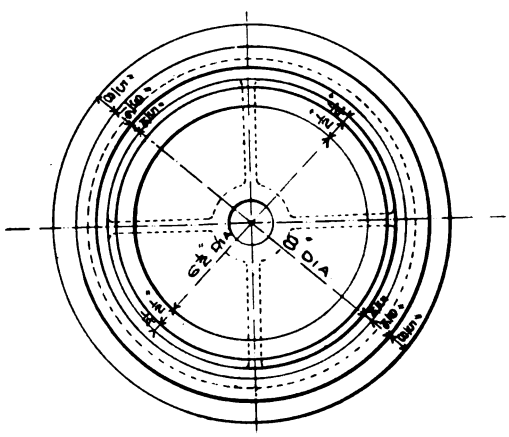

PLAN ON VALVE SEAT.

FIG. 335.

FIGS. 334 AND 335.—EXTERNAL EQUILIBRIUM VALVE.

FIG. 336.

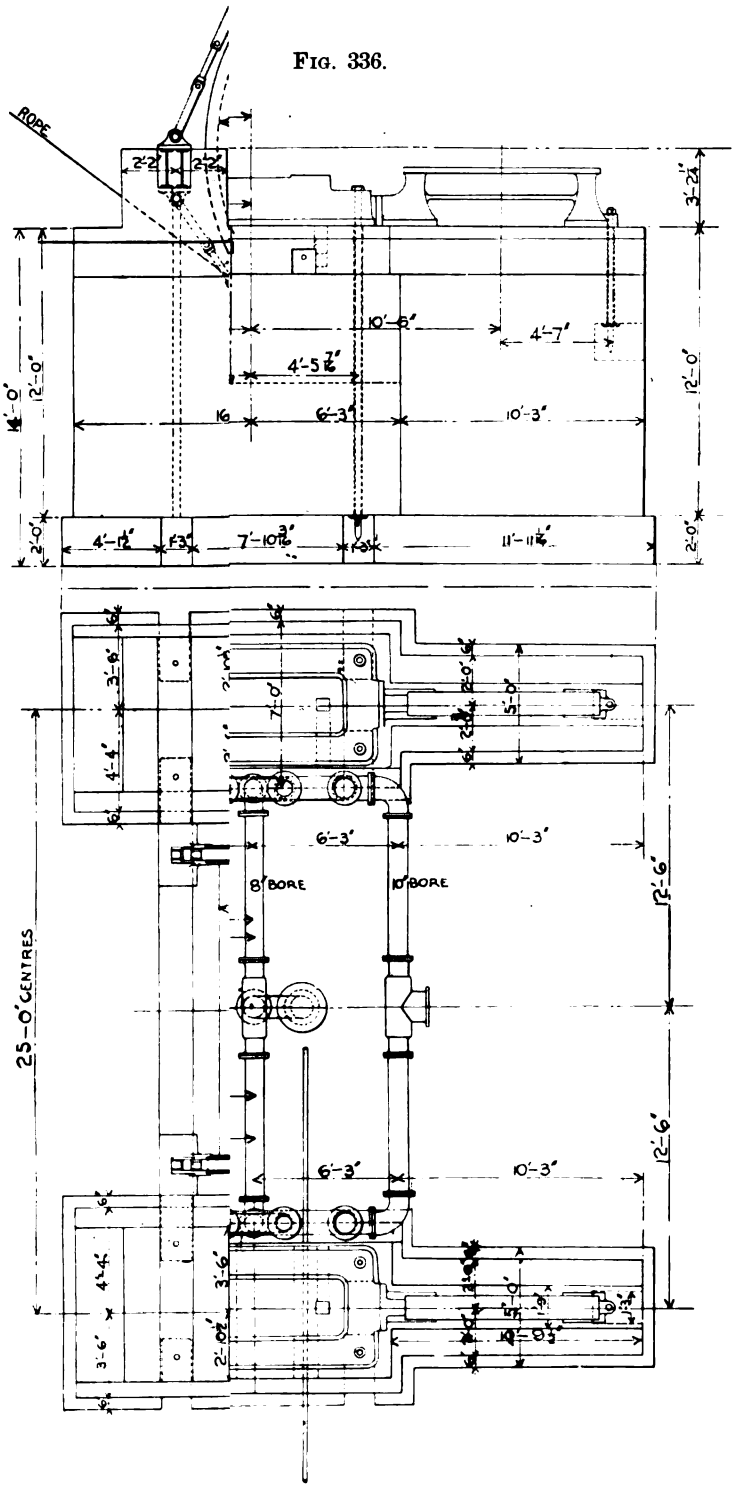
ROPE
2'-2"
2'-2"
3'-2½"
12'-0"
14'-0"
2'-0"
10'-6"
4'-7"
4'-5 7/16"
16
6'-3"
10'-3"
12'-0"
2'-0"
4'-1½"
1'-3"
7'-10 3/16"
1'-1½"
11'-11½"
3'-6"
4'-4"
7'-0"
2'-0"
5'-0"
6'-3"
10'-3"
8" BORE
10" BORE
12'-6"
25'-0" CENTRES
6'-3"
10'-3"
12'-6"
3'-6"
4'-4"
3'-6"
2'-0"
5'-0"

the weight of the drum and crank shaft resting on the bearings is considerably more than the pull on the ropes, there is no necessity to depart from the simpler and much more suitable square form. The bearings by Messrs. Barclay are of the square form of massive design, as shown in figs. 350 to 354, and are both bolted and keyed between snugs to the sole-plate, the base of the bearing and the seat on the sole-plate both being machined. The steps are of gunmetal, very heavy and made in four parts, the side or end steps being provided with steel side wedges ground and hardened for accurate adjustment when taking up the wear, in the directions of the pull and thrust of the engine.

FIG. 338. FIG. 339.

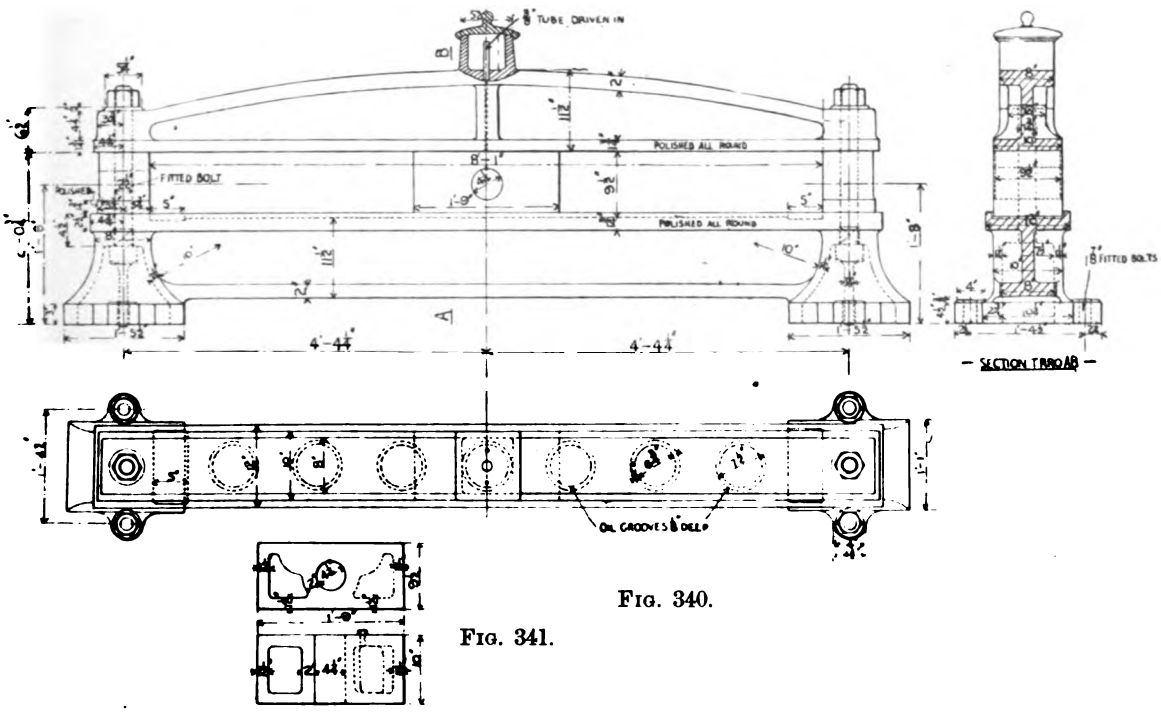

FIG. 340.

FIG. 341.

FIGS. 338 TO 341.—HYLTON WINDING ENGINES—MAIN GUIDE BARS.

The connecting rods, shown in figs. 356 to 359, are of best forged mild steel, 15 ft. long between centres, or two and a-half times the length of stroke —which is a good proportion—and are turned and polished. The journal at the crosshead is 7½ in. diameter by 9½ in. long, and the crank pin journal is 8¼ in. by 10 in. long.

The piston rods are of best forged medium hard steel, 6¼ in. diameter at the front end and 4½ in. at the back end. The utility of the tail piston rod is to be questioned, and probably the balance of argument is in favour of their being

dispensed with. At the tail end there is provided a slide block, supported and moving on a back slide, shown in figs. 360 to 362, which is bolted to the engine sole plate. The piston rods are fitted with Mr. A. A. Rickaby's metallic packing, shown in fig. 363. This consists of several layers of anti-friction metal of V-shaped section, in segments, which incline alternately from and to the rod, so that when the gland is screwed up, the inner rings are pressed against the rod. Two turns of soft packing are placed on top of the brass ring as shown, to give the necessary elasticity in adjusting the packing. It may be noted here that much of the trouble with leaky piston rod glands is due to the bushes in cylinder cover and gland, and the space for the packing being too short.

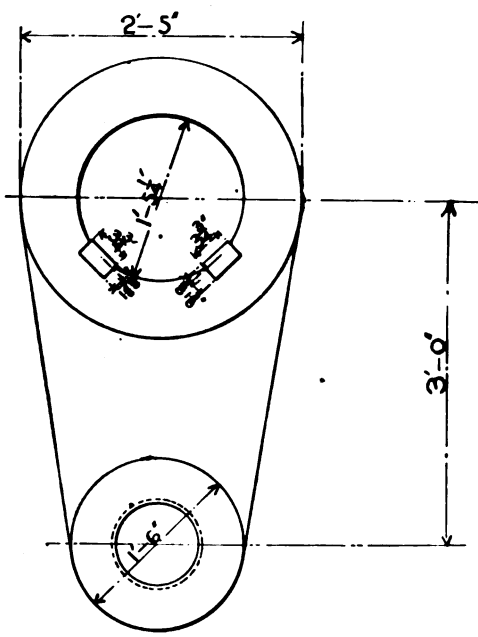

FIG. 348.

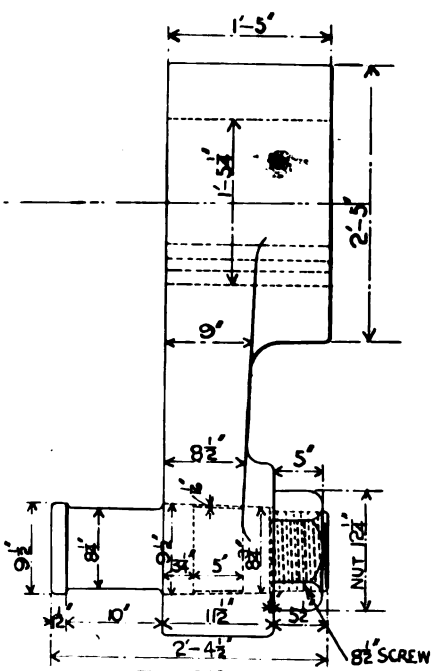

FIG. 349.

FIGS. 348 AND 349.—HYLTON WINDING ENGINES—CRANK.

The main guide bars of cast iron, which are shown in figs. 338 to 341, are of wide trough section, and the slide blocks have large bearing surfaces, each being 21 in. long by 10 in. wide.

The winding drum, shown in figs. 364 and 365 (Plate XX.), is cylindrical, 20 ft. diameter on cleading by 12 ft. wide between cheeks. The cheeks are of cast iron, and a central stiffening ring is provided. Each cheek has a brake path, and is fitted with top and bottom brake straps, encircling practically the whole path. The

FIG. 342.

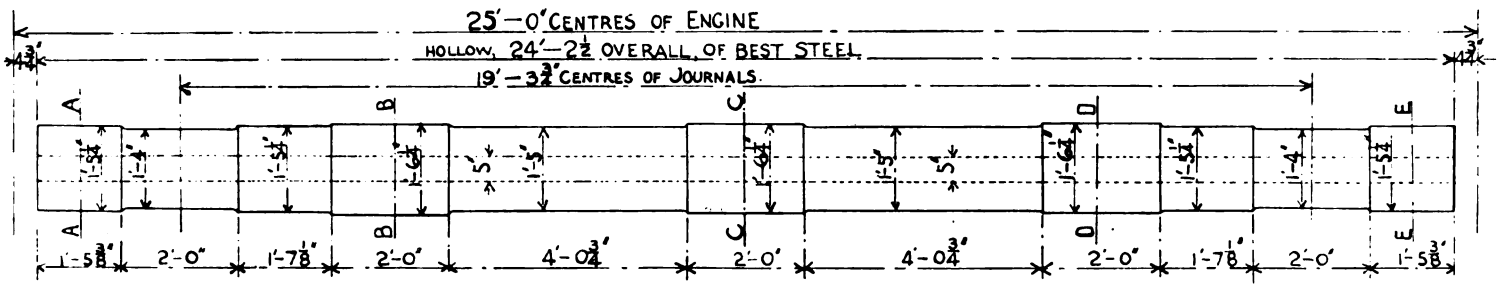

SECTION AT AA

FIG. 343.

SECTION AT BB

FIG. 344.

SECTION AT CC

FIG. 345.

SECTION AT DD

FIG. 346.

SECTION AT EE

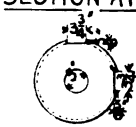

FIG. 347.

FIGS. 342 TO 347.—HYLTON WINDING ENGINES—CRANK SHAFT (*see* page 168).

FIG. 350.

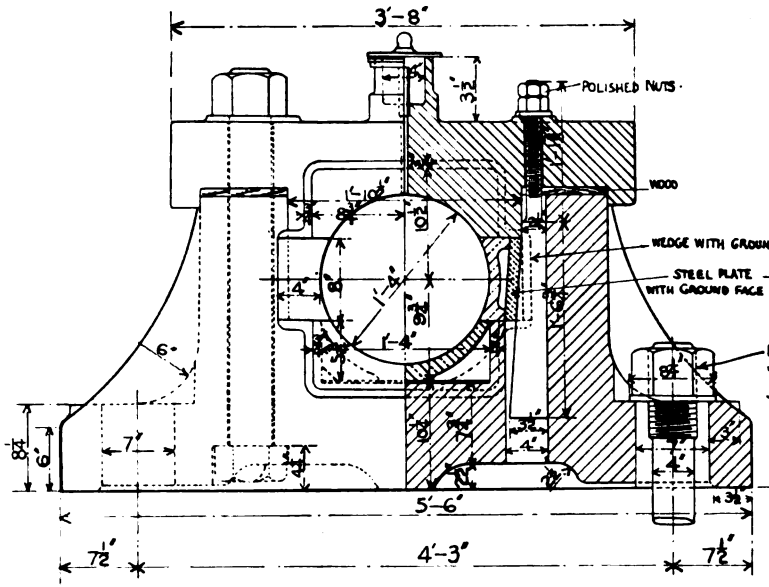

FIG. 351.

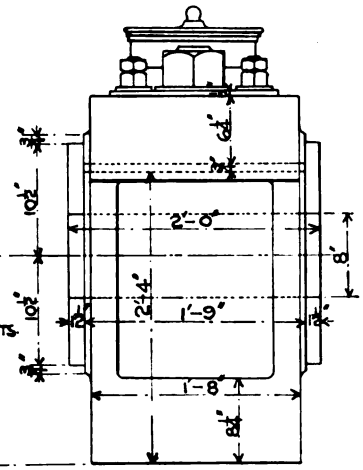

FIG. 352.

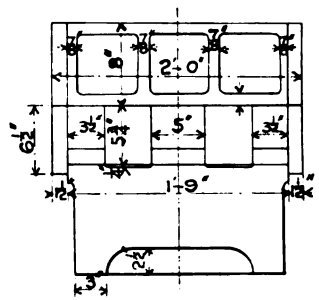

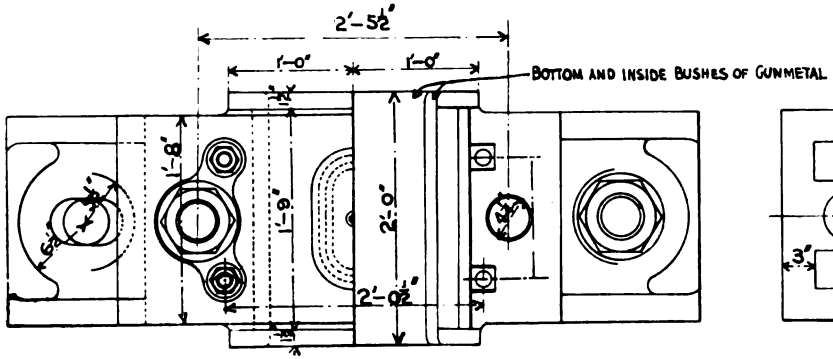

FIG. 353.

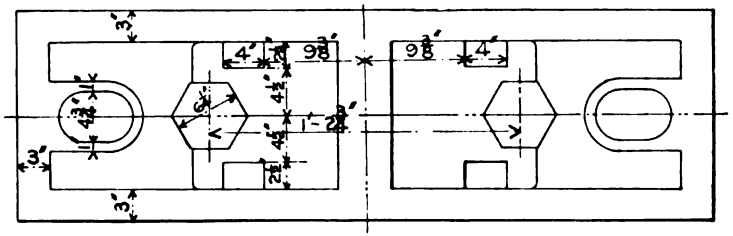

FIG. 354.

FIGS. 350 TO 354.—HYLTON WINDING ENGINES—MAIN BEARING (*see* page 169).

cleading is of ⅝ in. steel plate with a covering of oak 7 in. thick, which is turned in position. The cheeks and internal ring are in halves, securely bolted together with turned and fitted bolts.

The eccentric sheaves and straps are of cast iron, and shown in figs. 366 to 369 (*see* page 176). The sheaves are solid, and consequently have to be fitted on the shaft before the cranks are shrunk on, which is probably a better way than by making the sheaves in halves, owing to the difficulty in making the latter thoroughly secure. The straps are bolted together by a long bolt brought close to the sheave, thus making a strong joint instead, as is often the case, of making the straps with short lugs, and

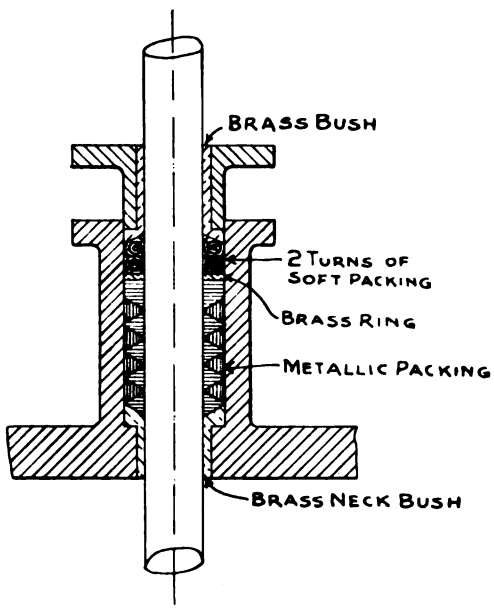

FIG. 363 (*see* page 170).

the bolt at some distance from the sheave, which results very often in the breaking off of the lugs. The eccentric rods, of mild steel, are shown in figs. 370 to 373 (*see* page 176).

The engines are controlled by Messrs. Andrew Barclay, Son and Co.'s steam reversing gear, which is shown in figs. 374 and 375 (Plate XXI.) It consists of a steam cylinder S, and an oil cataract cylinder C, with steam and oil valves S V and C V respectively. By means of the handle H and rods R and V R, the valves are put in motion, but as soon as the connecting rod C R rotates the reversing weight shaft W S, the quadrant Q is rotated, and through the floating quadrant F Q it readjusts and controls the valves through their common valve-rod V R, and consequently

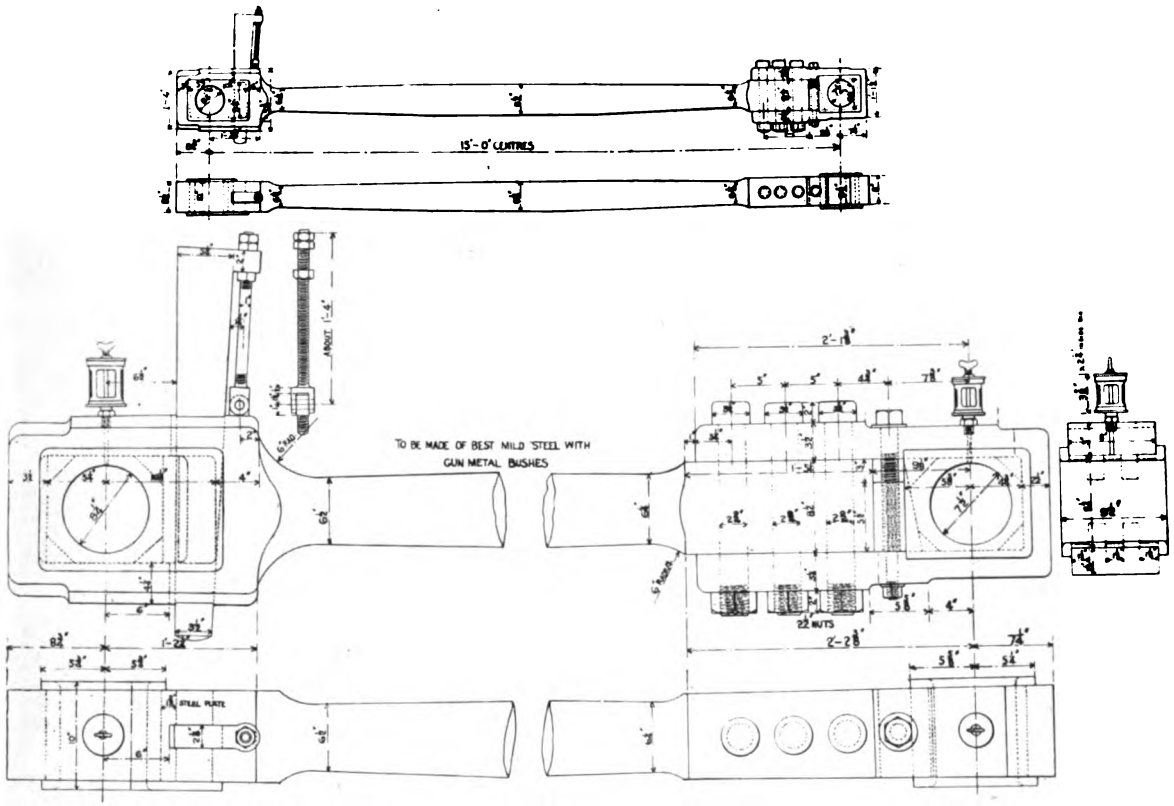

FIGS. 356 TO 359.—HYLTON WINDING ENGINES—CONNECTING RODS (*see* page 169).

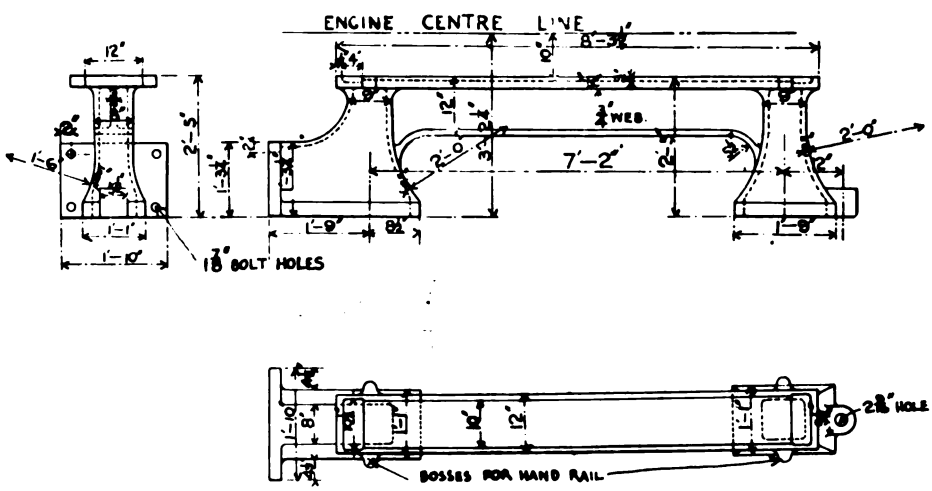

FIGS. 360 TO 362.—HYLTON WINDING ENGINES—TAIL PISTON ROD GUIDE BAR (*see* page 170).

stops the gear and therefore the reversing radius rod and block working in the link, positively at any required point as determined by the handle H. The handles for operating the main steam valve drain cocks, and steam brake, and pedal for the foot brake, are all neatly and handily arranged as shown.

Fig. 376 shows Messrs. Barclay's automatic cut-off gear as fitted to these engines, and the Cornish valves. As will be seen, each valve chest contains two valves, one 8 in diameter for steam admission, and one situated lower down 9 in. diameter for exhaust eduction, their spindles working through stuffing-boxes in the covers. On top of the chests are mounted the polished wrought iron pillars and guide rails, also the columns carrying the rocking shaft, cams, levers, &c. The rocking shafts are actuated by eccentrics from the crank shaft, through the reversing gear as ordinarily arranged ; the reversing gear in this case being of the Allan straight link type. The important parts of this gear are in connection with the apparatus for shutting off the admission of steam to the cylinder, and also in the smartness with which the steam is exhausted after it has done its work in the cylinder. In very many engines this latter point has not been sufficiently recognised, and in some cases the exhaust valves have been made the same size as the steam valves, with the result that the exhaust is throttled, and part of the power of the engine is wasted in having to drive out the exhaust. Such is the case in the indicator diagram shown previously in fig. 314; consequently the exhaust valves and pipes should be large in diameter. Returning to fig. 376, it will be seen the steam valve is actuated by the eccentrics through the rod R, which rocks the arm A, the points of which lift, through the bent lever L and the valve lever L^1, the spindle P. On the lever L^1 there is mounted a wedge W, which is pushed out or drawn in by the action of the governor through the road M. The position of this wedge W determines the position of the toe T of the lever L, and therefore determines at what point in the lifting of P the point S shall pass T and allow the levers L and L^1 and therefore P to drop and thus close the valve. The position of the wedge being determined by the governor, and the governor being regulated by the speed of the engine, it follows that full steam will be admitted at first; but as the engine increases in speed the steam will be gradually cut off, and the quantity of steam admitted thus decreases with each stroke, and the ratio of expansion is increased.

In connection with the exhaust valve there is a projection E on the cam or arm which gears with a suitable projection on the lifting lever L^2, and the wedge action on the upper face of E together with its lifting action gives a very rapid lift to L^2. The exhaust valve is therefore—as it ought to be—lifted quickly, and is held full open until nearly the end of the stroke, when it is allowed to close, thus giving the necessary compression at the end of the stroke.

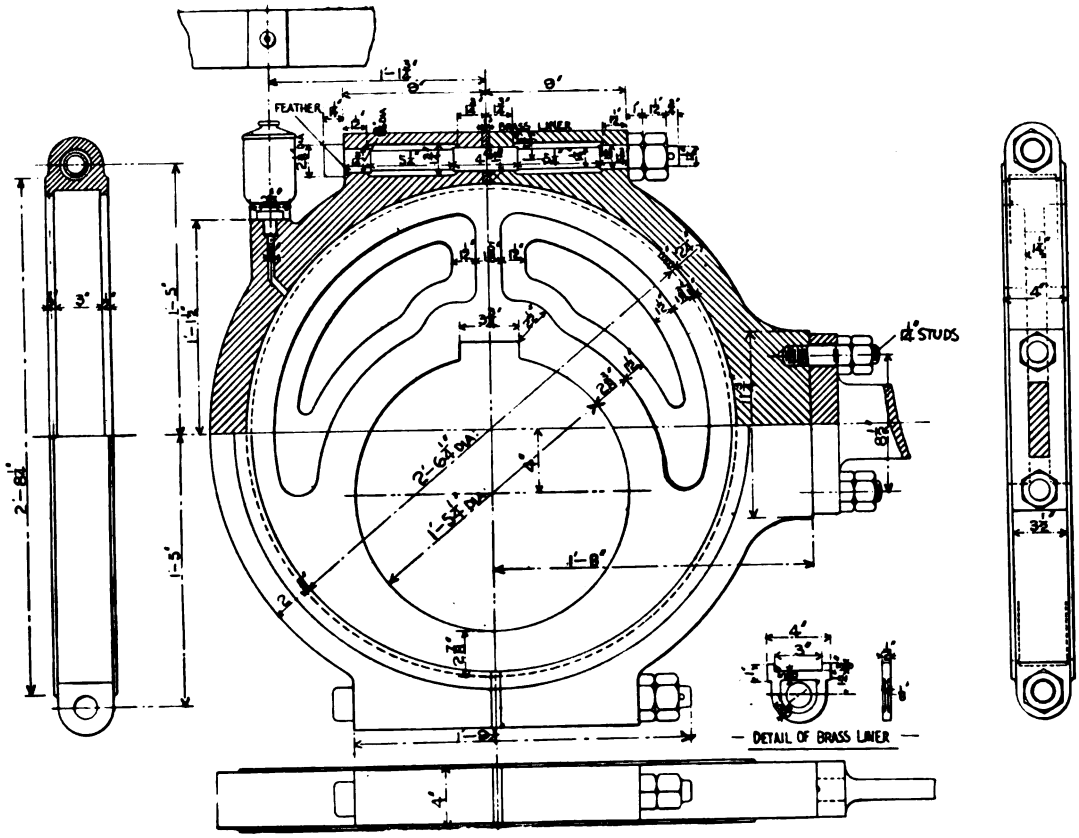

FIGS. 366 TO 369.—HYLTON WINDING ENGINES—ECCENTRIC SHEAVES AND STRAPS.

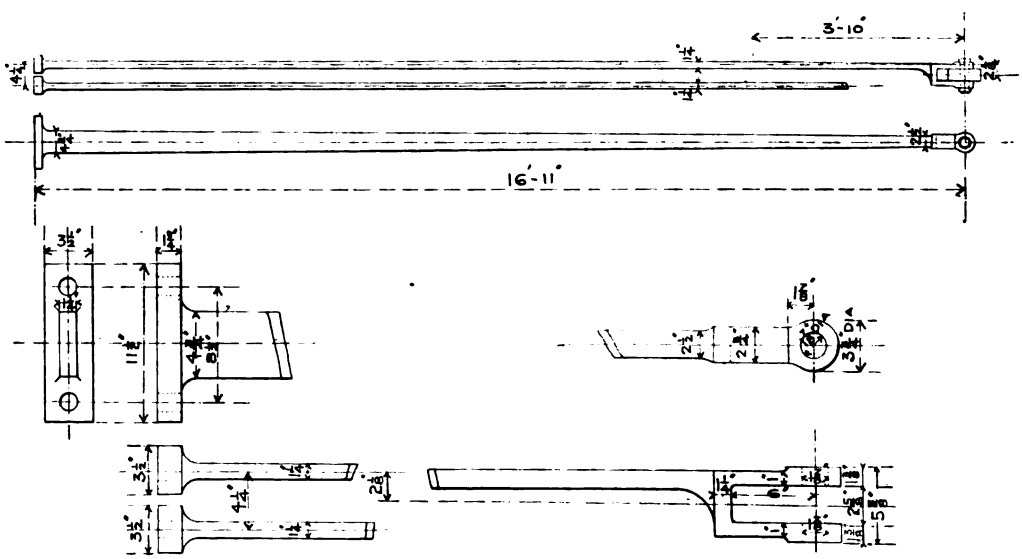

FIGS. 370 TO 373.—HYLTON WINDING ENGINES—ECCENTRIC RODS.

PLATE XX.—(*To face page 176*).

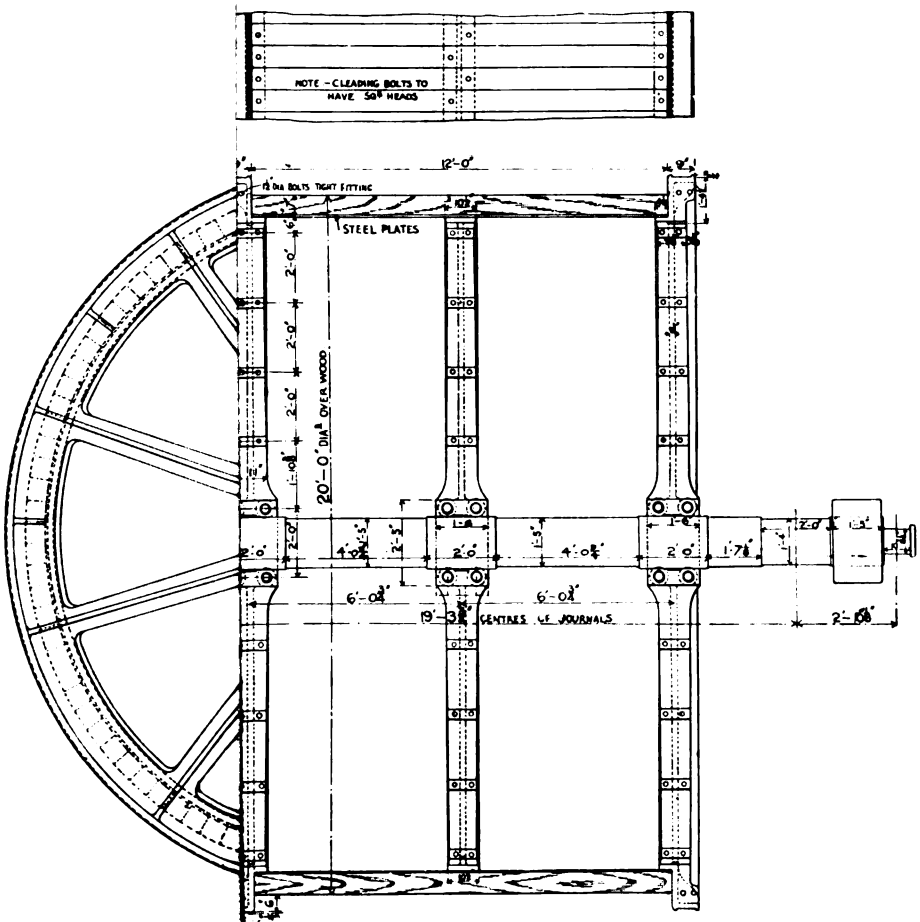

FIG. 365.

ES.—DRUM.

PLATE

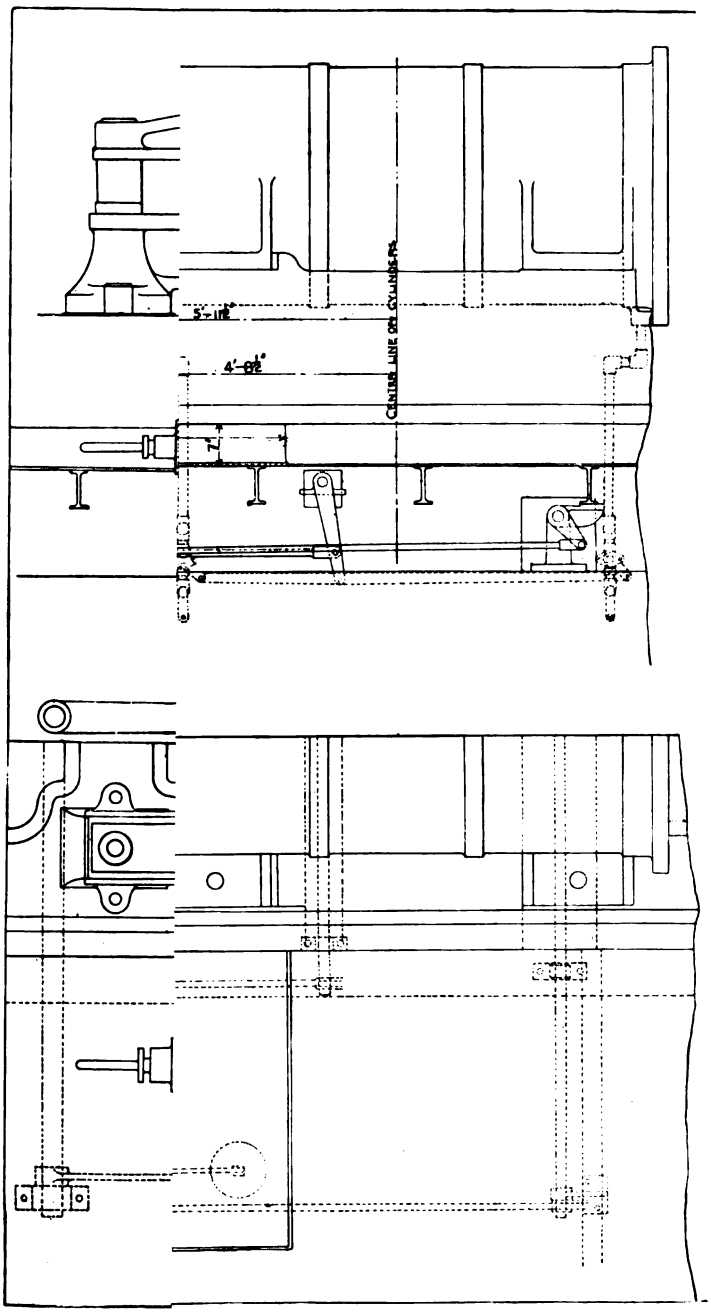

G GEAR.

Figs. 377 to 382 are indicator diagrams taken from the No. 2 pair of engines. The freedom of the exhaust is clearly shown, there being practically no more back pressure when the engines are running at full speed as when starting the load.

To prevent the steam valves from damaging their faces when they are free to drop, an air-cushioning cylinder or dash-pot fitted with a piston is mounted on each spindle above the crossbar. On the up stroke the piston draws in air which on the

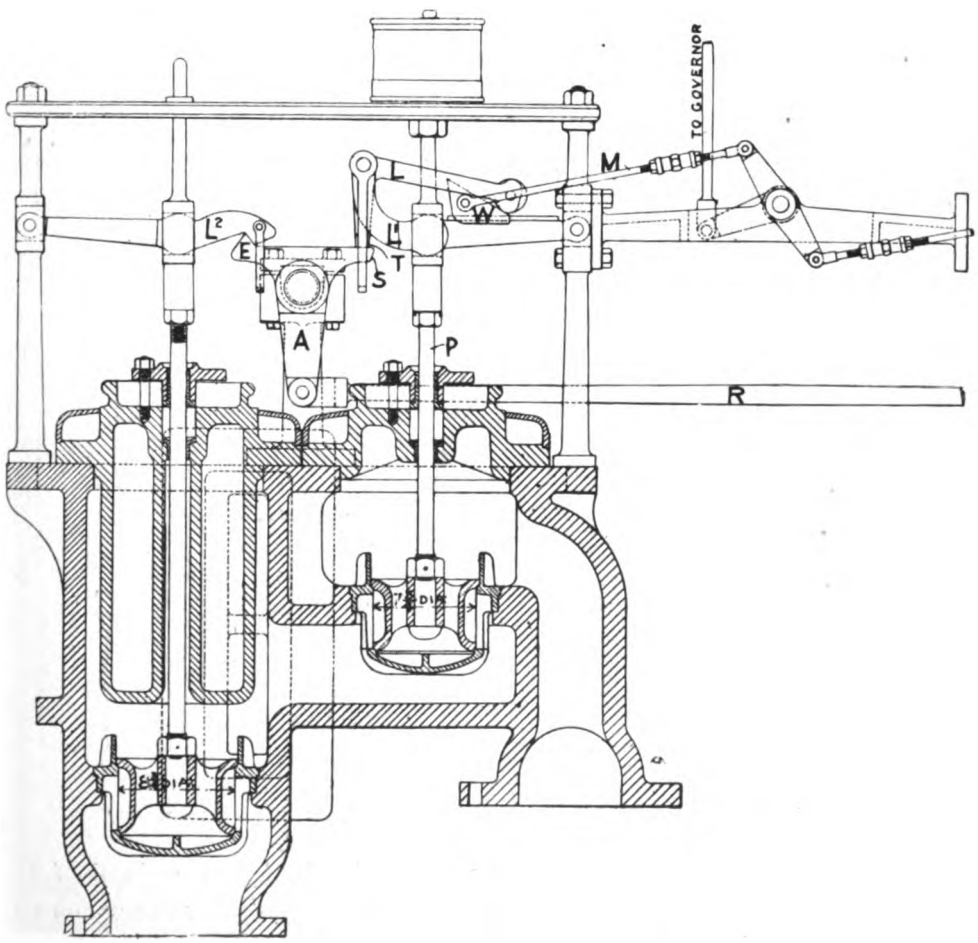

FIG. 376.—HYLTON WINDING ENGINES—VALVE GEAR.

down stroke forms a cushion, and while lessening the blow of the valve on its seat, does not prevent to any appreciable extent its prompt closing.

The governor is of the ordinary type, arranged with a cushioning cylinder to prevent the weight of the balls, arms, &c., from falling heavily when the engine is stopped quickly. The governor is driven by bevel spur gearing from the crank

shaft of the engine, and the sleeve in the governor is coupled to the wedges on the steam lever through the shafts, levers, links and pins to the correct position to automatically adjust the wedges. The gear is remarkable for its simplicity and few working parts—a point of considerable importance in winding engines. Fig. 383 is from a photograph of the governor and valve gear.

The brake consists of two straps arranged above and below the drum, and fig. 384 shows the method of supporting the top strap with springs suspended from

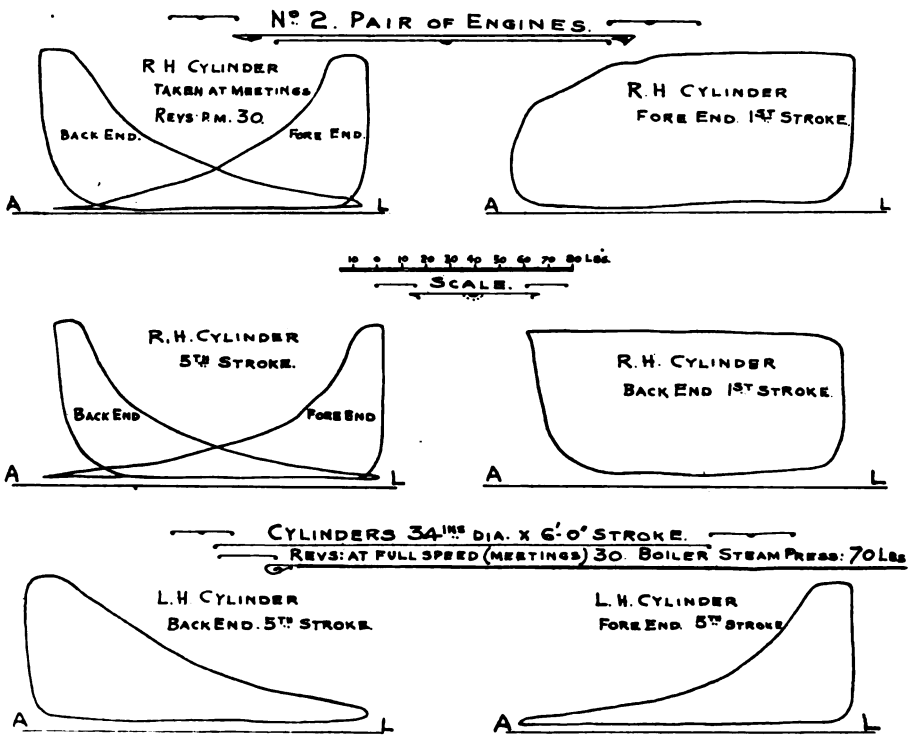

Figs. 377 to 382.—Hylton Winding Engines—Indicator Diagrams.

a T bar bent to a circular form; to these T bars is also fixed the cleading in front of the drum, which prevents the oil and grease from the ropes being thrown on the engine-house floor.

Figs. 385 and 386 show in elevation and plan respectively, the general arrangement of the winding engines, which generally are of good proportions and well designed, and have given the utmost satisfaction to the owners in working.

Another type of winding engine by Messrs. A. Barclay, Sons and Co. Limited is shown in figs. 387 to 389 (Plate XXII.) These engines have cylinders 25 in. diameter by 4 ft. stroke, and trunk guides, but with the sole plates nearly from the pedestal

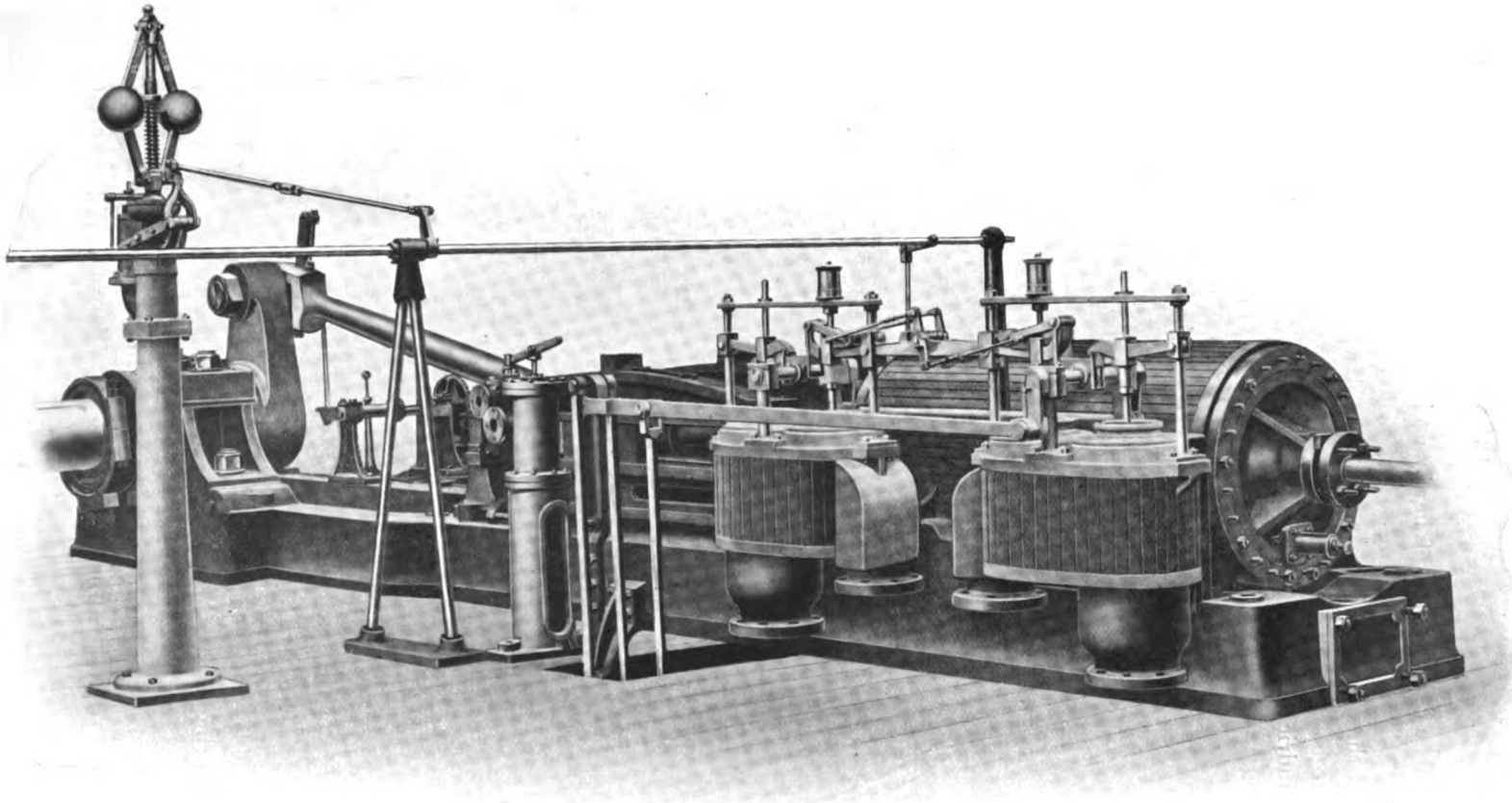

FIG. 383.—HYLTON WINDING ENGINES—VALVE GEAR.

to cylinder. The cylinders are of hard cast iron, and fitted with cast iron pistons, with simple cast iron packing rings. The piston rods are of best forged steel, 4 in. diameter, and the crossheads of cast steel fitted with adjustable cast iron shoes or slippers of large area. The connecting rods and shaft are of best forged iron. The drum is cylindrical, 10 ft. diameter by 6 ft. 6 in. wide between the cheeks, both cheeks having a turned brake path. The drum cleading is of $\frac{3}{8}$ in. mild steel plates

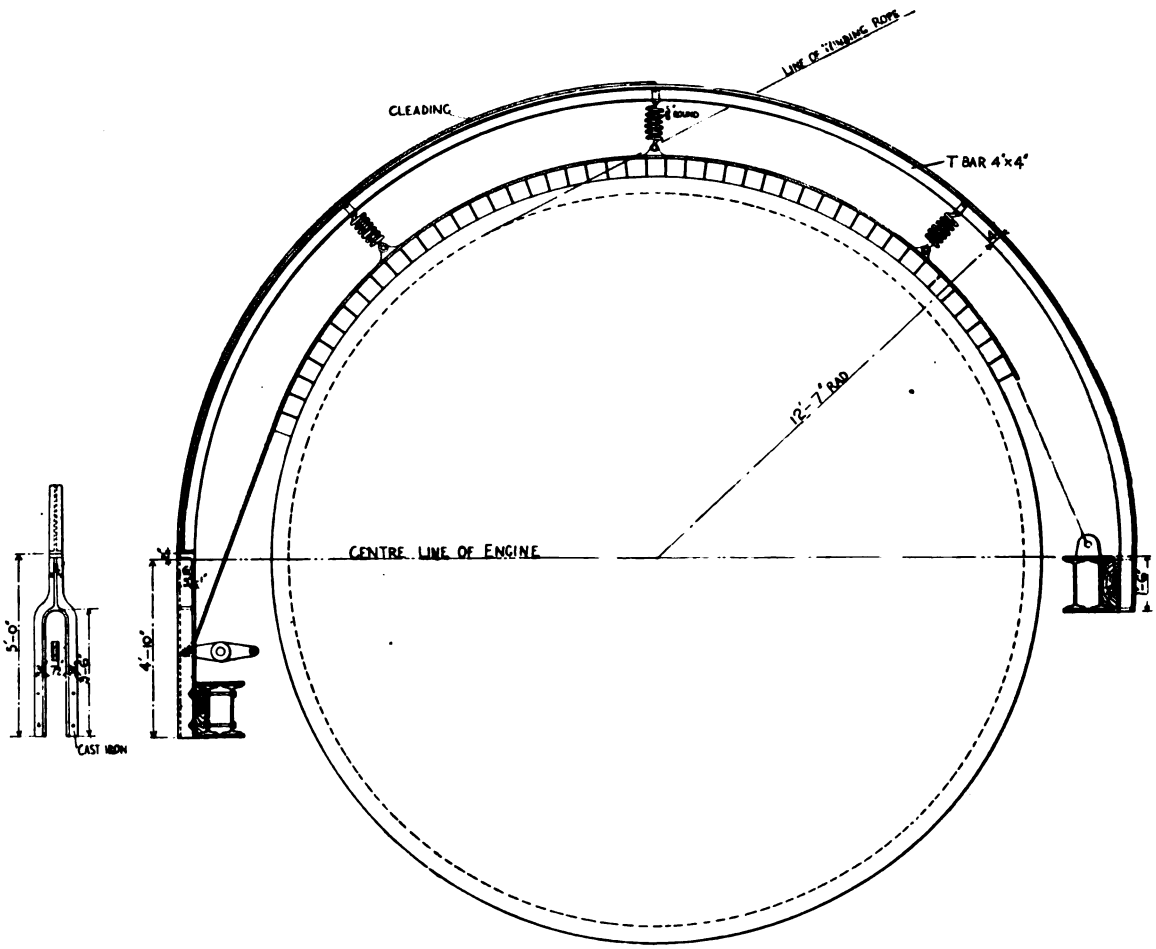

FIG. 384.—HYLTON WINDING ENGINES.—METHOD OF SUPPORTING TOP BRAKE STRAP.

secured by $\frac{3}{4}$ in. bolts and nuts, and stiffened with a central cast iron stiffening ring. The valve gearing is of the Stephenson link-motion reversing type worked by eccentrics from the crank shaft, and the slide valves have a "Barclay" balancing cylinder, shown in figs. 390 and 391, placed in the cover of the steam chest. All the working parts of the valve gearing of Messrs. Barclay's engines are thoroughly

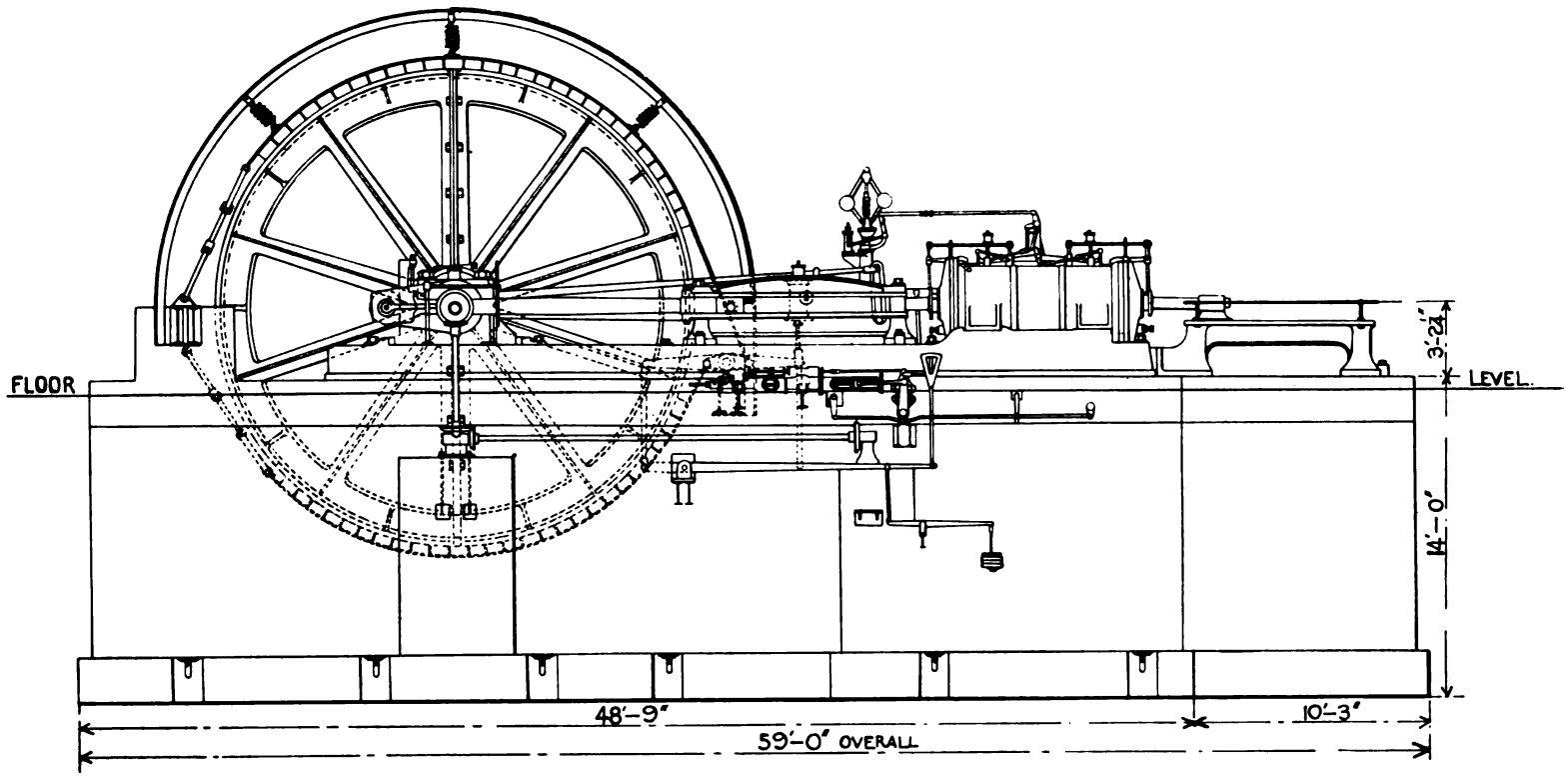

FIG. 385.—HYLTON WINDING ENGINES. GENERAL ARRANGEMENT—ELEVATION (*see* page 178).

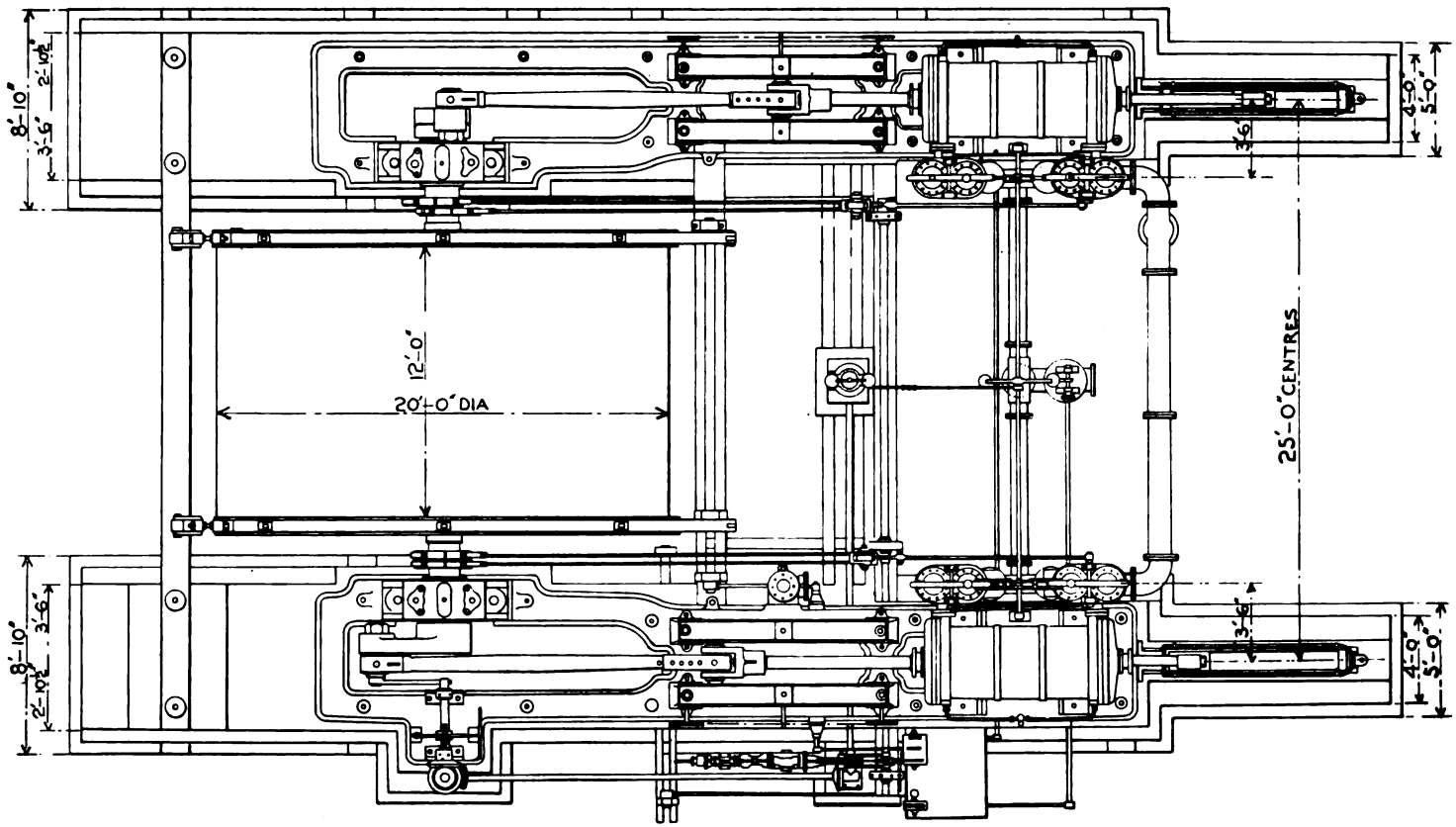

FIG. 386.—HYLTON WINDING ENGINES. GENERAL ARRANGEMENT—PLAN. (*see* page 178).

PLATE XXII.—(*To face page 182*).

FIG. 388.

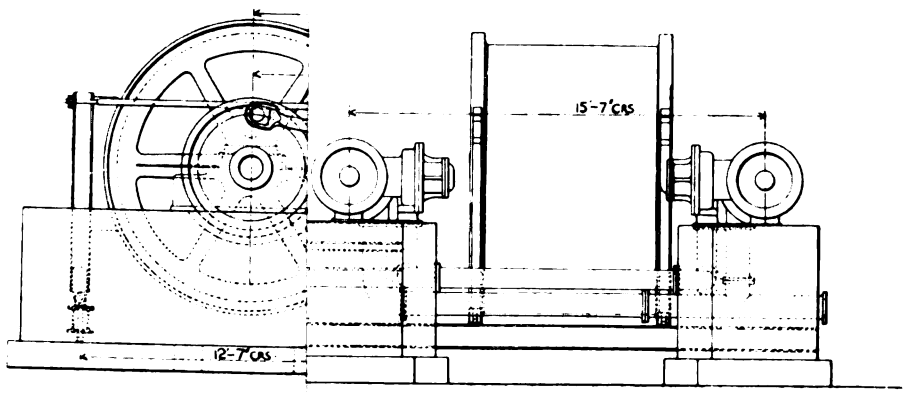

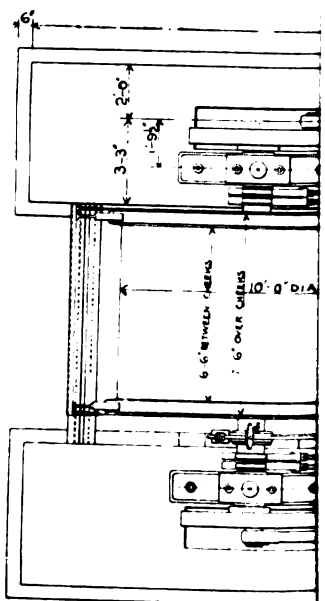

FIGS. 387 TO 389.—BARCL

FIG. 394A.—BARCLAY WINDING DRUM DURING CONSTRUCTION (*see* page 183).

PLATE XXII

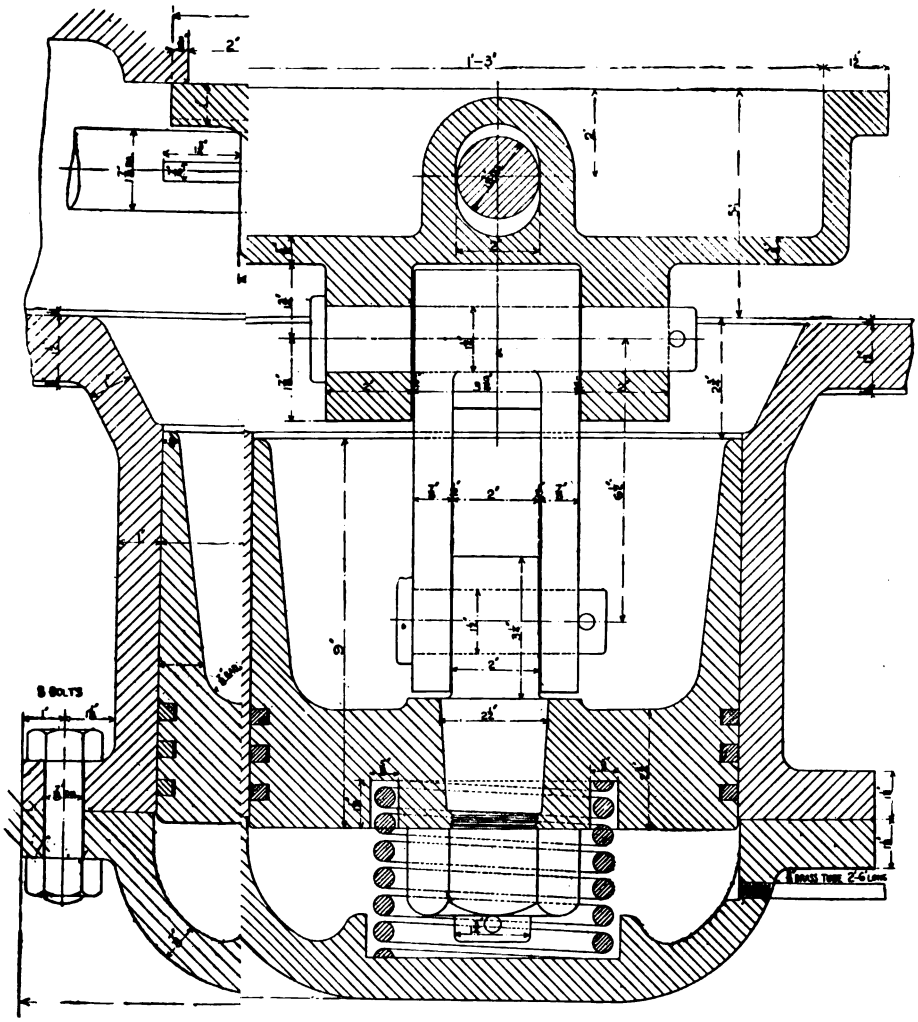

FIG. 391.

SLIDE VALVE.

case-hardened in bones. Case-hardening is often inefficiently done, and to do this in a furnace with carbonaceous material like bones is important. The engines are provided with a foot brake, with a multiplying power of about 25 to 1, so that a man is able to apply a pressure of about 1,400 lb. to each of the four post brakes, which gives a pressure of about 4¾ lb. per square inch on each of the sough wood brake blocks.

The steam regulator is of the slide-valve type, and all the handles are placed conveniently to the engineman. The steam pressure is 120 lb. per square inch, but the engines are very easily handled owing to the slide valves being balanced, and have been satisfactorily working for a number of years.

The balancing of the slide valve is effected very simply, as shown in figs. 390 and 391. As will be seen, this consists of a cylinder cast on to the steam chest cover, fitted with a piston which is long, and therefore steady in its action. This piston is connected by the link to the back of the slide valve, and has always the same steam pressure per square inch acting on its area as the slide valve, and is so proportioned as to relieve the load, and therefore the friction on the valve face, without any risk of the valve being lifted off the face. The pins in the connecting link are long and have large wearing surfaces. An important element in securing continued efficiency of the balancing piston is that it moves slightly up and down in the cylinder with every stroke of the engine, and there is no tendency to stick.

There are many devices for balancing slide valves, mostly unsatisfactory, and even this arrangement depends upon the balancing piston being kept steam-tight. It is, however, simple in construction, has large wearing surfaces, and is probably the most satisfactory method of balancing a slide valve.

Another drum by Messrs. Barclay and Co. is shown in figs. 392, 393 and 394. The drum is of cast iron, 18 ft. diameter by 7 ft. 6 in. wide between the outer cheeks, and there is a stiffening ring in the centre. Each cheek and stiffening ring is in halves, bolted together, and further secured at the nave by oval wrought iron hoops shrunk on to oval bosses, which are cast on for this purpose. The cleading is of oak, without steel plate lagging, the oak being 8 in. thick, secured by ¾ in. bolts and nuts. Its weight, including the cleading but without the crank shaft, is about 23 tons.

A photograph of the Barclay winding drum is shown in fig. 394A; this photograph was taken during construction.

A powerful winding engine by Messrs. Markham and Co. is shown in figs. 395 and 396. The cylinders are 42 in. diameter by 7 ft. stroke, the drum being 20 ft. diameter and 12 ft. wide. The drum is constructed with steel bosses and cast iron rims, the latter being in six segments, with steel arms of channel section. By this

FIG. 392.

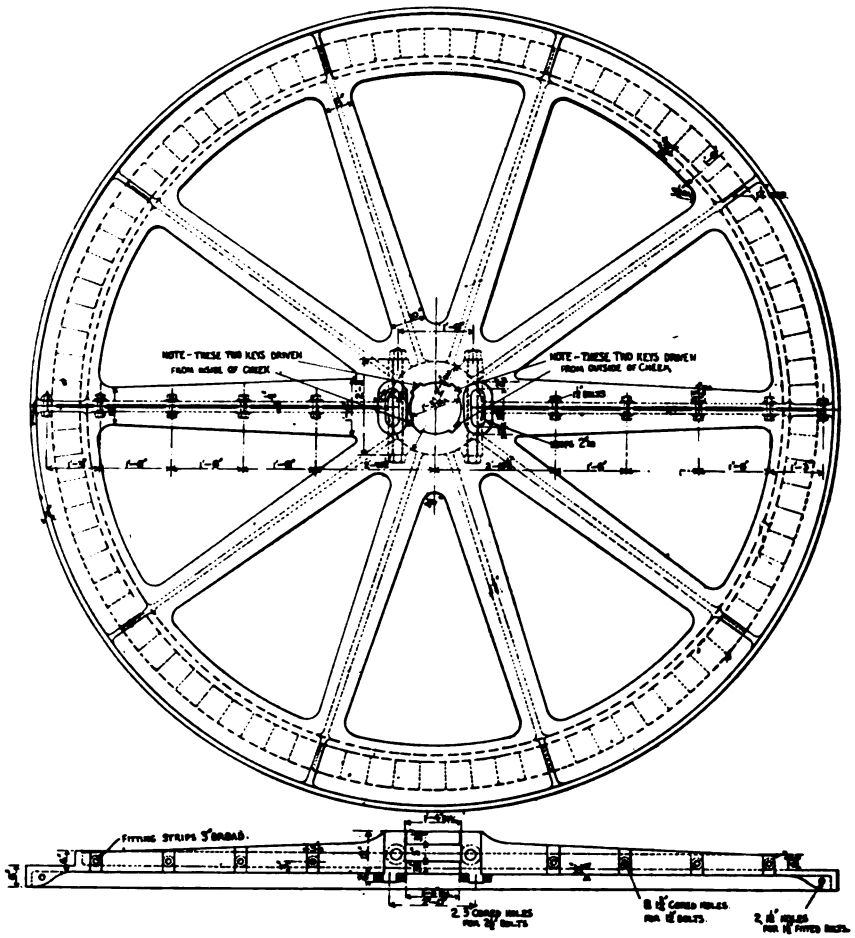

FIG. 393.

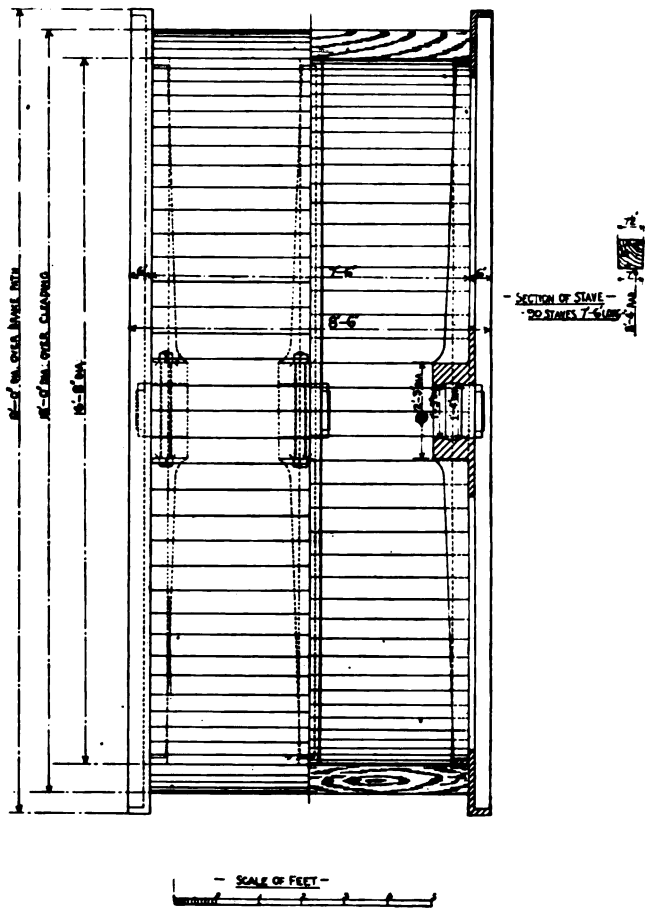

FIG. 394.

FIGS. 392 TO 394.—WINDING DRUM BY MESSRS. A. BARCLAY, SONS AND CO. LIMITED.

PLATE XXIV.—(*To face page 184*)

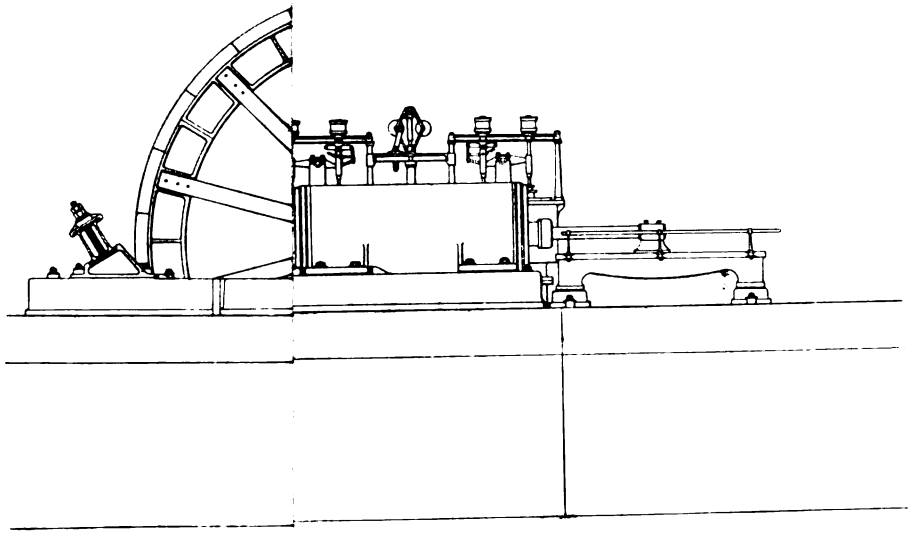

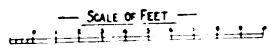

HAM AND CO.

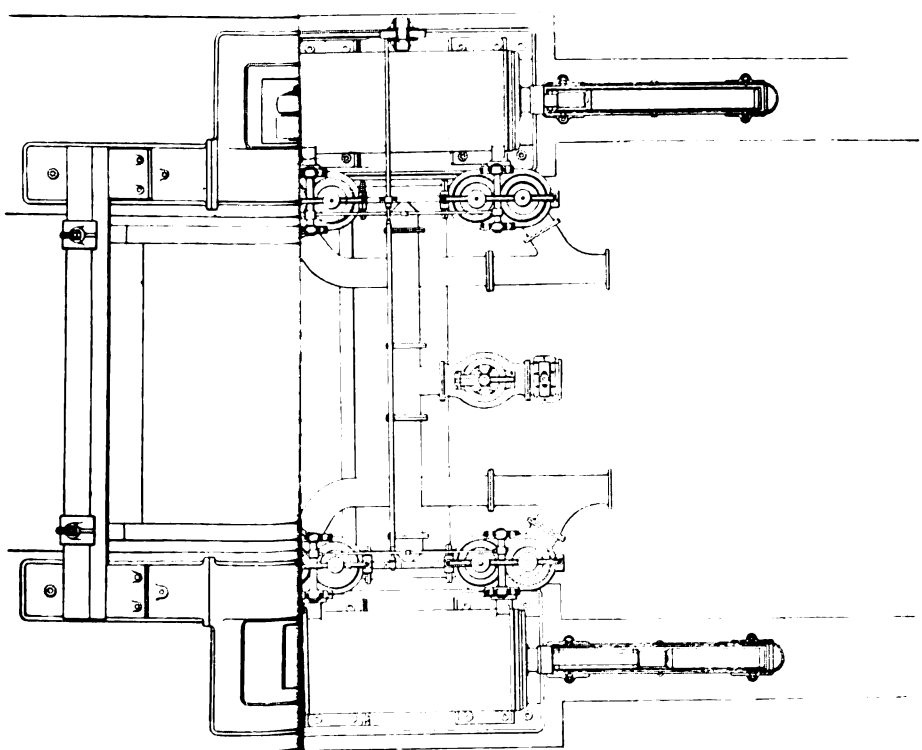

D CO. (*see* page 183).

PLATE XXV.

FIG. 399.

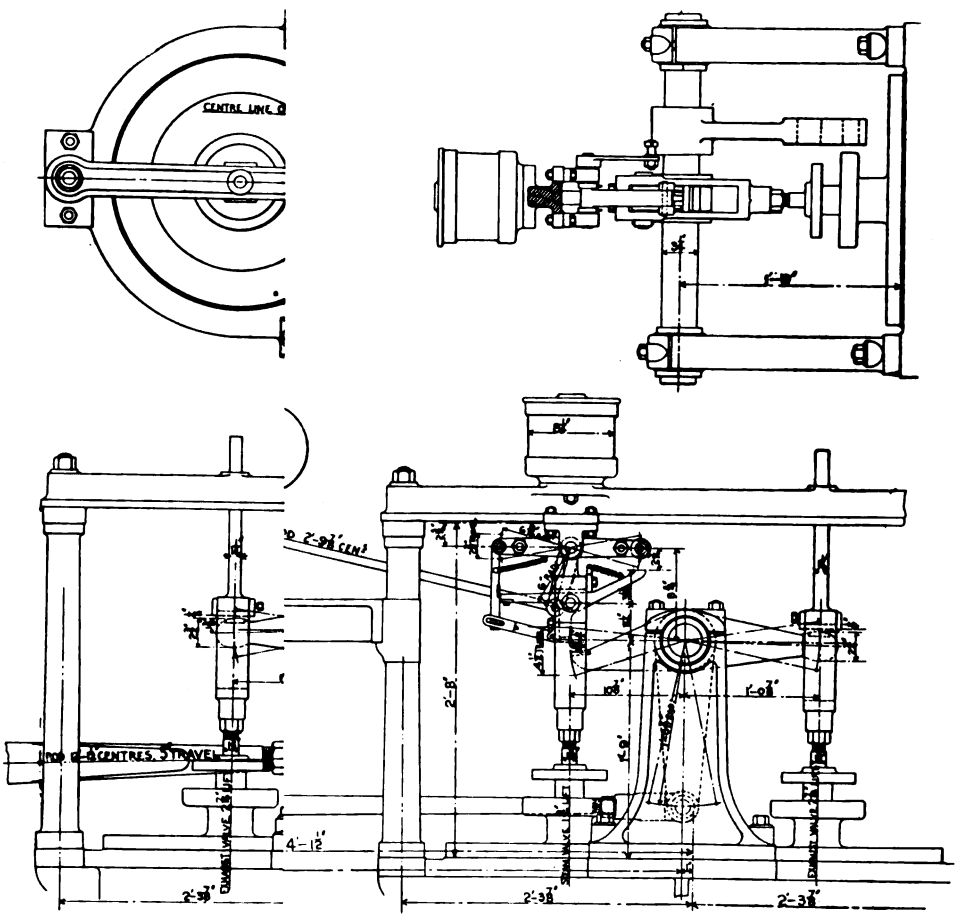

RANGE TRIP GEAR.

style of built-up drum, advantage in point of weight is gained over the ordinary cast iron drum. The brake consists of a wrought iron strap on the under side of the drum, acting on wood cleading bolted to the rim of drum, and may be worked by either steam or foot. The engine is fitted with automatic cut-off gear and Cornish valves, and steam reversing gear.

The automatic cut-off gear consists of Messrs. Markham's "long-range" trip gear, and is shown in figs. 397, 398, and 399. The object of this gear is to obtain a wider range of the point of cut-off than can be obtained in ordinary Corliss or drop valve gears, in which both the steam and exhaust valves receive their motion from the same eccentrics, and where the trip can only be effected on the *opening* stroke of the valve, unless some auxiliary eccentric is employed, or the motion of some part of the engine is utilised for the same purpose. This gear trips on the downward or *closing* stroke of the valve as well as the upward or opening stroke, and has a range of cut-off from zero to 90 per cent. of the stroke, and is, in the case of engines having Cornish or drop valves, arranged as shown. On referring to the accompanying illustration, fig. 397, it will be noticed that the gear, in the main, is similar to the ordinary type of drop valve gear; the actuating lever being keyed on a rocking shaft, which is driven from the eccentrics by means of the usual reversing link and radius rod, lifts and lowers the steam and exhaust valves alternately, thus admitting or exhausting steam as the case may be. The exhaust valve is not affected by the trip gear, but the following description of its action on the steam valve will be interesting.

As shown in fig. 397, the steam valve spindle is coupled to the usual bridle, which is guided at the top by a dashpot piston, and this bridle carries in it the trip piece or lever, which in this case is double ended, and is held in position by the small spiral spring shown. Above the trip lever swings the double-ended governor lever which receives its motion from the governor, and whose position also depends upon the position of the latter. This lever carries on one end a roller, and on the other end a trip hook, which is held up against the tail end of the trip lever by a small spring. Consequently, if the speed of the engine increases above a certain limit, the governor, rising, depresses the roller end of the governor lever, which the trip lever strikes on its upward movement, and thus releases the trip piece from the actuating lever, allowing the dashpot to close the valve.

It will also be seen that when the roller end is depressed the pendant trip hook is raised high out of the way of the tail end of the trip lever, and does not therefore effect the cut-off on the upward motion of the valve. Should, however, the speed of the engine decrease, thus necessitating a later cut-off, the governor falls to a lower position, and raising the roller end of the governor lever out of the way of the trip lever on the upward stroke, it lowers the pendant trip hook into

position to catch the tail end of the trip lever on the downward part of the motion thus releasing the trip lever from the actuating lever, and allowing the dashpot to close the valve. As the valve closes, the trip lever sliding down the inclined face of the actuating lever throws the trip hook clear of the trip lever by means of the knock-out rod attached thereto, and thus allows the trip lever to return to its original position ready for the next stroke, under the action of the spiral spring.

This tripping on the downward stroke of the valve forms the distinguishing

FIG. 402.

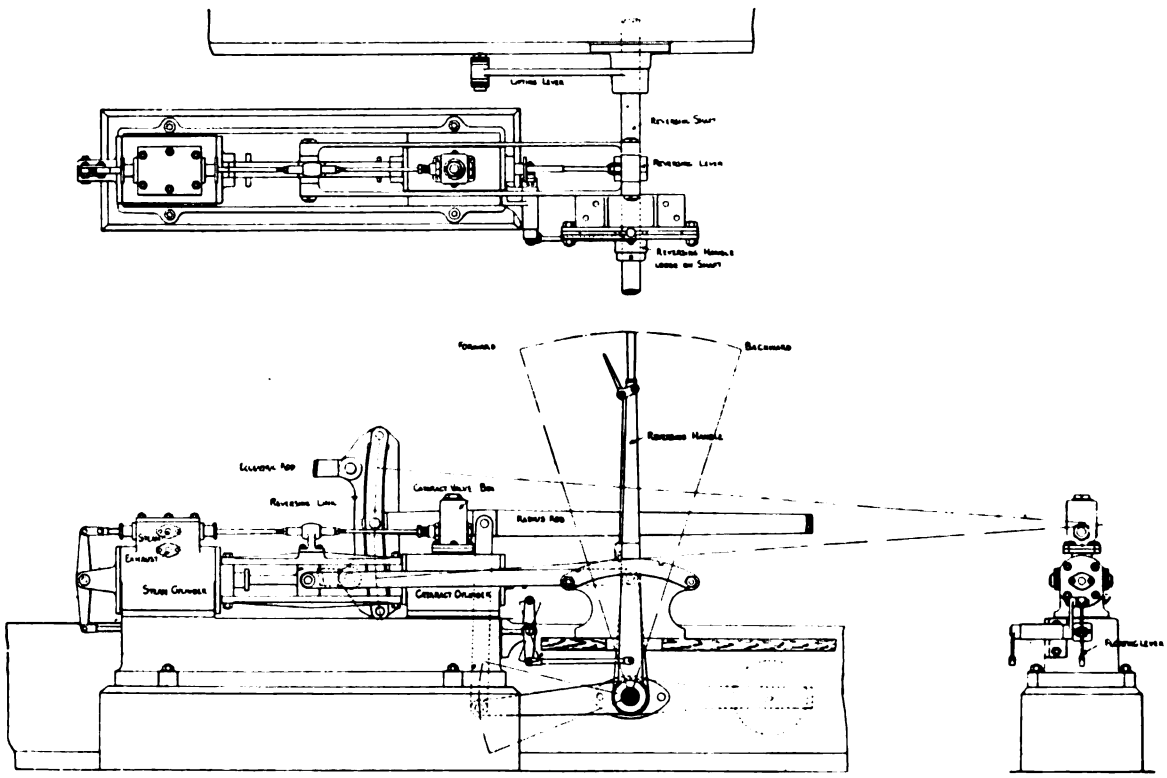

FIG. 400. FIG. 401.

FIGS. 400 TO 402.—MESSRS. MARKHAM'S STEAM REVERSING GEAR.

feature of the gear, as the combination of levers, &c., effecting this end is applicable to other forms of trip gear.

The steam reversing gear consists, as will be seen from the accompanying illustrations, figs. 400, 401 and 402, of a steam cylinder and an oil or cataract cylinder, having their pistons fixed on the same piston rod and their respective valves actuated by means of the same valve rod by suitable coupling rods from the

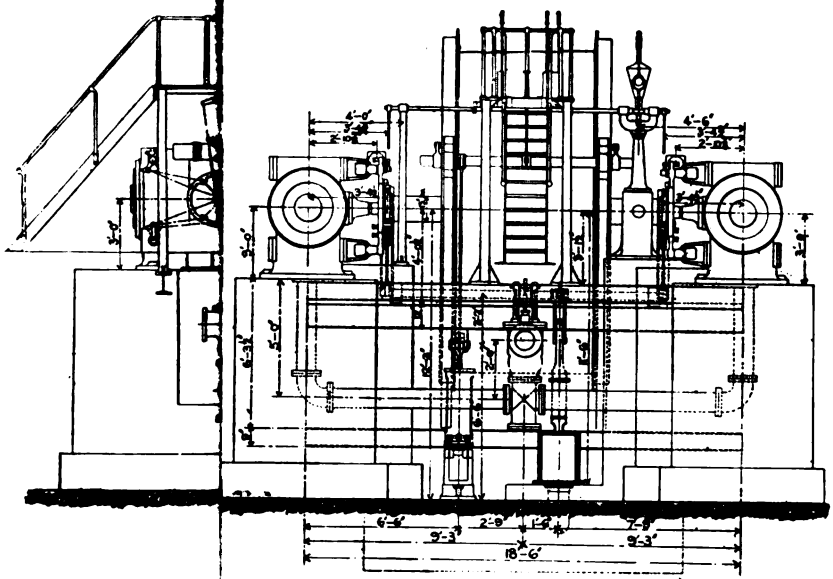

FIG. 404.

GINE.

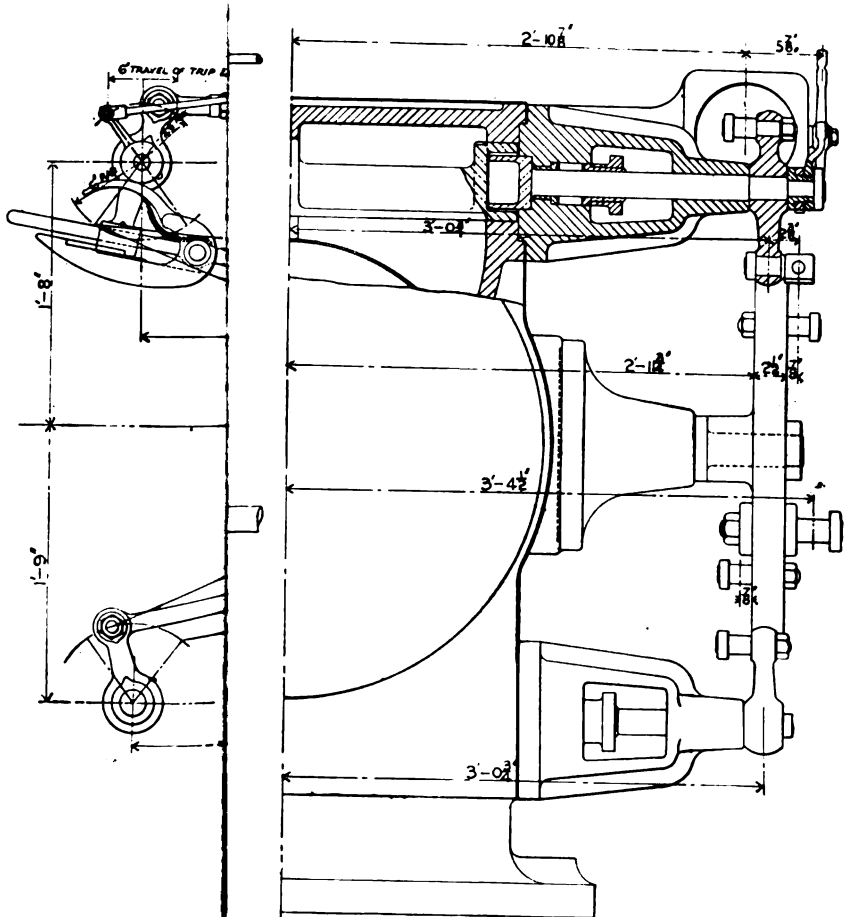

FIG. 409.

PLATE

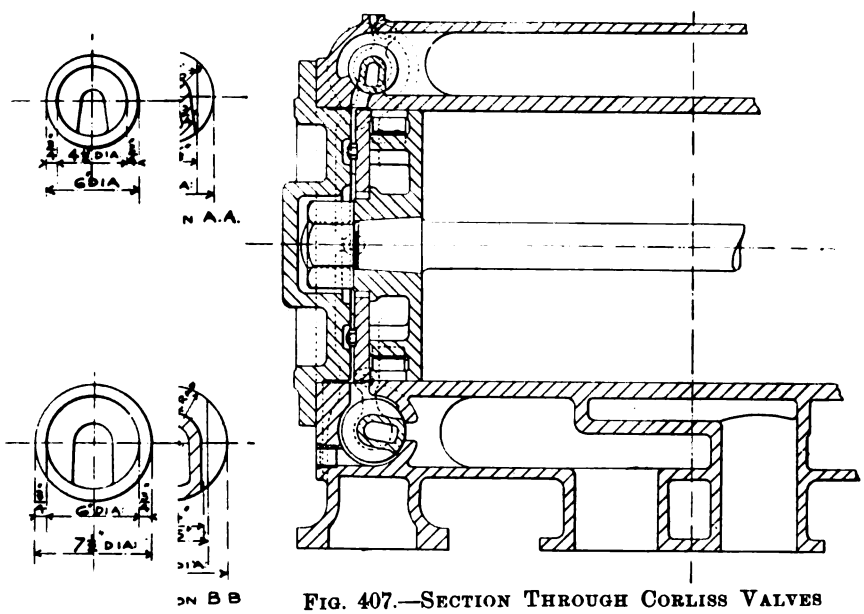

FIG. 407.—SECTION THROUGH CORLISS VALVES AND CYLINDER.

centre of the floating lever. The crosshead of the reversing engine is coupled by links to the reversing lever keyed on the weigh shaft which runs across the engine, and lifts or lowers the radius rod by means of the lifting levers and links attached thereto, thus putting the engine in forward or backward gear. The method of working is as follows:—When the reversing handle is put forward it moves the lever to the left, and consequently the lever which carries on its pin the top end of the floating lever, to the right. To the centre of the floating lever is attached the valve coupling rod, and its lower end is coupled by a rod to the reversing lever keyed on the weigh shaft; hence the floating lever, and through it the valve, is under the control of the engine and reversing handle at the same time.

When the top end of the floating lever is moved to the right on account of the handle being put forward, it moves the steam valve half the distance and admits steam to the front of the piston, which then moves in the same direction as the handle, and puts the engine in forward gear through the reversing lever; at the same time it moves the lower end of the floating lever to the left, or in the opposite direction to which the top moved, and consequently shutting off steam and locking the oil in the cataract cylinder by the cataract slide valve slightly before the piston has come to the end of its stroke, to prevent banging the covers. Thus, it will be seen that the reversing engine immediately follows the handle, and is locked by the oil cylinder as soon as the handle comes to rest in any position; and as the valves are always playing on the edges (due to the engine closing the valve as fast as the handle opens it) the motion is steadied by reason of the throttled oil passages.

With the object of still further increasing economy in the steam consumption of winding engines, Corliss valve gear has latterly been introduced. This gear lends itself to easy control by the governor, and economy is gained not only by the prompt cut-off during each stroke as required, but by the small clearance spaces at each end of the cylinder that are possible, as compared with other types of valve gear.

Figs. 403 and 404 show two views of this type of engine by Messrs. A. Barclay, Sons and Co. Limited. The steam and exhaust valves shown in figs. 405 and 406 respectively are of cast iron, working on a bored face, as will be seen from fig. 407, which is a longitudinal section through the cylinder showing the valves and ports, and from which will be seen by the short ports how small the loss of steam will be by clearance, which is reduced to a minimum.

The valves move on their longitudinal axis, and are actuated from a wrist plate as shown in figs. 408 and 409, through the medium of coupling rods which connect the pin in the wrist plate to the block in the reversing link. The steam

Fig. 410.

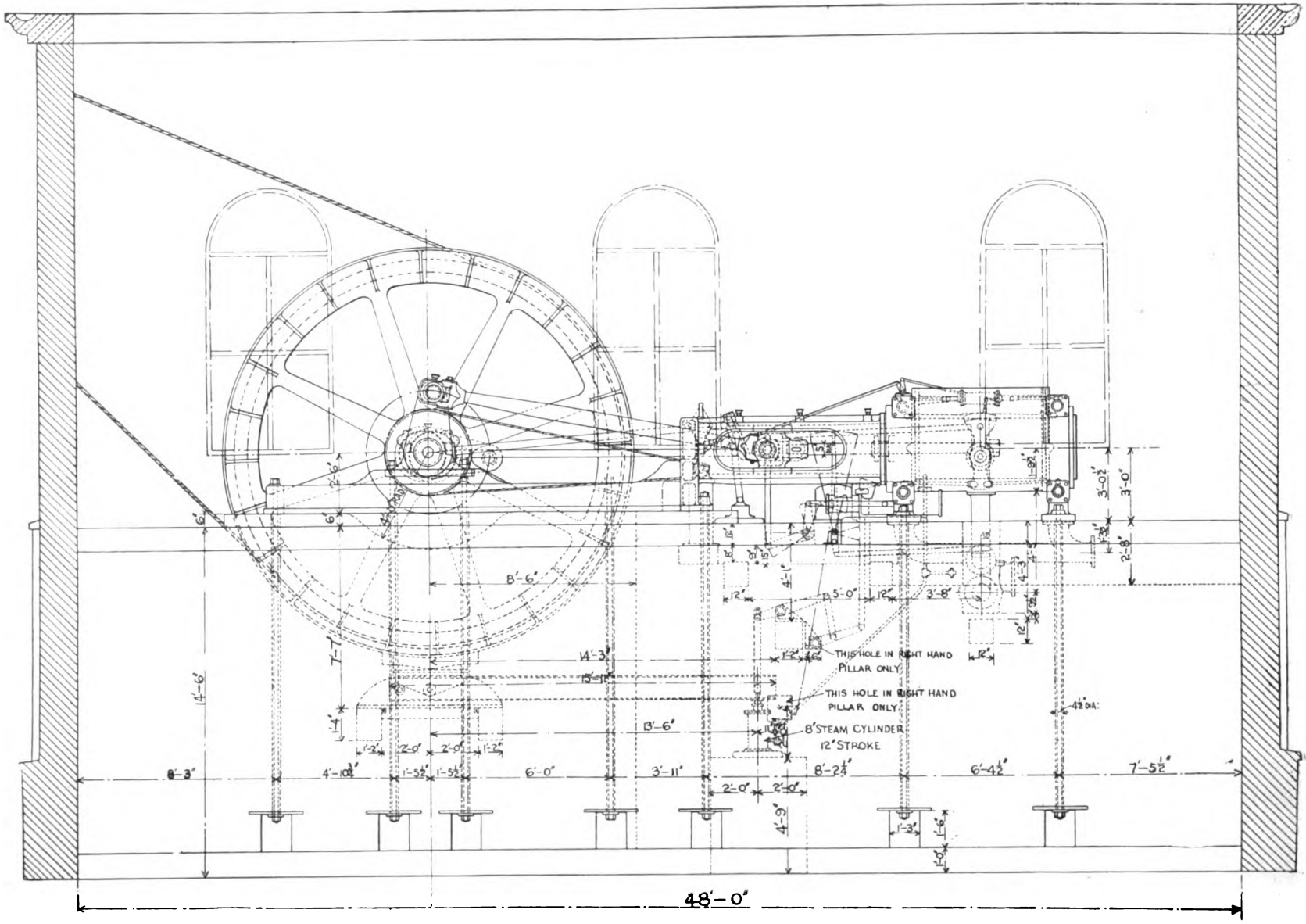
THIS HOLE IN RIGHT HAND PILLAR ONLY
THIS HOLE IN RIGHT HAND PILLAR ONLY
8" STEAM CYLINDER 12" STROKE
48'-0"
14'-6"
8'-6"
13'-6"
14'-3"
7'-7"
8'-3"
4'-10½"
1'-5½"
1'-5½"
6'-0"
3'-11"
8'-2¼"
6'-4½"
7'-5½"
2'-0"
2'-0"
4'-9"
5'-0"
3'-8"
3'-0½"
3'-0"
2'-8"
4½" DIA.

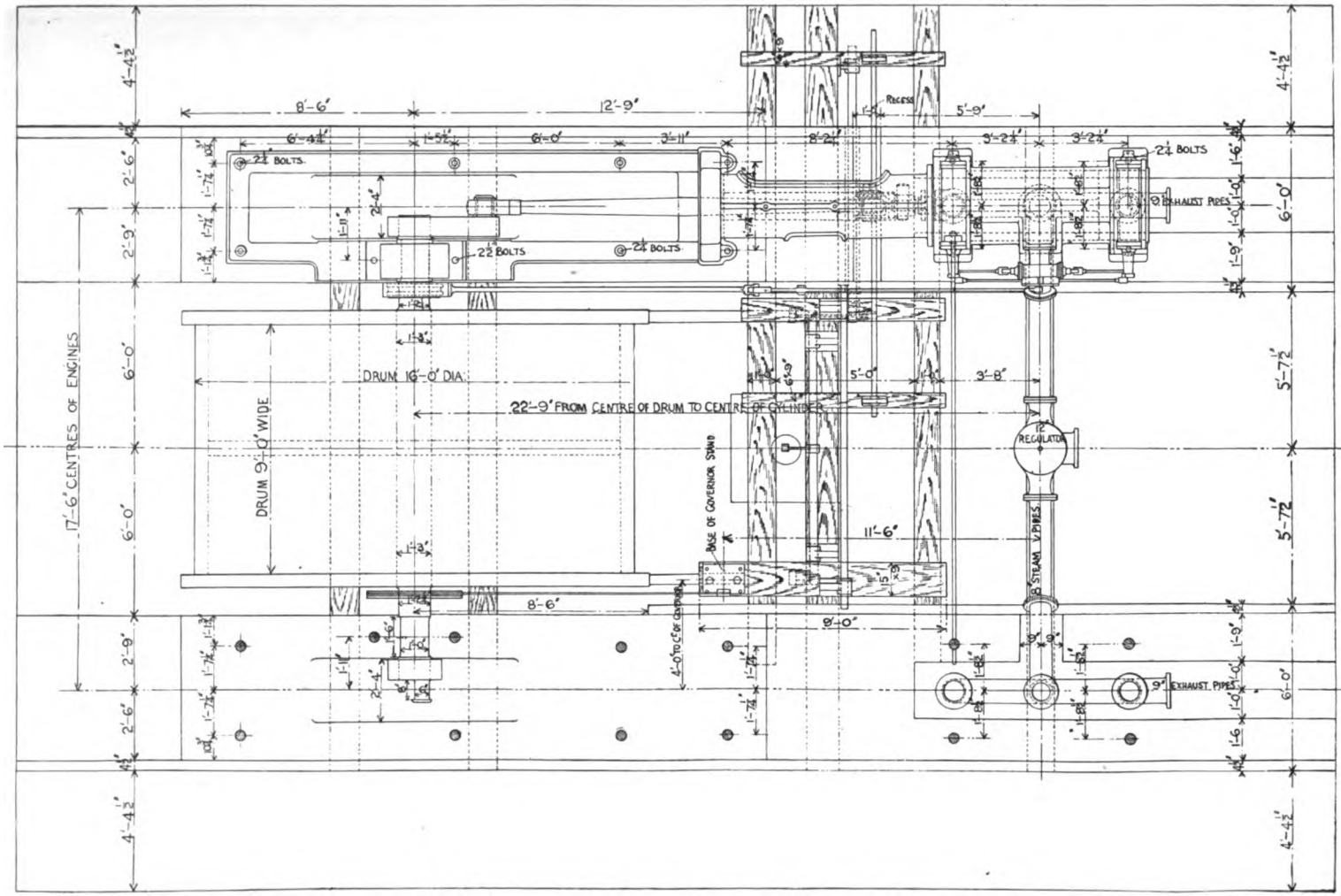

FIG. 411.

FIGS. 410 AND 411.—CORLISS VALVE WINDING ENGINES BY MESSRS. R. DAGLISH & CO. (*see* page 190).

valve is fitted with a double-ended lever keyed to the valve spindle, which is carried right through the valve, and works in a cast iron bonnet, bushed with gunmetal at one end, and at the other end in the cover which is bushed to receive it. The exhaust valve has only a single-ended lever, and is worked directly from the wrist plate by the coupling rod as shown.

Of the double-ended lever on the steam valve, one end is attached through the tripping mechanism and coupling rod to the wrist plate, whilst the other is attached to the piston rod of a piston working in a dashpot, which is provided with a strong spiral spring (not shown in the drawing), to close the valve immediately on its release from the wrist plate by the tripping mechanism. This mechanism, as will be seen from fig. 408, consists of a claw held up to the valve lever by a laminated spring, shown on the left-hand valve (but is omitted on the right), and so long as the claw is not depressed, the valve lever will remain coupled to the wrist plate, and consequently the valve will remain open for the full stroke. To the valve spindle, however, is attached a trip lever, worked through the coupling rods by the governor, and on the boss of this lever is a small projection, which, when brought into position by the turning of the lever, will depress the claw, and thus release the valve, which is immediately closed by the dashpot spring.

The engine is fitted with a powerful brake worked by either steam or foot, and steam reversing gear. The driver's platform is supported upon columns between the cylinders, so that the driver is placed above the engines, in front of the drum, and thus has everything well in view.

Figs. 410, 411 and 412 show a pair of Corliss valve gear winding engines, by Messrs. R. Daglish and Co., the cylinders being 30 in. diameter by 5 ft. stroke, and the drum, of cast iron, 16 ft. diameter by 9 ft. wide. The brake, of the "Burns" type, consists of a 12 in. by 5 in. steel joist, fitted with a wood block placed below the drum, as shown in fig. 410, and arranged to be worked by either steam or hand. The engine is also fitted with a steam reverser, and automatic cut-off gear, and the engines are designed for a steam pressure of 100 lb. per square inch.

A pair of geared winding engines, by Messrs. Daglish, fitted with two 12 ft. diameter drums, double helical steel spur gearing and Cornish valves, the cylinders being 20 in. by 3 ft. stroke, are shown in fig. 413.

A type of drum, by the same makers, is shown in fig. 414, which is an internal cone conical drum of 8 ft. 3 in. small and 13 ft. extreme diameter. The outer cheeks and the middle ring forming the brake path are of cast iron, and the arms, as will be seen, are of I section, which is the best and strongest form. This would appear to be an excellent form of drum, the small diameter being in favour of the engine when starting the load

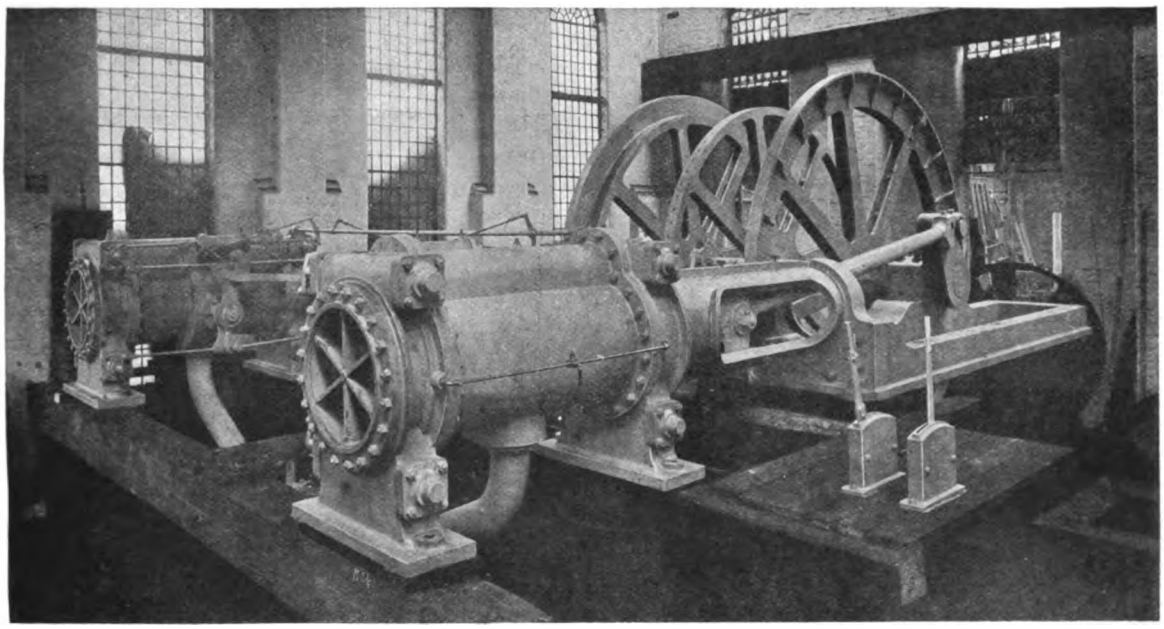

FIG. 412.—WINDING ENGINES BY MESSRS. R. DAGLISH AND CO.

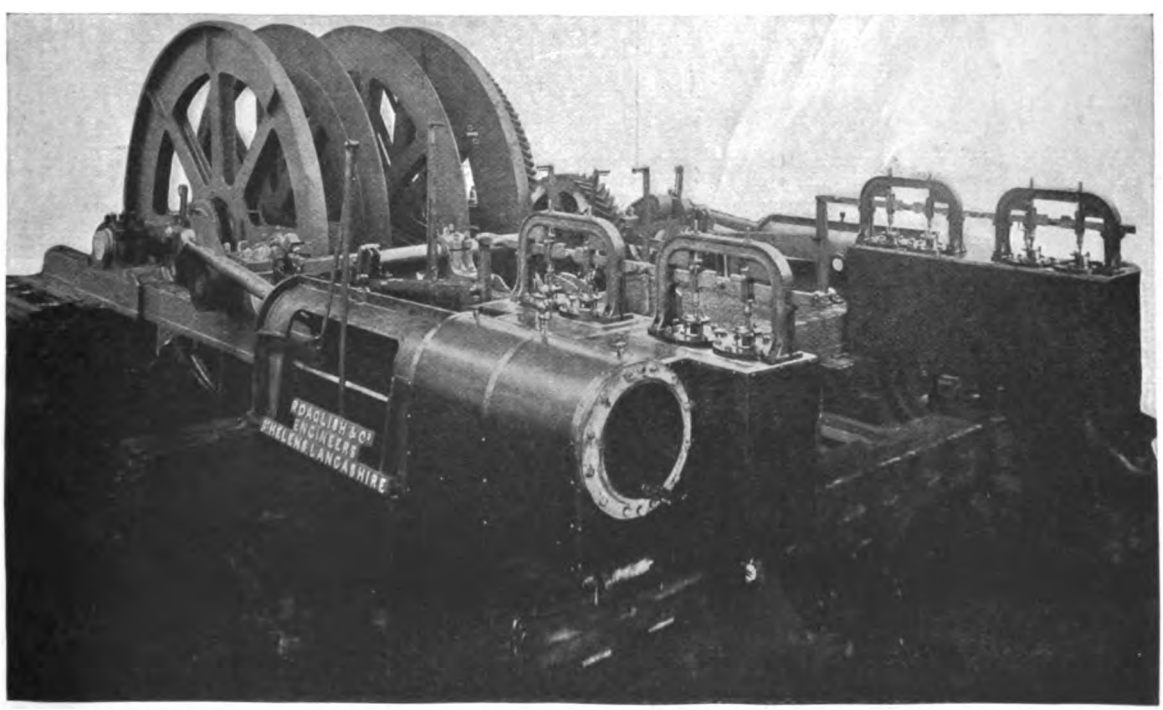

FIG. 413.—GEARED WINDING ENGINE BY MESSRS. R. DAGLISH AND CO.

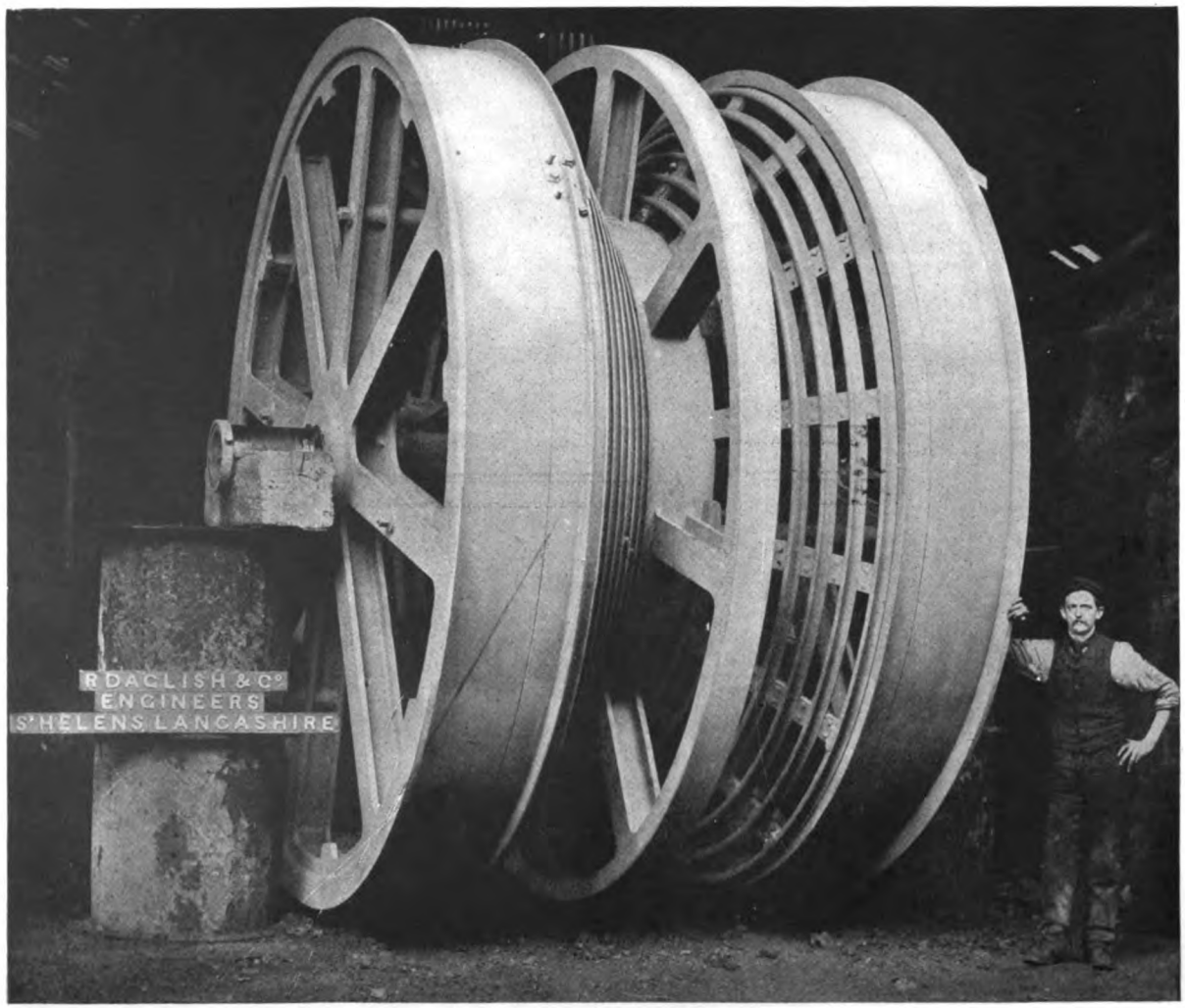

FIG. 414.—INTERNAL CONICAL DRUM BY MESSRS. R. DAGLISH & CO.

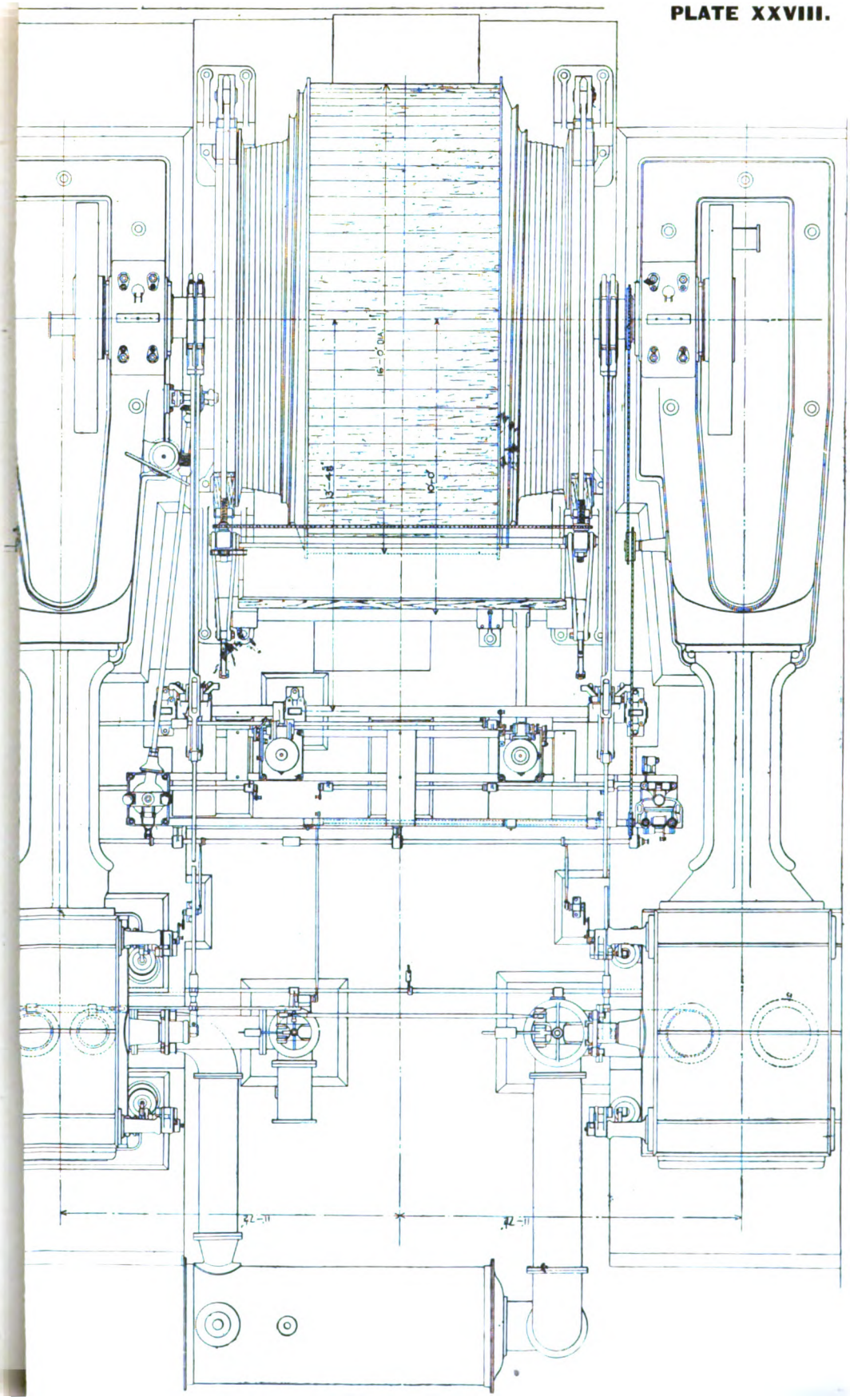

FIG. 417 (Plan).—CORLISS VALVE WINDING ENGINE BY MESSRS. FRASER AND CHALMERS.

PLATE XXIX.

Messrs. Daglish have had considerable experience in the construction of spiral drums, and fig. 415 shows a skeleton steel conical winding drum, 33 ft. large diameter and 18 ft. small diameter, for winding 4 tons of net coal from a shaft 763 yards deep, the size of the rope being 5¾ in. circumference. It is built up from steel angle and T bars, the rope spiral being a special rolled section, supported by small steel chocks, keeping all strain off the rivets, and its total weight is no less than 80 tons.

In the twin compound winding engine shown in figs. 416, 417 and 418, by Messrs. Fraser and Chalmers, the partly conical drum has been adopted. The engine is fitted with Corliss valve gear and the Whitmore brake gear, steam reverser and automatic cut-off gear, trunk guides and disc cranks. A receiver of large capacity is also provided, which, in order to facilitate starting after the engine has been standing, is fitted with a reducing valve, but so arranged that it can only come into operation when the main throttle valve is closed, consequently no steam is by-passed when the engine is running. The brake path is fitted with steel cleading, and, as will be seen in fig. 418, is ventilated. The engine is designed for a speed of 78 revolutions per minute, and consequently the disc cranks are necessary, and it may be noted here that in all winding engines it would be preferable to fit disc cranks in order to obtain a smooth running engine, and they should be designed to balance as far as possible the connecting rods. It is also intended to use a balance rope underneath the cages. The cylinders are 32 in. and 53 in. in diameter by 5 ft. 6 in. stroke: the drum being 11 ft. 8 in. diameter at the commencement of the lift, rising to 12 ft. 2 in. diameter for the first five revolutions, and from 12 ft. 2 in. to 16 ft. extreme diameter in 2½ revolutions, two dead coils being allowed for on the small part of the drum. This is probably the nearest approach to an ideal winding engine that has yet been produced.

The Whitmore brake gear is interesting, inasmuch as it is automatic in taking up the wear of the brake blocks. Figs. 419 and 420 illustrate a steam brake of the post type, in which A is the brake engine provided with a steam cylinder and cataract cylinder, controlled by a floating lever gear by means of which the position of the piston depends upon and agrees exactly with the position of the hand or foot lever working the brake. A weight or weights B suspended upon a rod C from the crosshead of the engine are sufficiently heavy to apply the brake against the ordinary working load, and consequently steam must be applied to the under side of the piston to take the brake "off," so that, should any accident occur in the steam main, or connections to the brake cylinder, the brake would go on; but is also so arranged that steam may be applied to the top side of the piston to so augment the weights, that the brake will hold the engine against the full steam pressure if necessary.

o

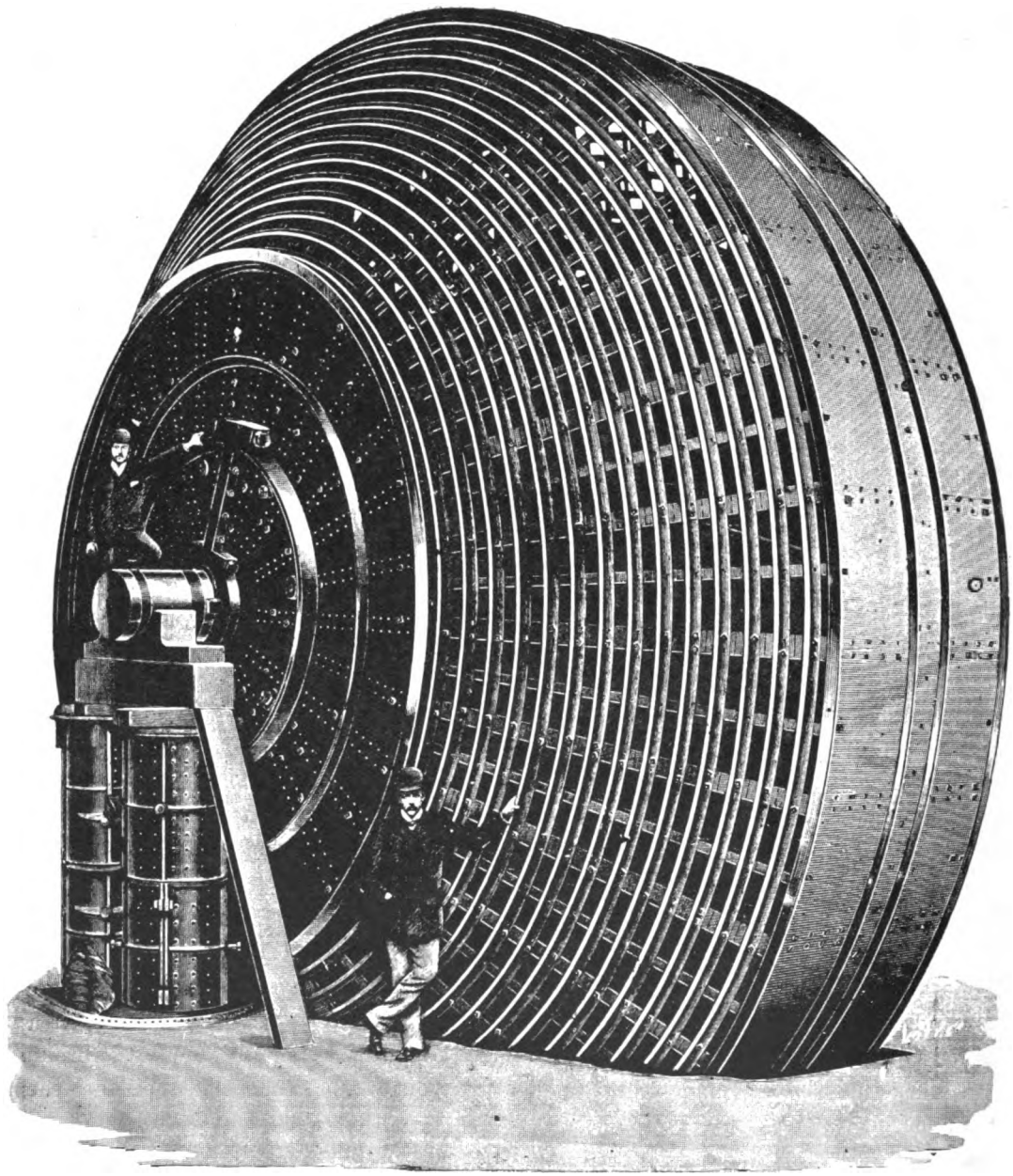

FIG. 415.—SKELETON STEEL CONICAL WINDING DRUM.

Fig. 419.

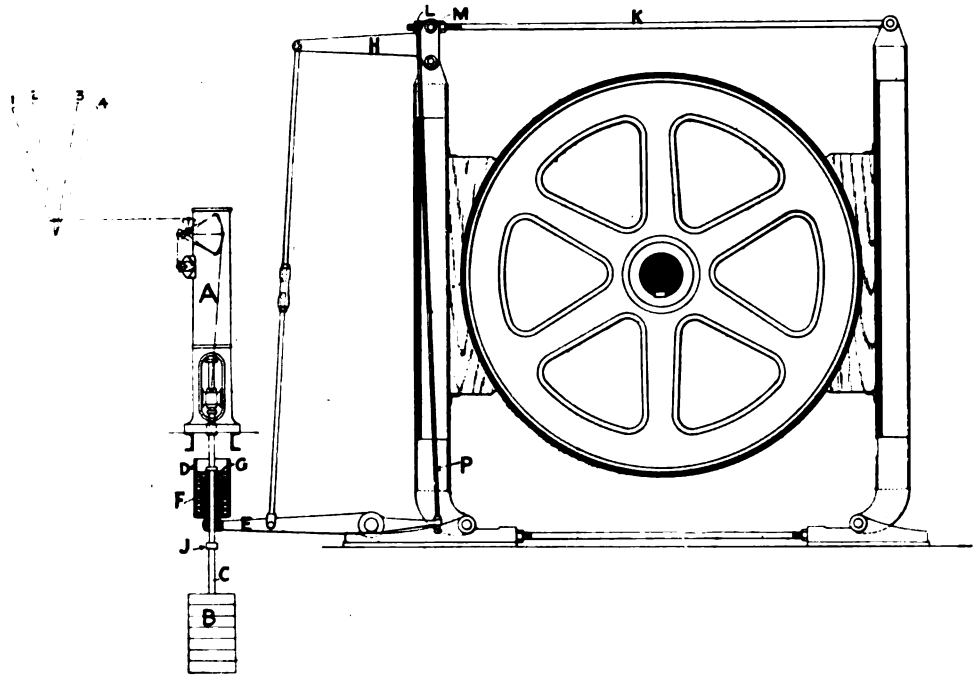

Fig. 420.

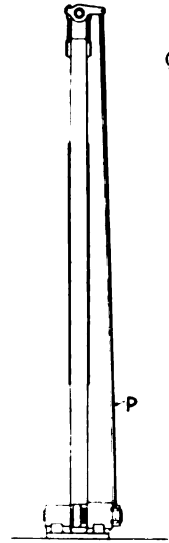

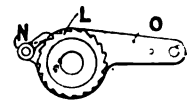

Fig. 421.

Figs. 419 to 421.—Whitmore Brake Gear Applied to Post Type Brake (*see* page 193).

FIG. 422.

FIG. 423.

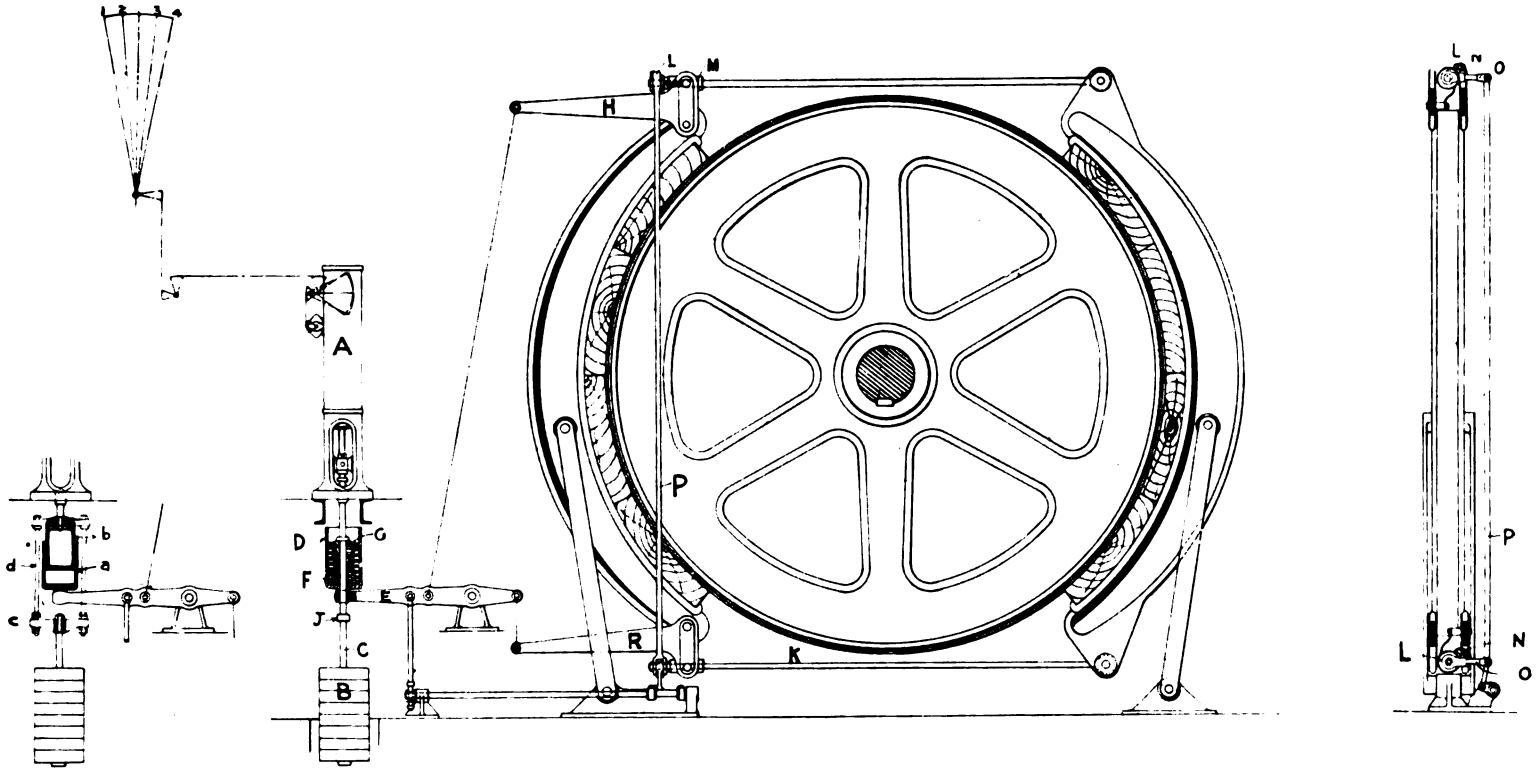

FIG. 425.

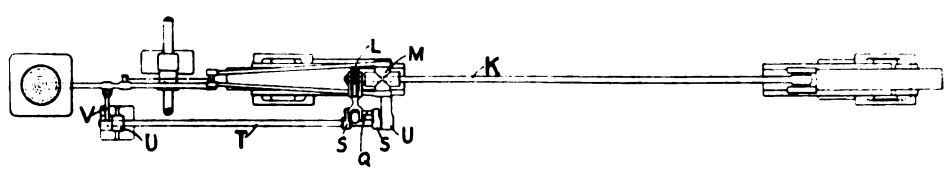

FIG. 424.

FIGS. 422 TO 425.—WHITMORE BRAKE GEAR APPLIED TO SUSPENDED POST TYPE BRAKE (*see* page 197).

The rod C works through a spring box resting on the lever E, and a spring or springs contained in this box are compressed between the plate G and the bottom of the box. The brake lever is connected to the top ends of the brake posts by the connecting rod and top lever H, and on being depressed draws the posts together. The varying load is applied by the compression of the springs, the weight B bringing them down by means of the plate G and the collar on the rod C; the load corresponding to the position of the controlling handle. Thus the further the handle goes over, the further do the weight and plates move downwards, compressing the springs and increasing the brake-power. The maximum power is applied when the plate G is touching a sleeve distance piece in the spring box, the handle being then in the position marked 4; and the minimum power is applied when the collar J is touching the under side of the lever E, the springs being then fully extended and the position of the controlling handle is at the point marked 2. By bringing the handle to the position marked 1, more steam is admitted to the under side of the piston, which is consequently still further raised, and carries with it the weight B and the fixed collar J, lifting the brake lever E sufficiently far to give clearance between the drum cleading and brake blocks.

The end of the rod K connecting the two posts together is screwed, and is fitted with a ratchet nut L (shown in detail in fig. 421) mounted in the crosshead of the lever H, and provided with a pawl N mounted in the lever O. This lever O is connected by the rod P to the extended arm of the lever E, and it is this gear which comprises the take-up mechanism. Its action is as follows:—On the downward movement of the brake lever E, *i.e.*, when the brake is applied, the rod P moves upwards, and when the lever E and rod P are forced a certain distance the pawl N will take up a tooth. On the return stroke then of the lever E the rod P will be brought downwards, pulling round with it the lever O and thus screwing up the ratchet nut L by that amount. It will be evident that the lever P will never be lifted sufficiently far to take up another tooth by applying the same load or pressure to the brake breasts unless the latter have worn to that extent. The adjustment therefore is so slight at each operation that it makes very little difference in the position of the brake engine piston before and after each adjustment, so that the braking power is practically constant for any position of the handle until the brake blocks are quite worn out.

Figs. 422 to 424 show the gear applied to the suspended, or as it is sometimes called "American," type of post brake. As will be seen, the posts are suspended by diverging links, a little below the centre, the reason for which being that when so suspended the drum tends to throw the brakes "off" on being released. The pressure is applied at both top and bottom by means of the levers H and R. The

take-up gear is applied in a similar manner as previously described, except that it is transmitted through the spindle T, supported in the bearings U, U (fig. 424), by means of the small arms V and S, S. Fig. 425 shows a dashpot arrangement in place of the spring box which may be adopted. In this case the weights are suspended by means of the crosshead *c* and rods *d* to the dashpot piston *b*, working

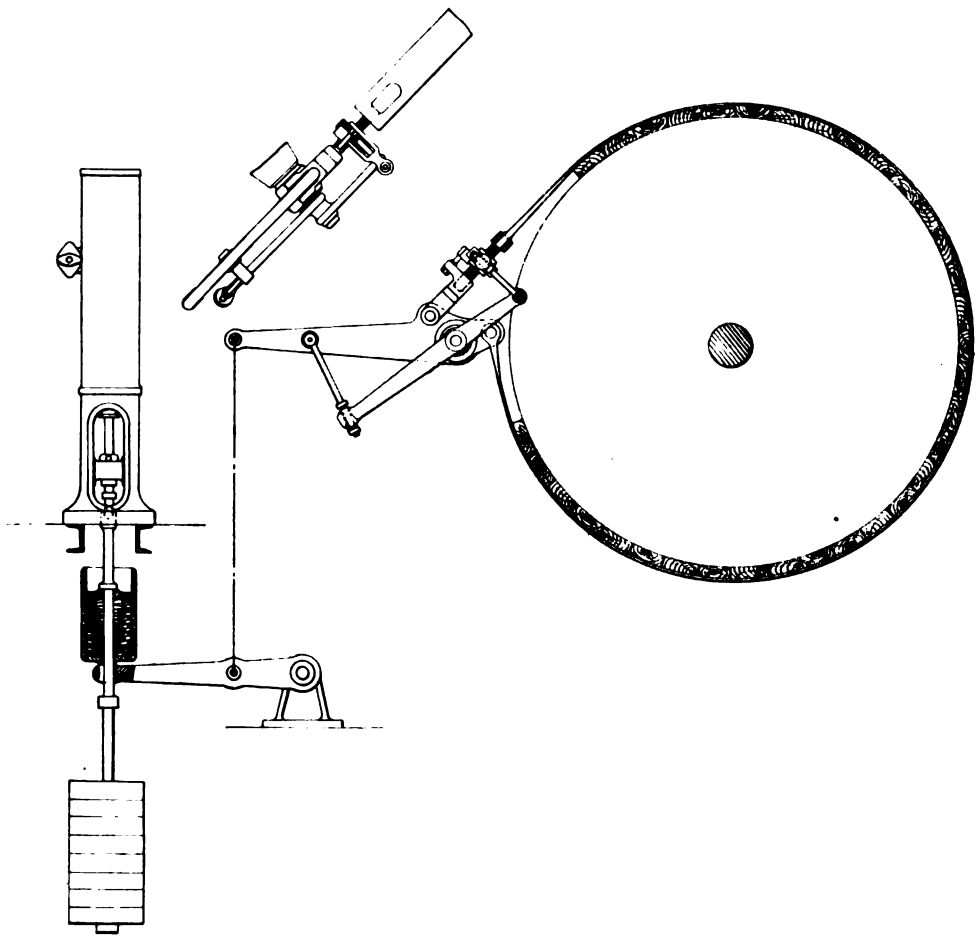

FIG. 426.—WHITMORE BRAKE GEAR APPLIED TO BAND BRAKE.

in the dashpot *a*, which rests on the lever E in a similar manner to the spring box F.

Fig. 426 shows the gear as applied to a band brake, which type, however, is seldom applied to any but very small engines used for winding purposes.

The engine shown in figs. 427 and 428 was designed by Messrs. Robey and Co. Limited, to wind coal from a pit 400 yards deep, the run to be made in thirty-five seconds from start to landing on keps.

The load was made up as follows.—

	Tons	cwt.
Rope, 4 in. circumference	1	10
Cage, complete	1	10
Tram (tare)	0	10
Coal in tram	2	0
Total	5	10

Unbalanced load:—Rope and coal, 3 tons 10 cwt., the steam pressure being 120 lb. per square inch.

The engine is provided with an automatic reducing and intercepting valve, admitting live steam to receiver at reduced pressure to start the engine, and automatically cutting off the same when started.

The following is the specification of these engines:—

Type or Design.—One coupled compound engine suitable for working at 120 to 150 pounds steam pressure. To have cylindrical rope drum on crank shaft for direct winding, and to be arranged with Corliss valves, governor, trip motion and Allan's straight link reversing gear.

Cylinders.—To have separate liners of special hard cross-grained cast iron, high pressure 23 in., low pressure 37 in., diameter, 48 in. stroke, the space round liners forming a steam jacket. Spring relief valves to be fitted to each cylinder, also indicator cocks and gear with the necessary reducing motion for taking diagrams. The piston rods to have United States metallic packing to each piston rod gland, and Wheeler metallic shavings to the valve rod glands. Low-pressure piston rod to pass through back cover and have tail guide and slipper.

Cylinder Lagging.—Each cylinder to be lagged with non-conducting material, and covered with blue steel plates neatly finished by polished steel bands.

Pistons and Rods.—Pistons to be deep and light, of special construction, fitted with rings. The rods to be of steel, attached to the piston by a nut and cone, and to the crossheads by cone and cotter, the end of the rod having a setting-back nut for taking off the crosshead.

Valves.—To be of the trip Corliss type to reduce the travel; to be accurately turned and fitted to the cylinder.

Valve Gear and Reversing Gear.—To be the Allan straight-link motion with steam reverser, the link being coupled to a wrist plate, from which the steam and exhaust valves are worked. A variable trip motion to be fitted to each cylinder for expansion purposes, having a range from 0 to $\frac{1}{8}$ upwards. The trippers arranged so that they can be thrown out of gear, and the valves left to cut off steam by virtue of their own lap as in ordinary valves. The trip gear to be under the control of a powerful governor, which can be put out of action by the driver.

Governor.—The governor to be of the static type with powerful spring and driven by pitch chain. The gearing to have machine-cut teeth. The governor to be coupled up to the trip motion in such a manner that it has full control of engine and comes into action when engine attains maximum speed, automatically cutting off the steam. The steam can be admitted to nine-tenths of the stroke, leaving at the same time a free exhaust for steam. To be so arranged that the reversing hand lever can be left at full gear, the governor automatically varying the steam admission.

A special feature of this governor and valve gear is the controlling gear, by means of which full steam can be turned against the engine by the reversing lever at no matter what speed the engine may be running, the governor at the same time being automatically thrown out of gear, the operation being effected by the hand lever only. The governor comes into gear again as soon as the engine has changed its direction of running, leaving the cut-off for full length of stroke until normal speed is attained.

Eccentric Sheaves.—Eccentric sheaves to be cast in halves and securely bolted together; to have large wearing surface, and to be fixed on the crank shaft with keys or feathers.

Eccentric Straps.—To be of cast iron with large wearing surfaces, and arranged with a T end for connecting to the eccentric rods. Each strap to have large lubricator of the Stauffer type, with piston and spring to show when acting.

Eccentric Rods.—To be of steel polished, and to have adjustable ends with brass bushes for connecting to the reversing link pins.

Crossheads.—Crossheads to be of cast steel fitted with cast iron slippers having large wearing surface and means of adjustment.

Gudgeon or Crosshead Pins.—To be of steel, 4⅜ in. diameter, 7¼ in. long, carefully fitted into crossheads. To be coned at each end, and to have split steel ferrules for making an absolutely tight fit.

Connecting Rods.—To be of hammered mild steel turned and polished, 4¾ in. diameter at small end, and 6¾ in. diameter at the middle. The large end to be of the solid pattern, fitted with gunmetal steps, in. diameter, 9 in. long, and screw cotter adjustment. The small end to be solid, also fitted with gunmetal steps and screw cotter adjustment. The large end to be lubricated by soft grease from a positive-action mechanical-feed lubricator.

Engine Frames.—To be of mammoth girder type, with bored guides for crosshead slippers, the front cylinder cover forming part of the guides, enabling it to be tooled when the guide is bored. The main bearings to form massive castings into which the guides are spigoted, and to form a large base suitable for bolting to the foundation. Each bearing keep to have a large oil reservoir and strainer, and the bearings each to be provided with oil-pump to circulate a constant stream of oil.

Crank-shaft Bearings.—To be of cast iron in four parts, 11 in. diameter, 22 in. long, with wedge adjustment, and to be lined with white metal.

Crank Shaft.—To be of steel, a neck to be turned at each end to form the main bearing. The shaft to be swelled in the centre, where the drum is keyed on, to 15 in. diameter.

Discs.—The discs to be of cast iron, 5 ft. 3½ in. in diameter, accurately tooled, polished and balanced and shrunk and keyed on the ends of disc shaft. The crank pins to be keyed and shrunk in and riveted over.

Two Starting Valves.—Two suitable double-beat equilibrium stop valves with pilot valves to be provided. The starting lever to be handily arranged on the driver's platform, closing automatically when the hand lever is released. One to be on the high-pressure cylinder and the other between the low-pressure cylinder and the receiver.

By-pass Valve.—Reducing by-pass valve to be provided so that live steam at a reduced pressure can be admitted to receiver for starting the low-pressure cylinder; the action being automatic both for admission and closing.

Provision to be made so that the pressure of steam to low-pressure cylinder can be varied to suit circumstances.

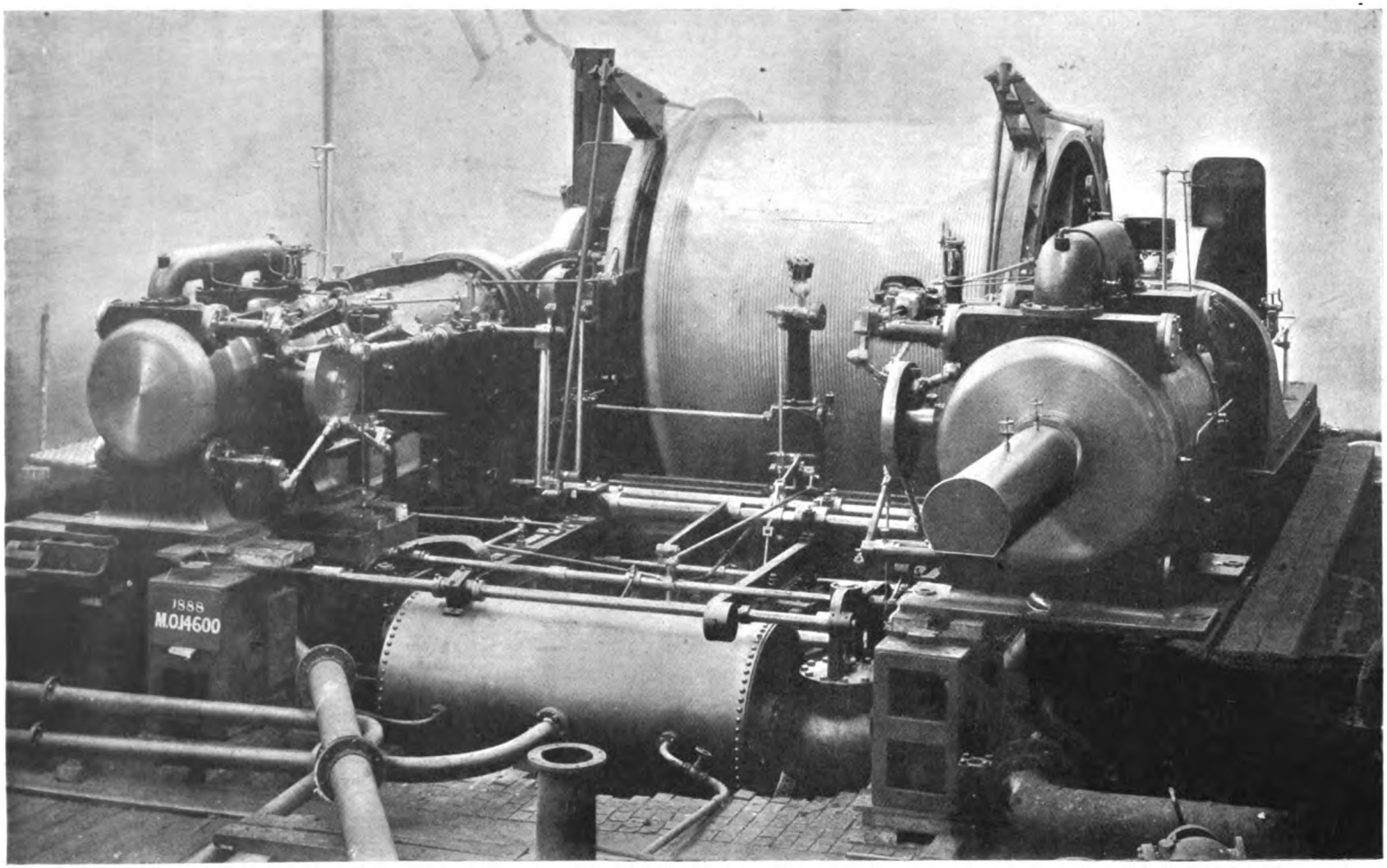

FIG. 427.—WINDING ENGINE BY MESSRS. ROBEY AND CO. LIMITED (*see* page 199).

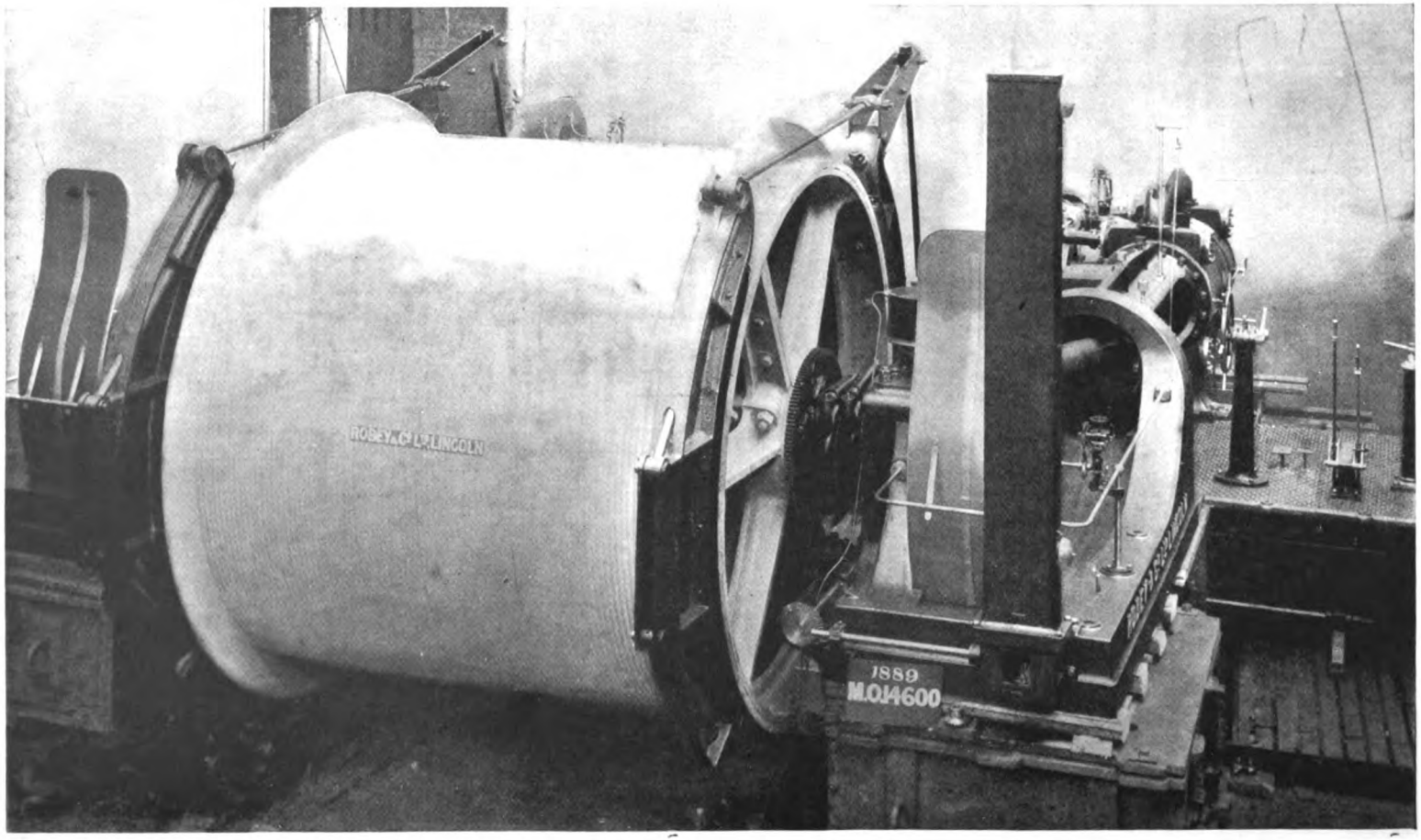

FIG. 428.—WINDING ENGINE BY MESSRS. ROBEY AND CO. LIMITED (*see* page 199).

Receiver.—A steam-jacketed receiver two and a-half times the size of the low-pressure cylinder to be provided. The connecting pipe from high-pressure exhaust to have a three-way valve worked by gear from platform so that receiver can be shut off and steam turned to atmosphere if required, and when exhausting into receiver, atmosphere be shut off. An efficient steam trap to be provided for draining the receiver.

Winding Drum.—To be of massive construction, the ends and centre of cast iron in halves, 10 ft. 6 in. diameter by 9 ft. wide. Each end to form a brake path. The drum body to be formed of steel plate and overlaid with a shallow grooved mild steel plate forming a spiral grooved path for winding rope. The drum to be securely keyed on the shaft and to have turned bolts connecting the halves. The flange of each drum to have 1⅛ in. holes about 12 in. centres, and 4½ in. up from bottom of grooves for attaching winding rope, the end of which is secured by a special bolt.

Brakes.—A powerful post brake to be provided for each end of drum, the brakes to be actuated from driver's platform by foot lever. An auxiliary rack and pinion gear to be provided to foot gear.

Indicator.—A vertical pillar indicator showing position of the two cages in shaft to be fitted, to be driven by positive gearing from engine shaft and to be provided with suitable means of adjusting position of the pointers. To stand beyond main bearing.

Platform.—A substantial platform to be arranged at floor level on left hand side of engine. All starting reversing brake, cylinder cock and other levers to be brought to this platform and handily arranged for the driver.

Fittings.—Mechanical lubricators to be fitted to each cylinder, and Stauffer's lubricators to all working parts, in addition to mechanical lubricators for main bearings and crank pins. Indicator cocks and the necessary gear for taking indicator diagrams to be provided, also hand-rails round disc and crank pins, and the necessary protection round tail guide.

Foundation Bolts.—A full set of wrought iron foundation bolts, with the necessary washer plates, to be provided, say 10 ft. long.

Materials and Workmanship.—The materials and workmanship throughout to be of the highest class, and all reasonable facilities to be offered for inspection during the course of manufacture.

The engine shown in fig. 429, made by Messrs. Robey and Co., is of the coupled high-pressure Corliss type, with governor and automatic trip cut-off gear. The engine is for winding purposes, and has both drums loose on the shaft and fitted with powerful clutches of the rim type. The clutches and brake are operated by steam, and steam gear is also provided for the reversing.

The engines were required to work with double-deck cages, carrying two trucks of ore, the net load of which when full was 60 cwt. (excluding rope), from a depth of 3,000 ft. The total load including rope was 146 cwt., and the required hauling speed was 1,500 ft. per minute. Steam pressure available, 90 lb. per square inch.

The engines were made to the following specification :—

Type or Design.—One pair of high-pressure engines, coupled suitable for working up to 90 lb. steam pressure, with two cylindrical rope drums on crank shaft for direct winding, and having Corliss valves, trip motion, governor, and Allan's straight link reversing gear.

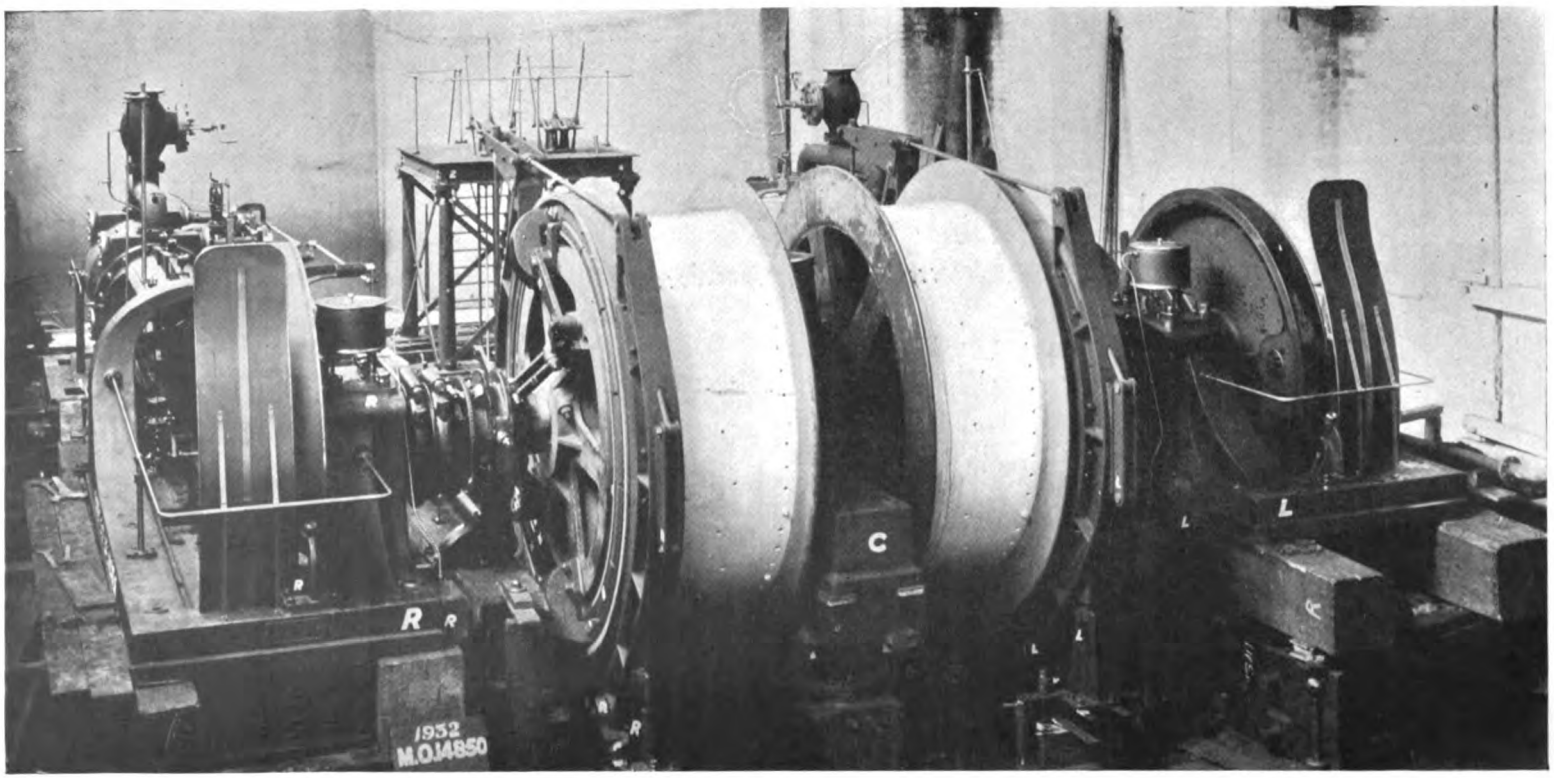

FIG. 429.—DOUBLE DRUM WINDING ENGINE BY MESSRS. ROBEY AND CO. LIMITED.

Cylinders.—The cylinders with 24½ in. diameter, 72 in. stroke, each had separate liners of special hard close-grained cast iron, the space round liners forming a steam jacket. Spring relief valves were fitted to each cylinder, also indicator cocks and gear with the necessary reducing motion for taking diagrams.

Cylinder Lagging.—Each cylinder was lagged with non-conducting material, and covered with blue steel plates neatly finished with brass bands.

Pistons and Rods.—Pistons were of cast iron fitted with Ramsbottom rings and arranged so that they could be removed without taking out the piston. The rods of steel, attached to the piston by a nut and cone, and to the crossheads by cone and cotter, the end of the rod having a setting-back nut for taking off the crosshead.

Valves.—Of the trick Corliss type to reduce the travel, and accurately turned and fitted to the cylinder. The valves fitted on the stems so as to follow up the wear, and arranged so that they can be withdrawn from the back without disturbing the gear.

Valve-gear.—Of the Allan straight-link motion reversing type, the link being coupled to a wrist plate from which the steam and exhaust valves are worked. A variable trip motion controlled automatically by governor was fitted for expansion purposes. The governor and trippers could be thrown out of gear, and the valves left to cut off steam by virtue of their own lap as in ordinary valves. Steam reverser was provided with cataract cylinder. All rods were adjustable and fitted with adjustable brasses. All pins and wearing parts were deeply case-hardened. All nuts, &c., liable to be taken apart were case-hardened.

Governor.—The governor was of the static type with powerful spring, and driven from the lay shaft by pitch chain. The gearing was machine-cut. The governor was coupled direct to the trip motion in such a manner that it had complete control of the engine, and came into action when engine attained maximum speed, automatically cutting off at any point varying from zero to nine-tenths of the stroke, leaving at the same time a free exhaust to the steam. It was arranged that the reversing hand lever could be left at full gear, the governor automatically varying the steam admission.

Eccentrics and Straps.—The eccentric sheaves were turned flat, having projection ring in centre, and each provided with a cast iron strap, giving large wearing surfaces and ready means of adjustment. The centre rib on sheave fits into a groove in the strap, leaving a small annular space all round containing the lubricant. The straps are fitted with Stauffer spring lubricator, and the ends of eccentric rods are attached with steel set screws.

Pistons.—The pistons were of light and strong construction, made of best cast iron, and fitted with Ramsbottom rings, so arranged that they can be taken out without withdrawing the piston.

Piston Rods.—Of steel, 4¾ in. diameter, accurately turned and secured to each piston by cone and nut and to the crosshead by cone and cotter, a forcing-off screw being provided on each rod for detaching the crosshead.

Crosshead and Gudgeons.—Made of special cast steel mixture, fitted with large cast iron shoes having Babbitt metal surfaces. The shoes were attached to crosshead by steel set screws offering ready means of adjustment for wear. The gudgeons were 5¼ in. diameter by 8 in. long, of steel, accurately turned, deeply case-hardened and ground to size, and had conical heads secured in crosshead by key, and steel split cone ferrule.

Connecting Rods.—Of best hammered mild steel, 5¼ in. diameter at small end, and 7¼ in. at middle. The large end fitted with marine type massive gunmetal steps, 7 in. diameter by 8 in.

long, having turned bolts in reamered holes. The small end was solid with gunmetal steps 5¼ in. diameter by 8 in. long, having wedge adjustment.

Crank Shaft.—Made from best mild steel, turned all over and neck bearing formed in each end, 12 in. diameter, 24 in. long. The shaft was swelled up in centre to 15 in. diameter, to take the drum bosses, and had swell in each end for disc.

Discs.—The discs were made of the best cast iron, 8 ft. diameter, 8 in. thick, accurately turned, balanced and polished, and fitted with steel crank pins 7 in. diameter, 8 in. long, forced in and riveted over. The discs were keyed and shrunk on the shaft.

On the discs was turned a brake path, fitted with a half band brake, worked by a foot lever from driver's platform.

Bedplates and Guides.—Bedplates were heavy cast iron mammoth pattern, giving large base on foundations and having the jaw for crank bearing cast in. The end was bored and faced, and spigoted into it was a massive trunk casting, forming bored guide for crosshead and front cylinder cover. The boring of the guide facing the ends, and tooling out the stuffing box was done in one operation, in the same machine, ensuring perfect alignment.

Main Bearings.—Main bearings were of cast iron, four-part type, 12 in. by 24 in., heavily Babbitted side wedges provided for adjustment, and provision made for easily removing the bottom part of journal when relieved of the weight of shaft.

Starting Throttle Valves.—The throttle valve was of the equilibrium double-beat type combined with pilot valve. The valve was fixed underground, and worked with lever from starting platform between the engines.

Winding Drums.—Winding drums were loose on shaft, each 8 ft. diameter, 2 ft. 9 in. wide. The ends of cast iron in halves bushed with brass and the bodies of steel plate. Each drum had a powerful Hall's friction clutch of the rim type actuated by a steam cylinder.

Post Brakes.—Brakes were of a substantial design, cast iron curved beams with wrought iron stay rods, and mounted upon trunnions in heavy cast iron base-plates, one fitted to each side of the drum.

The brake posts were connected together, all rods and levers having ample or ready means of adjustment and sufficiently powerful to hold the engine against full steam.

The brakes were applied by means of a vertical engine. The brake engine was fitted with a system of floating levers whereby the position of the piston, and consequently the degree of intensity with which the brakes were applied, could be varied at will.

Safety Stop Gear.—Automatic safety stop gear was provided to each drum, so that if through any cause the speed of the engine was not suitably reduced as the cages approach the top or bottom of the shaft, the apparatus would immediately act, putting on the steam brakes and shutting off the steam from engine.

Depth Indicator.—Pit indicator driven by pitch chain from each drum was provided and fixed in a prominent position. It was of the drum spiral type, and provided with a gong to call driver's attention when cage had attained a certain position.

Platform and Controlling Gear.—A raised platform was provided between the two engines of sufficient height for the driver to see over the drums. The platform was constructed of channel bars with chequered iron floor plates on cast iron columns, and had ladder and handrails complete. The whole of the controlling gear for starting, reversing, brakes, &c., was brought to this platform and handily arranged in suitable position for the driver to easily get at.

Fittings, &c.—The following fittings were provided:—Steam pressure gauges to both cylinders, steam traps and copper pipes, mechanical sight-feed lubricators to each cylinder, oil pumps and strainers to main bearings giving a constant stream of oil, mechanical lubricators for soft grease to crank pins. Other parts of engine were provided with sight drop and Stauffer spring lubricators.

Splash guards and drip trays to keep oil from running on the foundations, of neat design, with brass beading handrails and columns round the crank. Foundation bolts and plates.

Materials and Workmanship.—The engine was constructed of the very best materials, and workmanship was of the highest class, and every facility was offered for inspection during progress of work.

Instead of the cut-off gear being automatic and controlled by means of a governor, it is sometimes so arranged that it is controlled by the engineman—not always the best arrangement, but one which gives the driver absolute control over the steam, and he may therefore work with full steam, or put in or out the cut-off gear at any point during the wind. Such an arrangement, by Messrs. Grant, Ritchie and Co., is shown in figs. 430 and 431.

The valve-gear is worked by rocking levers in the usual way, but the tripping mechanism is put into action by the levers A A, which are coupled through coupling rods, levers, and the cut-off shaft to the throttle valve starting lever. The throttle valve is raised by means of an eccentric, so that though the valve may be fully open, the cut-off gear does not come into action. On moving the throttle valve lever further over, however, which ensures that the valve shall be open to its fullest extent, and that the steam will not be wire drawn or throttled, the levers A A are drawn downwards, causing the valves to trip and thus cut off the steam.

A somewhat novel form of valve gear is that of Thornley's patent, manufactured by Messrs. Buxton and Thornley, and illustrated in figs. 432, 433, and 434.

As will be seen, the ordinary rocking levers are dispensed with, and the valves raised by means of a cam sliding longitudinally in a bearing between the steam and exhaust valves, and a trigger fixed in the valve spindle frame, both the cam and trigger having inclined faces. In the illustration all the valves are shown closed, but it will be seen that if the cams are moved—say to the left—the inner (steam) valve on the right and the outer (exhaust) valve on the left will be raised. A certain amount of side pressure must exist, but as the slopes are easy this is reduced to a minimum. Between the steam chests is the governor, a separate governor being required for each engine; and the two cams are connected by means of couplings to a spindle of square shape, carrying a small pinion, the square spindle being, of course, free to move longitudinally through the pinion.

To the pinion is geared a segmental rack, which is coupled by means of levers

to the sleeve of the governor as shown in fig. 433, so that as the governor rises or falls, by means of this rack, it will rotate the pinion and consequently the square spindle and cams working the valves. It is this action which regulates the cut-off. The inclined surface of the cams is cut helically, and consequently a partial rotation will bring the slope of the cam nearer the trigger, and consequently the valves will open earlier, giving lead. A still further rotation of the cams allows the triggers on the steam valves to drop into the spiral part of the rectangular recess, after being lifted, thus shortening the period of admission, depending upon the position of the spiral and the speed of the engine. On the exhaust side the recess is circular, as will be seen from the separate views of the cams, and therefore the closing of the exhaust valve is not affected by the rotation of the cams.

The governor is designed to give two separate lifts. For the first lift the governor has merely the weight of the circular plate and connecting arms to raise, which comes into operation about the second stroke, and gives lead to the valves. As the speed increases the large weight is raised, and upon the position of this weight depends the point of cut-off.

Messrs. Buxton and Thornley also have an arrangement by which one governor can control both engines. In some cases it may be preferable to have two governors, as this renders each engine independent of, and uninfluenced by the other, whether working or standing.

In order to get rid of the inertia effects of a heavy drum and angling of the rope, Herr Koepe dispensed with the drum, and adopted in its stead a grooved pulley. As is now well known, this system consists of a single rope passing over a large pulley on the crank shaft of the engine, over the two headgear pulleys, and attaching a cage at each end, with a balance rope beneath the cages. The friction of the rope on the pulley is sufficient to raise the useful load, and in order to enhance the friction the groove of the pulley is filled or lined with wood, leather or hemp rope, and the rope is not greased. So far it has been but little used in this country.

Figs. 435 to 438 illustrate two winding engines of this type, from drawings kindly supplied by Messrs. W. Edward Kochs and Co. In figs. 435 and 436 the pulley is of cast iron, whilst in figs. 437 and 438 the pulley is built up from steel sections and plates. Its construction will clearly be seen from figs. 439 and 440, which show a similar pulley of smaller diameter. Both engines are fitted with powerful steam brakes, that shown in fig. 435 being also arranged to be worked by foot; it is also automatically put on by the winding indicator by means of the suspended lever and weight, in the event of the engineman winding too far. In the engine shown in figs. 437 and 438 the emergency brake consists of a heavy weight

FIG. 430.

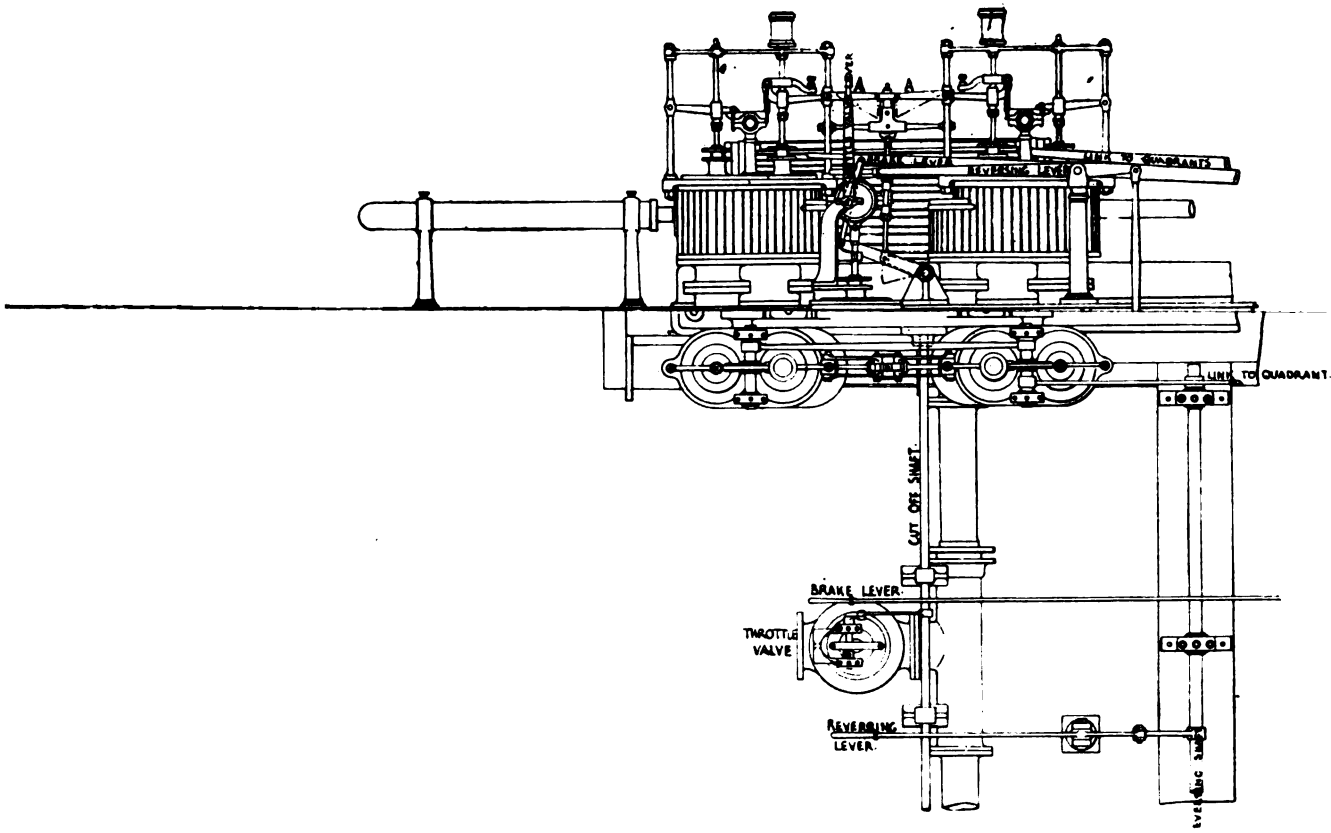

FIG. 431.

FIGS. 430 AND 431.—MESSRS. GRANT, RITCHIE AND CO.'S VALVE GEAR.

PLATE XXX.—*(To face page 208).*

PLATE XXXI

FIG. 432.

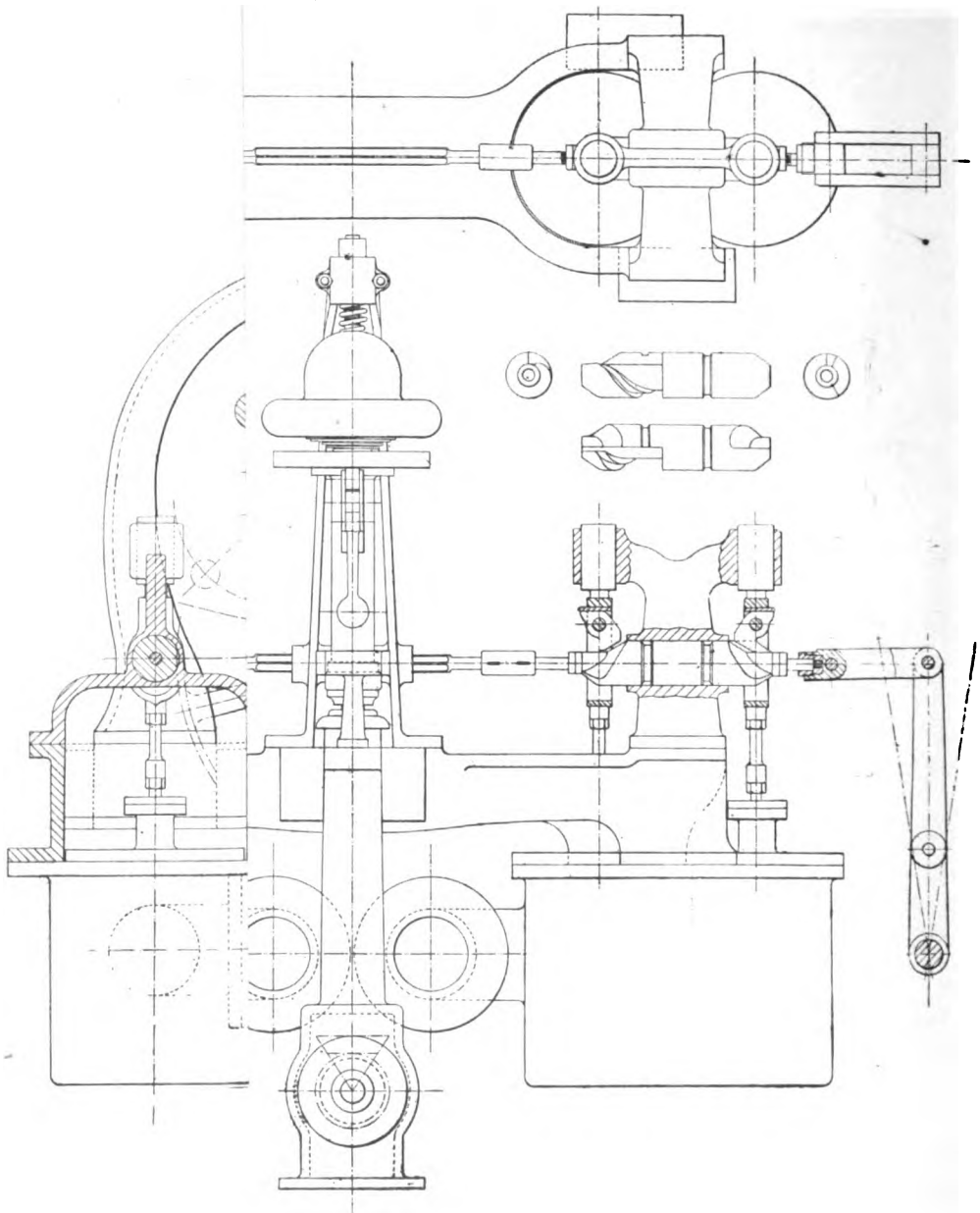

FIG. 434.

GEAR.

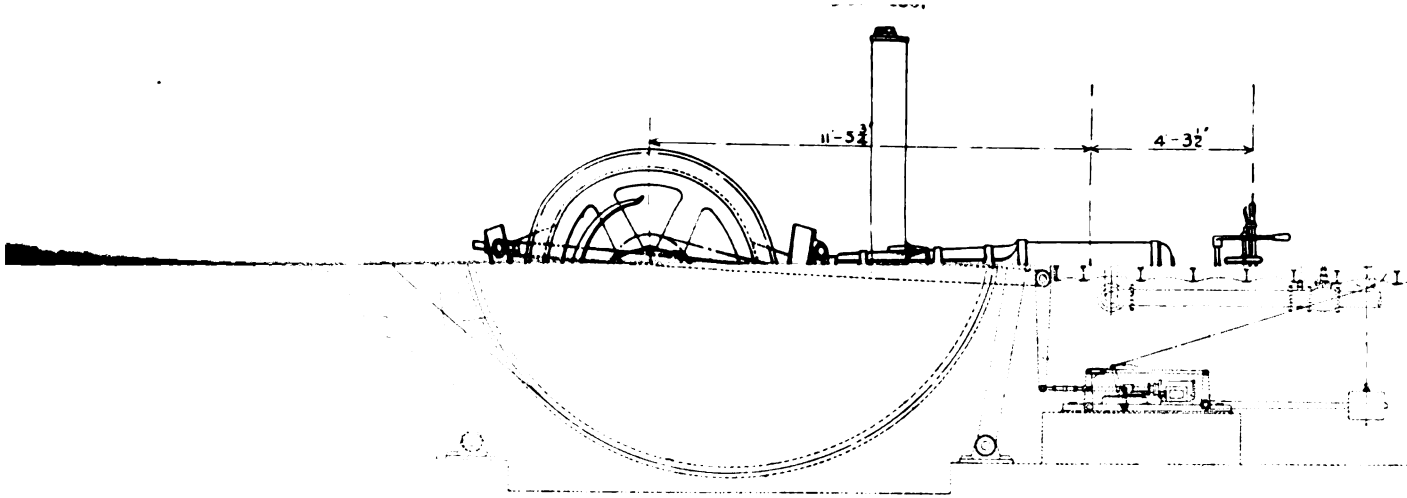

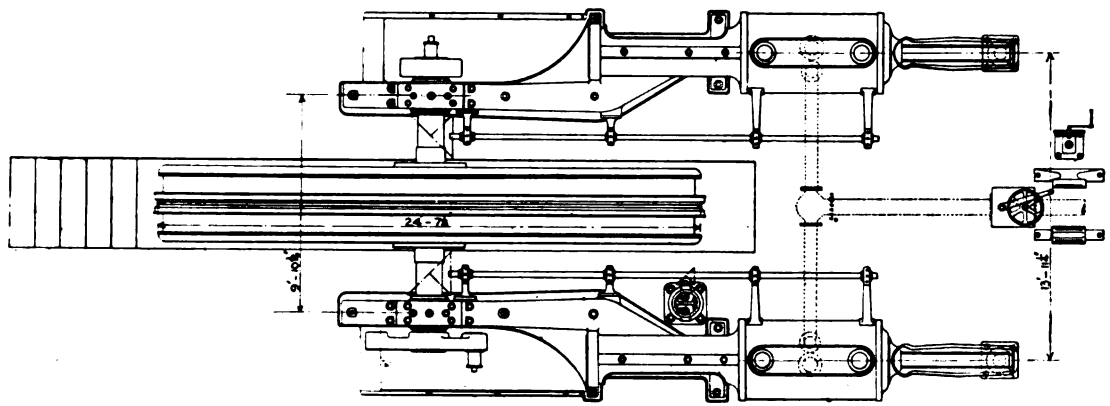

PLATE XXXII.

FIG. 438.

FIGS. 437 AND 438.—KOEPE SYSTEM WINDING ENGINE, BY THE HUMBOLDT COMPANY.

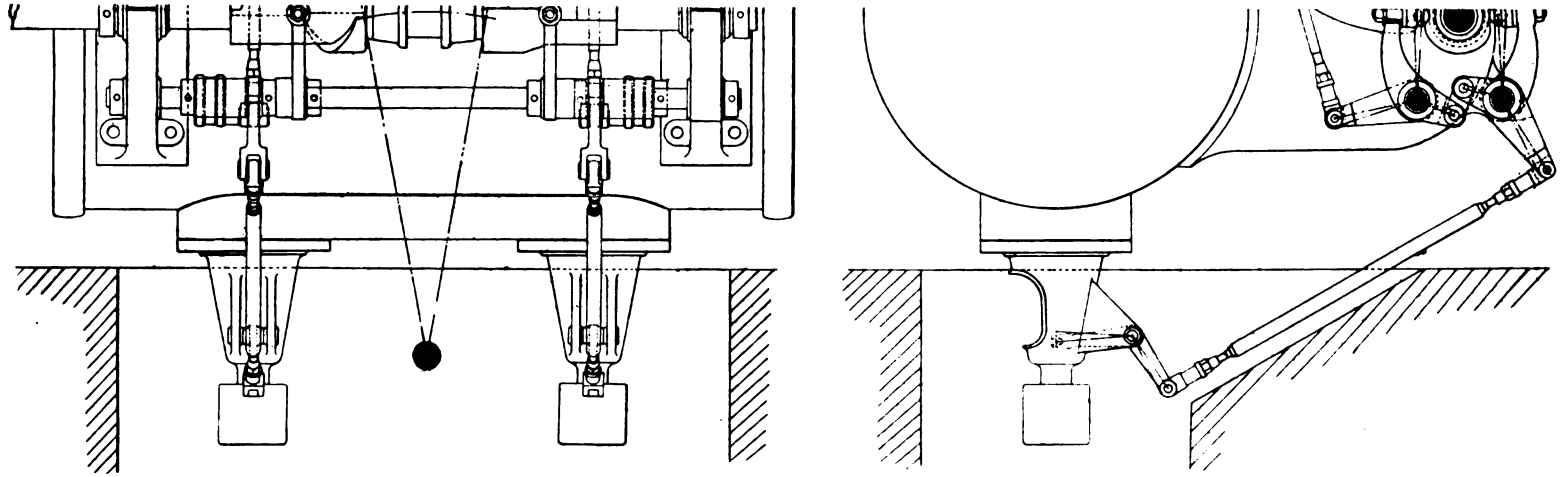

FIGS. 441 AND 442.—KOEPE WINDING ENGINE—KRAFFT VALVE GEAR.

suspended by a rope wound on a small windlass, and held by a pawl or trigger arrangement, which on being freed allows the weight to drop and thus apply the brake. Both engines have trunk guides and one (fig. 438) with balanced cranks.

The valve gear of the engine shown in figs. 435 and 436 consists of the ordinary eccentric and link motion working slide valves, but the valve gear in the engine shown in figs. 437 and 438 is of an entirely different type, and is shown in figs. 441 and 442. It is the "Krafft" valve gear, and one that is much used abroad.

As will be seen from fig. 438, a horizontal shaft is supported in bearings from the engine frame, which is driven by means of a pair of mitre wheels by the engine crank shaft, and to this horizontal shaft is mounted the gear which actuates the valves as shown in figs. 441 and 442.

A pair of cam discs is fitted to the shaft between the two bearings at the cylinder end, which operate the valve through the medium of the connecting levers shown. The ends of the levers which directly communicate the motion from the cams are furnished with rollers which run over the face of the cams. In this case the steam valves are fitted to the top of the cylinder and the exhaust valves to the underside, but the four valves can be arranged in a box at the side equally as well. There are four cams to each cylinder—two for the steam and two for the exhaust valves, or two each for the backward and forward motions—and the engine is reversed by moving these cams backward or forward, according to the direction the engine is required to run, and when the cams are centrally situated—corresponding to the middle position of the die in the ordinary reversing link—all the valves are closed.

The valves are of the Cornish type, and are almost in complete equilibrium, so that they require but little power to work them, and by varying the position of the cam controlling the steam valve, cut-offs up to 98 per cent. can be attained.

Whilst the Koepe system, as previously stated, was primarily designed in order to do away with a heavy drum, yet in order to secure sufficient frictional resistance between the rope and pulley to deal with fairly heavy loads and avoid slipping, it has been found necessary to make the pulleys of large diameter, in order to increase the length of the arc of contact, which has necessitated pulleys of such a weight that their advantages in point of lightness are to a great extent lost. Latterly flat ropes have been used, which increases the area of contact and tends to reduce the diameter of pulley; and as there is no over-coiling, as in the case of a reel drum, the stitching wires are not broken to the same extent, and consequently, in this respect, the ropes should last longer; and as the ropes are balanced, their weight is scarcely an objection, except in so far as they increase the weight of the mass to be set in motion, which, however, may be of considerable importance; but otherwise there is no advantage in using flat ropes, and it is

questionable if their adoption in preference to round ones leads to any better results. Another objection is the tendency to slip, and whilst the indicator—if driven positively by the engine—is supposed to correctly indicate the position of the cages, owing to the slipping this is not so, and consequently the indicator has to be frequently adjusted. For this reason the Koepe system is not suitable for shallow, quick winding, as it is evident if full steam be quickly put on the engine, the tendency will be for the pulley to revolve without moving the rope, much in the same way as the wheels of a locomotive will slip when starting. A very great deal then depends upon the engineman. Further, once the cages are in motion and running at full speed they cannot be quickly stopped without a tendency to slip. But for heavy weights and a very slow speed of winding, the system is eminently suitable, as the engine may be started and stopped slowly, and there will be little or no slip.

A great objection against the system is that, should the rope break, both cages would fall to the bottom of the shaft, and the fact that in the case of such an event happening neither cage would be available for shaft work, whereas an ordinary winding engine is usually sufficiently powerful to raise and work a single cage. Against this, however, it is urged that this objection can be met by employing two safety ropes, or by employing two winding ropes and a double-grooved pulley with four headgear pulleys, but such means cause the system to lose its feature of cheapness and simplicity, and additional ropes mean that the balance rope must be heavier, and the masses to be set in motion are all considerably increased. Further, if stops or keps are used at the surface, the cage resting on the keps causes the rope to lose its friction, or at any rate that amount due to the weight of the cage, as by slinging the balance rope by a long rod through the cage, or by bridle chains or rods by the sides, the weight of the balance rope may be continuously on the driving pulley.

On the whole, it is really very questionable whether the Koepe system would be cheaper, in point of first cost, than a well-designed partly conical cylindrical drum with balanced ropes, and from a rope point of view certainly the latter would appear to be preferable. Probably the chief advantage claimed for the Koepe system is that no overwinding can occur, as, so soon as the descending cage rests upon the bottom, part of the weight is removed from the rope, and the driving pulley begins to slip.

In order to increase the friction and reduce the slip, it was proposed by Mr. Craven to employ a double-grooved driving pulley, and an intermediate pulley mounted upon a frame with sliding carriages which could be adjusted. One end of the rope is attached to one of the cages, and passes over the headgear pulley to the underside and over one of the grooves on the driving pulley, then over the inter-

FIG. 443.

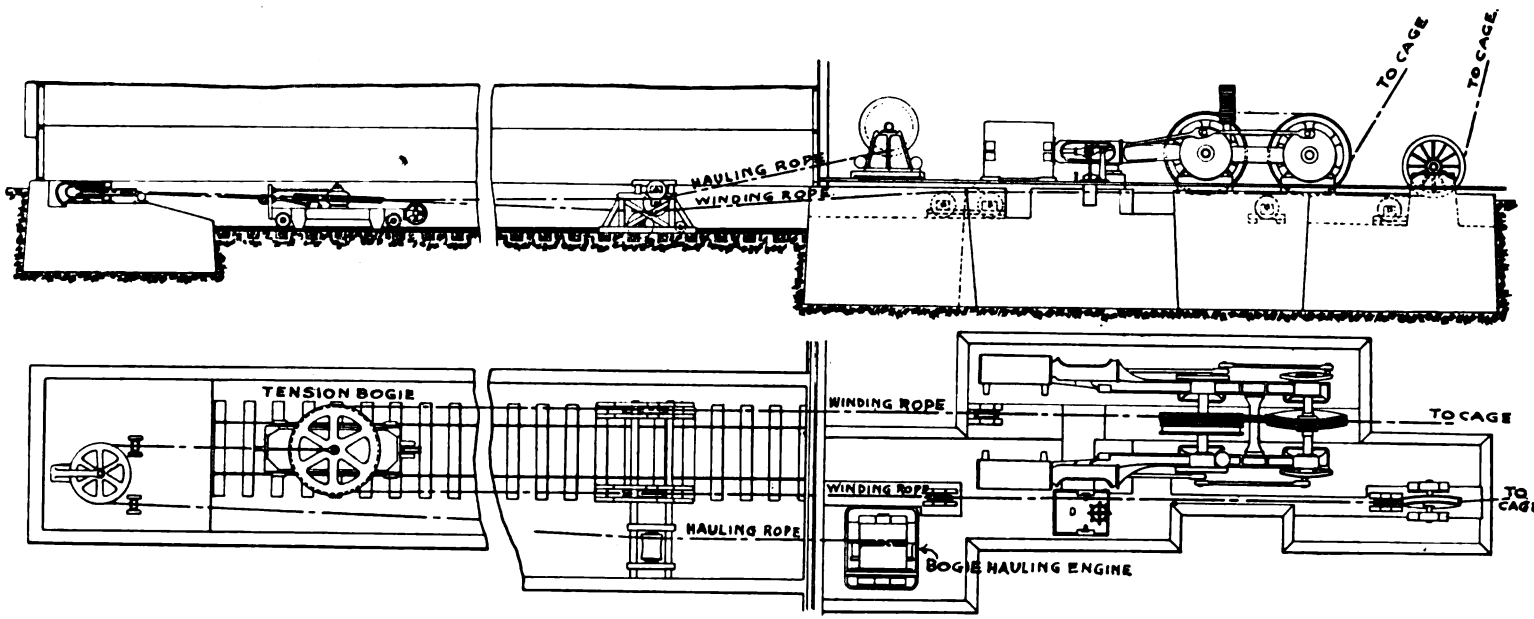

FIG. 444.

ARRANGEMENT OF WHITING HOIST.

mediate pulley, and back to the driving pulley, where again it passes under and over, thence over the other headgear pulley where the rope is attached to the other cage. The arrangement, however, does not appear to have met with favour.

A more important modification is the "Whiting" system, which has been adopted in America and also in South Africa. It is particularly adapted for deep inclined mines, such as are often met with in metal mines. Figs. 443 and 444 show two views of the general arrangement.

As will be seen, two driving pulleys are provided tandem fashion, one being secured to the crank shaft of the engine, whilst the other is driven by coupling or connecting rods. Both pulleys are provided with a number of rope grooves, and the front pulley is not vertical but is set at a slight angle to facilitate the lead of the ropes, the inclination being such that a rope leading off the bottom of one groove will be delivered on the top to the next groove, so that there is no abrasion of the rope, and the coupling rods are specially constructed to allow for the inclination. The rope then is attached at one end to the cage or skip, passes over the headgear pulley to the underside of the front driving pulley, thence three or four times around both pulleys, and then leads back to a return sheave mounted on a tension bogie or carriage, and then from a fixed pulley on the surface to the other headgear pulley, where the other end is attached to the other cage or skip. It is often necessary to wind from different levels in metal mines, and hence the *raison d'être* for the travelling tension bogie, and it will easily be seen that as the bogie is moved along the track the winding ropes in the shaft may be shortened or lengthened as required, to suit the different levels. Where this adjustment is not necessary the tension bogie is not required. A powerful hauling engine is necessary to move the bogie, and whilst ordinary winding is in progress it is clamped to the rails forming the track.

A pair of tandem compound Corliss valve winding engines of this type, by Messrs. Fraser and Chalmers Limited, is shown in figs. 445 and 446. It was the usual practice to line the grooves of the driving pulleys with wood, but these rapidly wear away, and the driving pulleys of the engines shown are fitted with Walker's patent differential rope pulleys. It is found that when a rope makes a number of turns around a solid grooved pulley, the grooves wear unequally, and, moreover, when the pulley is running with grooves of slightly different diameters, excessive strains are set up in the rope. In the Walker differential pulley, these objections are eliminated by forming each groove on an independent ring, which is free to rotate on the pulley centre. Figs. 447 and 448 show two views of the driving pulley as fitted to these engines, and from the section (fig. 447) it will be seen how the five separate rings are held in place and pressed against each other by the outer covering plate or flange, which causes sufficient friction to

Fig. 445.

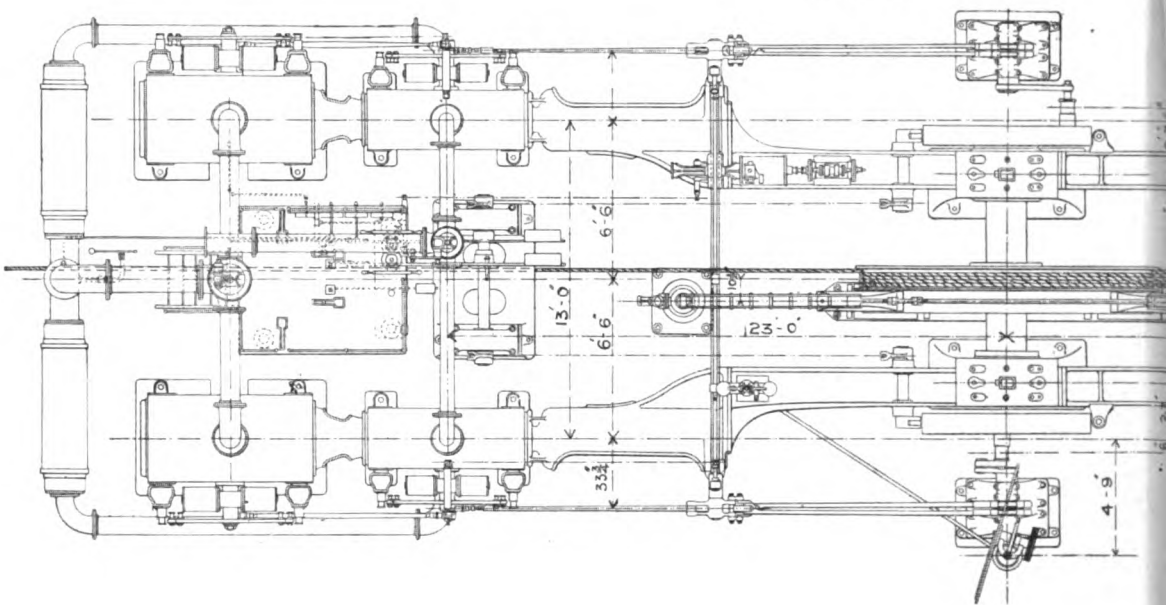

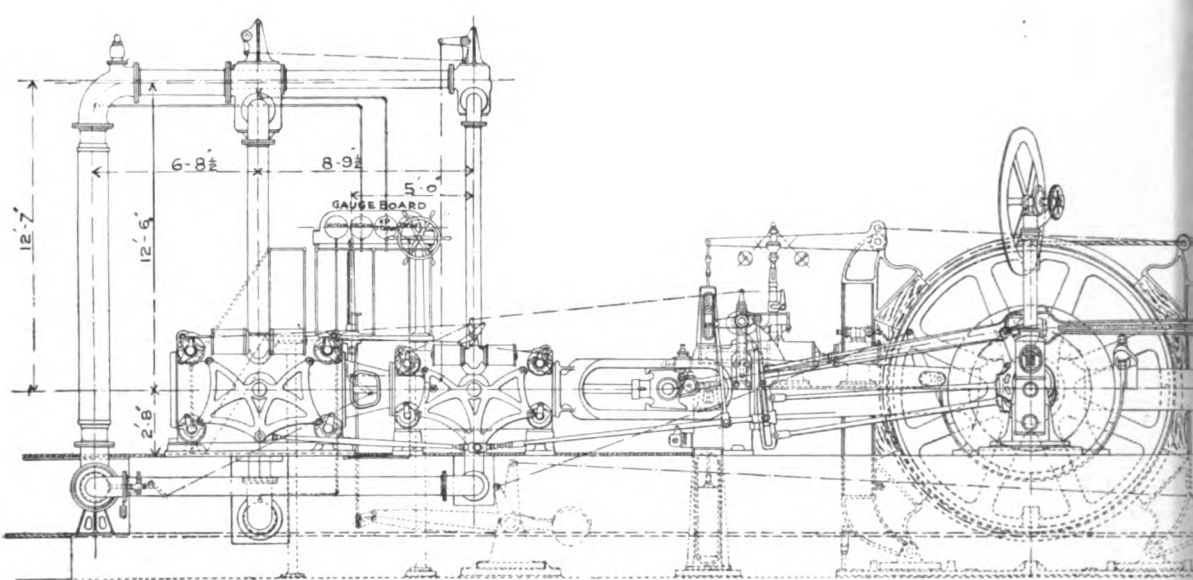

Fig. 446.

Whiting Winding Engines, by Messrs. Fraser and Chal

PLATE XXXIV.—(*To face page 212*).

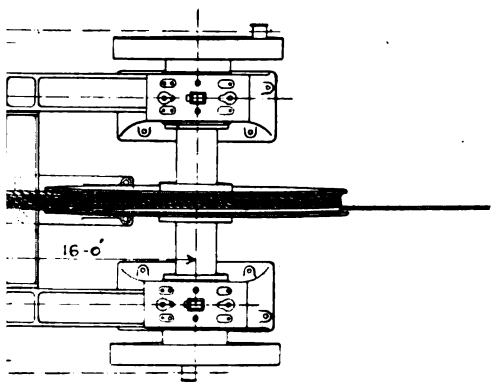

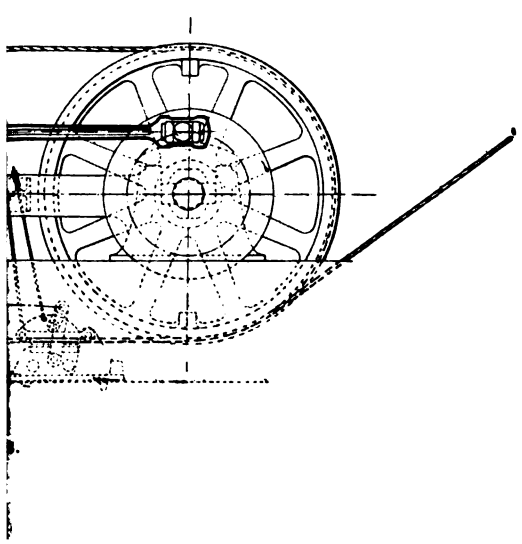

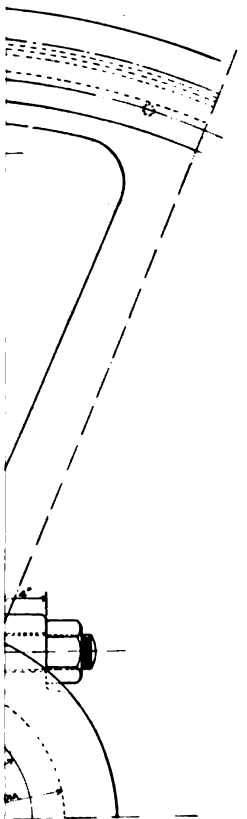

transmit the power of the rope; but to prevent cutting, provision is made for a slight lubrication through the holes as shown. These pulleys are made in halves, and the method of joining the rings together is shown in figs. 449, 450 and 451.

The valve gear is placed on the outer side of the cylinders, and worked by eccentrics driven by a drag crank, a method which is also sometimes adopted on ordinary winding engines. There is no steam receiver, the steam pipes being of sufficient capacity to render this unnecessary. Two steam stop valves are provided, as will be seen on fig. 446, above the driver's platform, both being connected and worked by the same lever, and a small reducing valve is also coupled up to this starting lever, so that when the engines are standing, the low-pressure steam pipes are supplied with steam from the main steam pipe. On the stop valves being opened, however, this valve is closed. A gauge board is fixed to the handrail of the platform, showing the steam pressures, &c., in the various pipes of the engine.

A powerful steam brake, acting on the main driving pulley, is provided, as well as half-band brakes to each of the crank discs worked by foot. In addition, there is provided a powerful rope brake or clamp, which, in case of the rope breaking, can be quickly applied by the handwheel on the driver's platform to prevent the other cage falling. This clamp is fixed between the pulleys, and grips the three or four ropes upon them.

The frictional resistance depends upon the tension on the rope, the co-efficient of friction and the arc of contact, and their relation are expressed by the formula :—

$$\frac{T_1}{T_2} = \epsilon^{f\theta}$$

Where
T_1 = the tension on loaded rope.
T_2 = the tension on unloaded rope.
ϵ = 2·718, the base of the natural log.
f = co-efficient of friction.
θ = arc of contact.

As common logarithms are more convenient the expression becomes

$$\text{Com. log. } \frac{T_1}{T_2} = 0{\cdot}434\, f\theta \text{ if } \theta \text{ is in circular measure} = \text{degrees} \times 0{\cdot}01745.$$

$$\text{Com. log. } \frac{T_1}{T_2} = 0{\cdot}007578\, f\theta \text{ if } \theta \text{ is in degrees.}$$

The co-efficient of friction for a wire rope running on a cast iron pulley may be taken as 0·1, for a wire rope running on a grooved pulley lined with wood or leather as 0·2. In order to obviate slipping

$$\text{Com. log. } \frac{T_1}{T_2} \text{ must be less than } k\, f\theta.$$

Where k = the constants given above, and where this condition is not fulfilled, either the ratio $\frac{T_1}{T_2}$ must be reduced by increasing the weights on one or both ropes

hanging in the shaft—and it may be noted here flat ropes, owing to their greater weight, lend themselves to this end—or the factors f or θ must be increased. f, however, is usually determined, and consequently θ is the usual factor which is increased—as, for instance, in the "Whiting" system—by passing the rope several times over the two driving pulleys.

In such a case

$$\theta = \phi n,$$

where ϕ = the arc of contact of one groove,

and n = the number of grooves in use in the pulleys when both are driven.

If only one pulley is driven, then n = the number of grooves in the driving pulley.

To take an example, let the following data of a simple Koepe winding pulley be assumed. Weight on loaded rope:—

	Lb.
Rope	4,250
Cage, &c.	4,480
Tubs	3,360
Coal	4,480
Total	16,570

Weight on unloaded rope:—

	Lb.	
Rope	4,250	seeing the ropes are balanced.
Tubs	3,360	
Cage, &c.	4,480	
Total	12,090	

Then $$\frac{T_1}{T_2} = \frac{16,570}{12,090} = 1{\cdot}37,$$

and Com. log. of $1{\cdot}37 = 0{\cdot}1367206$,

Then assuming the arc of contact embraced by the rope to be 180 degs., or in circular measure,

$$180 \times 0{\cdot}01745 = 3{\cdot}14,$$

and taking this quantity, the co-efficient of friction required to prevent slipping will be

$$f = \frac{0{\cdot}1367206}{1{\cdot}36276} = 0{\cdot}1,$$

and as the co-efficient of friction of a pulley lined with wood may be taken as 0·2, it is easily seen the conditions necessary for non-slipping are fulfilled. Without the wood lining, however, it would be necessary to adopt grooved pulleys, or increase the weights to reduce $\frac{T_1}{T_2}$, or reduce the net weight to be raised.

The Whiting system is one more especially adapted for deep mining, and has been used to a great extent for this purpose.

In deep winding with separate ropes attached to an ordinary cylindrical drum, in order to avoid the over-coiling of the rope, the drum must be made either of very large diameter or of great width. The former is objectionable owing to the inertia, and large engines required; spiral drums being decidedly so on account of inertia effects alone. Wide drums, on the other hand, are objectionable owing to the excessive angling and side friction of the rope. The Whiting system, therefore, by dispensing with the drum, at once gets rid of these difficulties; but the objections to both cages depending upon one rope, and the greater danger that defects in construction might occur in a single rope of the required length, still remain.

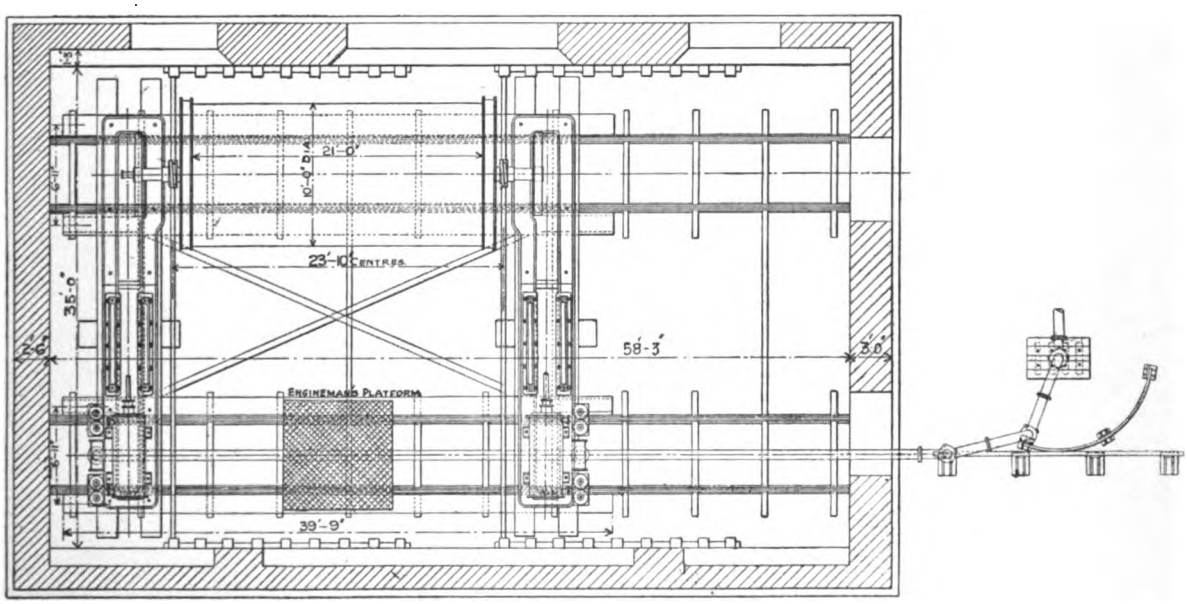

FIG. 452.—MORGANS' TRAVERSING WINDING ENGINE.

To remove the difficulty of excessive angling of the rope, in connection with a wide drum, the late Mr. Wm. Morgans designed the traversing winding engine shown in figs. 452, 453 and 454, and which is installed at the Williams shaft, Dolcoath Mine, Camborne. As will be seen, the engines and drum are mounted upon a movable carriage capable of travelling in a direction at right-angles to the coils of the rope, and is so arranged that at each revolution of the drum it is moved horizontally through a distance equal to the thickness of the rope. The ropes, therefore, always remain in line with the headgear pulleys.

The depth of the shaft when finished will be 3,000 ft., and the loaded cage and tubs will weigh 6¾ tons, the time occupied in winding being 1 minute 42 seconds. The drum is 10 ft. diameter by 21 ft. wide, and coupled direct to the engines, which have cylinders 24 in. diameter by 60 in. stroke, the steam pressure being 140 lb.

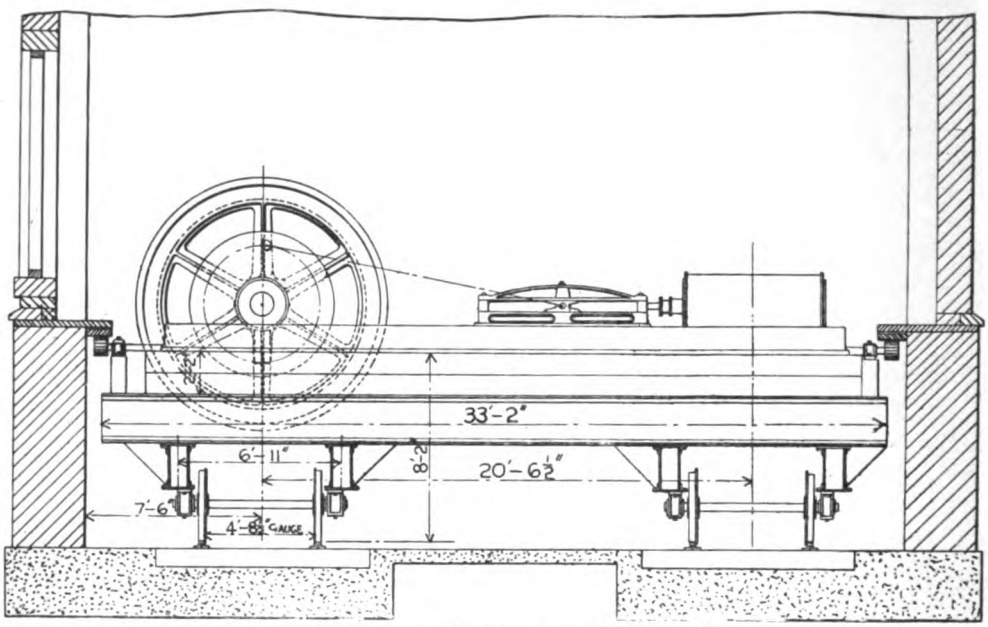

FIG. 453.—MORGANS' TRAVERSING WINDING ENGINE.

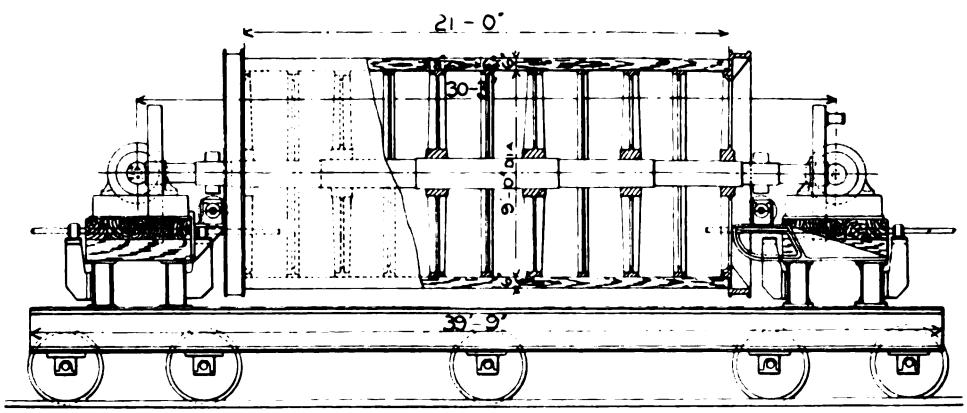

FIG. 454.—MORGANS' TRAVERSING WINDING ENGINE.

The average piston speed for the whole wind is 550 ft. per minute. The valve gear is of the Cornish equilibrium type, worked from eccentrics driven by a drag crank.

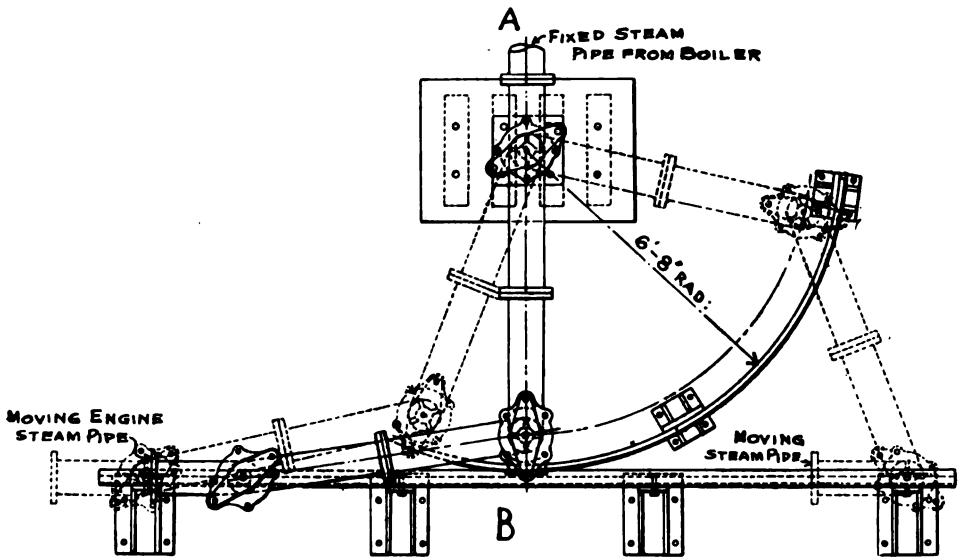

Fig. 455.

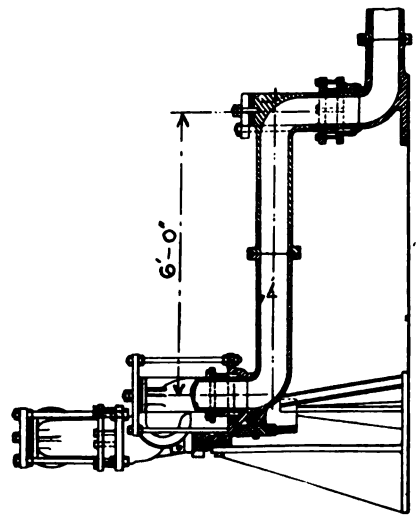

Fig. 456.

Moving Steam Pipe for Traversing Winding Engine (*see* page 219).

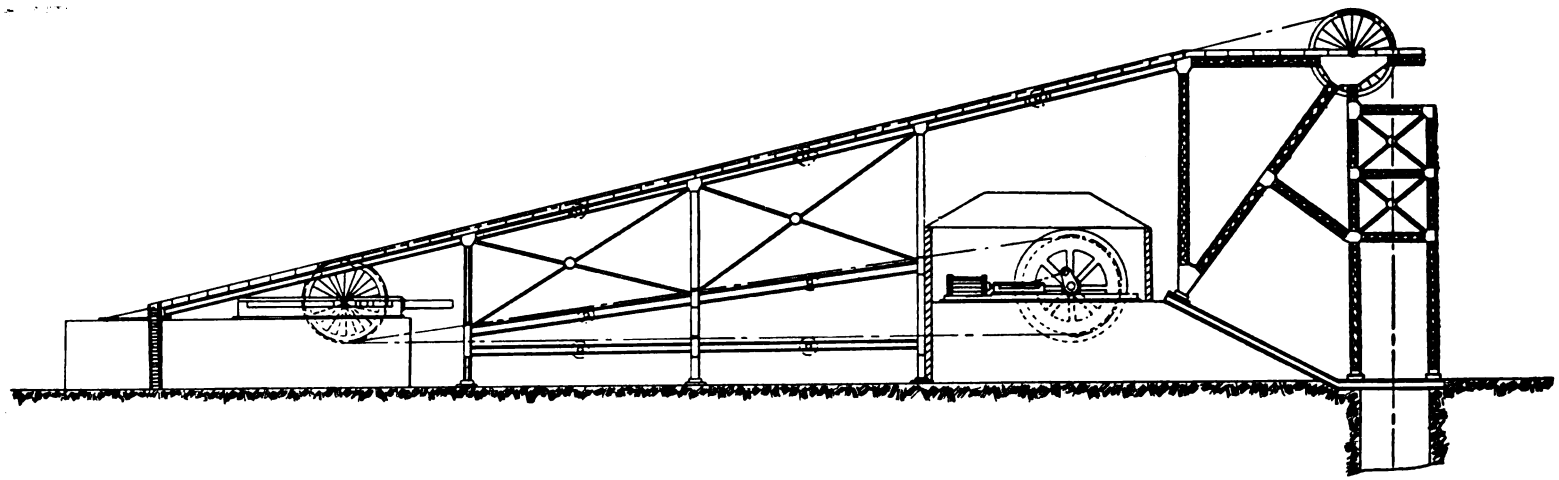

Fig. 457.

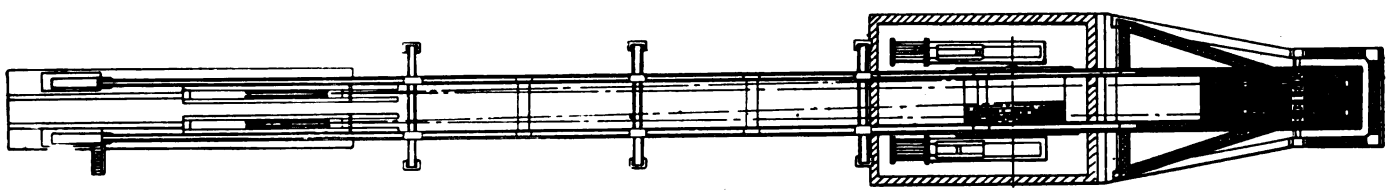

Fig. 458.

Figs. 457 and 458.—Wallace's Arrangement of Winding from Deep Mines.

The carriage is of built-up girders, mounted upon twenty flanged wheels, 3 ft. in. diameter, which run on two railway tracks of 4 ft. 8½ in. gauge, formed with flange rails weighing 68 lb. per yard. The rails are bolted to steel girder transverse sleepers 5 ft. apart, embedded in concrete. The engine bedplates are of cast iron, and are mounted upon this carriage with two layers of timber intervening to reduce vibration. The traversing of the carriage is effected through the medium of two worms fixed to the crank shaft of the engines, one on each side of the drum, which gear into worm wheels mounted on horizontal transverse shafts as shown in fig. 452. At each end of these shafts is keyed a pinion wheel which gears into an inverted rack attached to the engine house walls, and which run parallel with the track.

Figs. 455 and 456 show the arrangement of moving steam pipes, fig. 456 being a section through the line A B, and in fig. 455 the dotted lines show the position of the pipes at the commencement and end of the traverse. As will be seen, a track is provided upon which the moving steam pipes are carried or guided. There are no sliding joints, only revolving ones, and in order to reduce friction, ball bearings are introduced under the cross bars which hold the pipes in the glands, A semi-metallic packing is used in packing the glands, and no trouble has been experienced in keeping the joints steam-tight.

Another arrangement to overcome the excessive angling of rope is that shown in figs. 457 and 458, designed by Mr. John Wallace, particulars of which have been supplied by Messrs. A. Barclay, Sons and Co. Limited.

In this arrangement the drum is sufficiently large both in diameter and width to accommodate the rope, and the winding engine is placed as close to the winding shaft as is conveniently possible. The ropes, however, are not led directly to the drum, but are carried back for some distance behind the engine house, to guide pulleys, and from these pulleys are led back to the drums, an overhead frame being provided to carry rollers for supporting the ropes.

Figs. 459 to 461 shows a proposed arrangement for traversing the pulley—by means of a fixed nut and revolving screw—for the purpose of still further reducing the angling of the rope; and fig. 462 shows another arrangement with revolving nut and fixed screw for the same purpose. By these means the distance of the guide pulleys from the shaft may also be reduced.

The guide pulleys may also be arranged for longitudinal movement for the purpose of adjusting the position of the skips or cages so that they are brought to their respective landing points simultaneously. Figs. 463 to 465 show an arrangement whereby the pulley is moved by means of an hydraulic ram, and fig. 466 in which a screw worked by a worm and worm wheel is used to attain the same object.

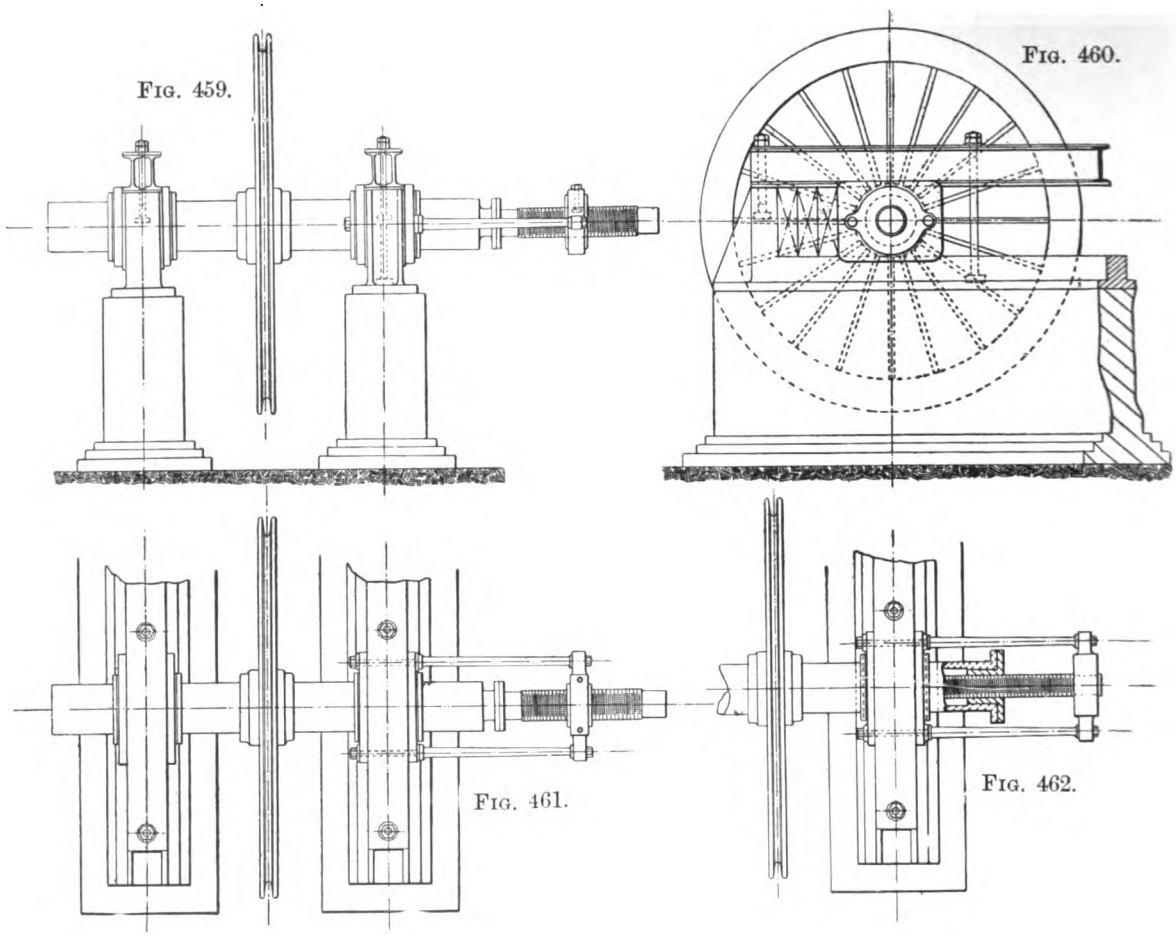

Figs. 459 to 462.—Guide Pulleys of Wallace's Arrangement.

Fig. 463.

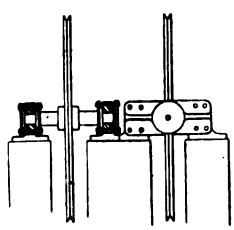

Fig. 464.

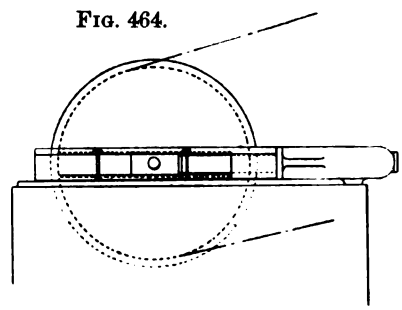

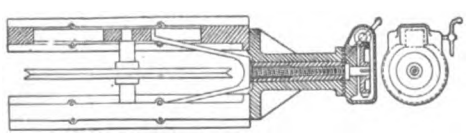

Fig. 466.

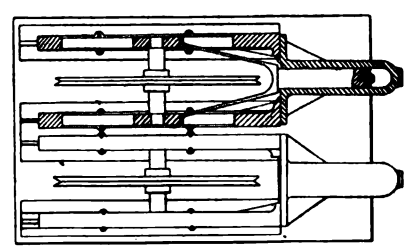

Fig 465.

Figs. 463 to 466.—Methods of Adjusting Guide Pulleys for Taking up Rope.

The advantages claimed for this system are that the engine is close to the shaft, the drum is fixed, and the engineman may be in a position to see the landing of the cages, and there may be little or no angling of the rope. On the other hand, the rope is lengthened, the bending strains are increased, and for a deep shaft a large and heavy drum will be necessary.

With reference to deep mining the weak point is not in the mechanical arrangements, but in the rope, as a point is soon reached where the weight of rope is equal to the working load. Taper ropes are suggested; and whilst by means of taper ropes the depth for a given load may be somewhat increased, the risk of defects in manufacture, and necessarily lower factor of safety, are sufficient and potent reasons for rendering their use objectionable. It is to be remembered that where the lives of men depend upon the soundness and reliability of the ropes, every precaution that can possibly be thought of should be taken to eliminate risk.

Possibly the best, safest and most economical arrangement for deep mining would be to have two shafts, one an off-set from the other, at half the depth. The shaft should be large in diameter, or if rectangular, fairly wide to admit large cages or skips, and the aim should be to raise as heavy a load as possible at a slow speed, the two engines and sets of cages working simultaneously; the mid-depth engine would be electrically driven, and if both were electric winders, both might be controlled by one man at the surface. The ropes being short, the same chance of defects as in a long rope does not occur, and a much greater factor of safety may be obtained; the speed being slow and the load heavy, the ropes are not subject to the same shocks as might occur if a high speed of winding were desired. It has been shown that a light load and a high speed is not so economical in power as when the load is increased and the speed is reduced. The same applies to ropes, not of course with regard to actual power, but with regard to the enhanced benefits and longer life resulting from steadier and more even usage and more uniform strains coming upon it.

In the following formulæ for the design of winding engine constructional details let.

D = Diameter of cylinder in inches.
P = Maximum pressure of steam in pounds per square inch.
A = Area of piston.

Cylinder.—The thickness of the cylinder does not so much depend upon the strength required merely to resist the steam pressure, as upon the facility of obtaining sound castings, allowance for re-boring, and strength to resist any alteration in form, when resting upon feet at each end in a horizontal position. Frequently a tail piston rod is supplied to support the weight of the piston, which

would otherwise be supported in the barrel of the cylinder—tending to distort it. The thickness, however, which allows for re-boring, usually is of sufficient strength to allow for any other strains, and may be taken as

$$t = 0{\cdot}025\ \mathrm{D} + 0{\cdot}5 \text{ to } 0{\cdot}04\ \mathrm{D} + 0{\cdot}5$$

where t = thickness of cylinder in inches.

Thickness of flanges $t = t \times 1{\cdot}2$ to $t \times 1{\cdot}3$.
Thickness of cover $= t_c = t$ to $t \times 1{\cdot}1$

when the covers are a single thickness, as in small cylinders. Larger covers have outside strengthening ribs, and large covers are made cellular or hollow with radial ribs between the flat sides, or dished and strengthened with ribs. In the case of a dished cover the piston is shaped in a similar manner to fit, in order to avoid excessive clearance.

Bolts or Studs.—The number of bolts or studs may be taken as

$$n = {\cdot}7\ \mathrm{D} \text{ to } {\cdot}8\ \mathrm{D}.$$

Where n = the number, and the diameter may be

$$d = \sqrt{\frac{\mathrm{P\,A}}{n \times 4{,}000}}$$

when d = the diameter at the bottom of the thread.

The width of flanges may be from three to three and a-half times d.

Piston and Rod.—Diameter of piston rod, p_r.

$$p_r = {\cdot}0167\ \mathrm{D}\ \sqrt{\mathrm{P}}$$

The depth of piston varies considerably, but may be from

$$0{\cdot}2\ \mathrm{D} \text{ to } 0{\cdot}25\ \mathrm{D}.$$

Connecting Rods.—The small end of the connecting rods are often made the same diameter as the piston rod, or may be

$$\mathrm{C}_r = 0{\cdot}018\ \mathrm{D}\ \sqrt{\mathrm{P}}$$

where C_r = the diameter at the ends. They are usually larger in diameter at the middle of their length, and the taper from the end to the centre may be taken as $\frac{1}{8}$ in. per foot. The length of connecting rods should be from two and a-half to three times the stroke.

Crosshead Pin.—The crosshead pin is really a journal, and though transmitting the same stress as the crank pin, is supported on each side, and may therefore be less in diameter.

Its diameter C_p may be

$$\mathrm{C}_p = {\cdot}021\ \sqrt{\mathrm{P\,A}}$$

and its length

$$l_p = \frac{\mathrm{P\,A}}{800\ \mathrm{C}_p}$$

Crank Pin.—Taking the pressure upon the journal at 750 lb. per square inch, then the required area a of bearing surface

$$a = \frac{\frac{3}{4}PA}{750} = d_k l_k$$

where d_k = the diameter, and l_k the length of the crank pin. Its diameter d_k may be

$$d_k = 0{\cdot}03 \sqrt{PA}$$

For small engines, however, the pressure per square inch on the bearing may be taken somewhat less, and for large engines higher than the value given; it varies from 400 lb. to 800 lb. or 1,000 lb.

Crank Shaft.—The determining dimensions of the crank shaft are those of the journal, which must be large enough to resist the twisting and bending strains exerted by the piston upon the crank pin and the bending strain due to the weight of the drum and the pull upon the ropes. As a rule, the latter is a small proportion of the weight of the drum and may therefore be neglected. Let

a = Distance between centres of crank-shaft journals in inches.
b = Horizontal distance from centre of crank shaft journal to centre of crank pin in inches.
c = Shortest distance from centre of boss or nave of drum side to centre of journal in inches.
d = Distance from centre of boss to other journal so that $c + d = a$.
w = Weight of drum in tons.
r = Radius of crank.

Then the load m upon the shaft journal due to the drum will be

$$m = \tfrac{1}{2} w \times \frac{d}{a}$$

and the equivalent twisting moment t of the bending and twisting strain due to the pressure upon the crank pin will be

$$t = \frac{PA}{2 \times 2{,}240} \left\{ b + \sqrt{(b^2 + r^2)} \right\}$$

then the equivalent twisting moment T due to m and t will be

$$T = \sqrt{m^2 + t^2},$$

and diameter of journal d

$$d = \sqrt[3]{\frac{10{\cdot}2}{5}} \sqrt[3]{T}$$

or

$$d = 1{\cdot}26 \sqrt[3]{T}$$

The length of the journal varies from $1{\cdot}5d$ to $2d$, but should be long enough to limit the pressure upon the bearing to 400 lb. per square inch.

If the shaft is required to be hollow, then the increased diameter necessary to allow for the hole, when the dimensions of the latter are given in terms of the diameter of a solid shaft

$$d_{ex} = \sqrt[3]{\frac{d}{1 - \left(\frac{d_{in}}{d}\right)^4}}$$

When d_{ex} = the external diameter of the hollow shaft, equal in strength to d in inches

d = the diameter of solid shaft in inches.

d_{in} = diameter of hole through centre of shaft in inches.

Guide or Motion Bars.—The area of the slide blocks should be sufficient to limit the pressure upon the guide bars to 50 lb. per square inch. The maximum pressure ρ upon the block will be

$$\rho = \frac{PA}{n}$$

$$\text{where } n = \frac{\text{length of connecting rod}}{\text{radius of crank}}$$

and the pressure per square inch p will be when a = the area of the slide block

$$p = \frac{\rho}{a}$$

when there is only one block, and

$$p = \frac{\rho}{2a}$$

when there are two.

Valves, &c.—Steam pipes, valves and ports should be of sufficient area to limit the velocity of the steam to 80 to 100 feet per second. Some makers go as high as 120, but 100 should be taken as a maximum for good results. The exhaust pipes and valves should be designed for a velocity of from 60 to 80 feet per second.

Drums.—Probably in the great majority of cases drums, and especially those of cast iron, are very considerably stronger and heavier than they require to be. This no doubt is due to the difficulties in casting, and a large factor of safety is necessary to allow for stresses due to contraction in cooling. Instead of casting the drum side in one piece or in halves as is usual, a drum built up in sections, even of cast iron, would weigh less, and if built up of steel sections, very much more so.

Let P = Pull on the rope due to the net weight of coal and rope in pounds.

R = Radius of drum in inches.

N = Number of arms.

Then each of the arms may be taken as a cantilever, whose bending moment would be

$$M = PR$$

if there were only one, but as there are several, M may be taken as

$$M = \frac{PR}{N}$$

which will slightly exaggerate the actual strength, as the arms are not free at the rim end, and no allowance is made for the strength of rim.

If Z = the modulus of the section, and
f = stress allowed in the material

then

$$fZ = \frac{PR}{N}$$

The values of Z for different sections in ordinary use are as follow :—

Section.	Modulus.
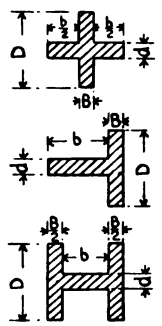	$\frac{1}{60}(BD^3 + bd^3)$
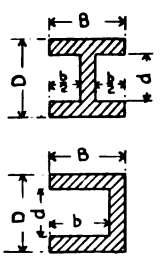	$\frac{1}{60}(BD^3 - bd^3)$

f may be taken as 3,000 for cast iron and 6,000 for steel.

The drum cleading is usually of hard wood staves, mild steel plate, cast iron, or a combination of steel plate and wood staves, or steel plate and cast iron, or steel spiral grooved plate. The latter form, however, is seldom adopted. The drum cleading may be designed from the following formulæ. Let

W = total dead weight upon the rope in pounds.
P = pressure per square inch upon drum cleading.
D = diameter of drum in feet.
R = radius of drum in inches.
d = diameter of rope in inches.
t = thickness in inches.
C = Constant = 200 for wood, 24,000 for steel plate, and 12,000 for cast iron.
L = Distance between supports in feet.

Then $$P = \frac{W}{Rd}$$

and $$t = \sqrt{\frac{PDL}{C}}$$

If drums without a centre support or ring L will = width of drum, with centre ring L = ½ width of drum.

Electric winding at present—for main winding, at any rate—may be said to be in the experimental stage, and so far as this country is concerned has met with but little favour. For small auxiliary winding plants, either on the surface or underground, but more especially the latter, it would no doubt prove economical to take out an existing steam winding engine and replace it with an electric motor. For main winding shafts, however, the adoption of electrical winding plant requires very serious consideration, as, quite apart from any question of economy in steam consumption, there are features of much more importance, such as safety, reliability, ease of handling and upkeep, which require attention.

The chief advantage which has been put forward in favour of electric winding is that of economy in steam consumption, and in order to make the most of this point, comparisons have been drawn from examples of some of the worst steam winding engines instead of the best. That many steam winding engines are extremely wasteful in steam consumption is undoubtedly true, but at the same time they are safe, easily controlled, and will work for years without costing a penny for repairs.

Whether they are wasteful or economical, however, is merely a question of design and handling, which is receiving attention, and by adopting small drums, high piston speeds, counterbalancing, compounding and automatic cut-off gear to enable the steam to be worked expansively, very good results may be, and in fact have already been, achieved. This end, however, is not attained without sacrificing in some degree the simplicity of the engine, as, to get good results, the valve gear must necessarily be more or less complicated and delicate; but at the same time it is to be noted that the same is the case with any engine designed to work with a

low steam consumption, and even with electrical winding, in the end the economy in consumption of steam depends largely upon the complication and delicate construction of the valve gear of the steam engine driving the generator.

The chief source of loss in a steam winding engine occurs during the time the engine is standing, owing to condensation in the steam pipes, the cooling of the steam chests, cylinders, &c., but by placing the engine as near the boilers as is conveniently possible, and giving careful attention to the covering of the pipes, &c., with some good non-conducting composition or material, this may be reduced to a minimum. In the ordinary working of a colliery, it is a difficult matter to keep the supply of coals to the pit bottom perfectly regular from start to finish of the day's work, and necessarily the winding plant, whether it be steam or electric, must stand during "waiting on," as the non-delivery of coals is commonly expressed; it is difficult to see how, instead of the steam rising in the boilers and blowing off, it can be conserved in the form of kinetic energy to any extent during this period.

Again, a steam winding engine is easily controlled and regulated by means of the steam starting valve, and reversing lever. The requisite amount of steam may be admitted to merely move the engine. It can be started, stopped, and reversed, either slowly or quickly, and practically at any point. A good engineman can in fact work his engine without a brake, and when coal drawing, many enginemen never use the brake, merely bringing the engine and cages to rest by reversing the engine and admitting a little steam. As to the merits of this method of working, there is no need to discuss them here; the fact remains that these, together with the certainty and ease of control, are important features in a steam winding engine —especially when the winding is quick—and the question is, Can the same certainty, ease of control and absolute regulation, from merely moving the drum or cage to full speed, be guaranteed by simple certain means in an electrical winding plant? So far, in some instances the regulation is very imperfect, and the motor cannot be started perfectly slowly and smoothly. This, however, is greatly a question of design of the starting apparatus, and in any new installation this point requires careful attention. Another point is the reliability and lasting qualities of the insulation, and, further, the question of sparking and its influence upon the life of the commutator. Those who have had experience with small direct-current motors for various colliery purposes will know that it is sometimes necessary to change the armature and turn up the commutator, and for this purpose it is often usual to keep a spare armature; for small machines this is a matter of little importance, but when dealing with large machines such as are necessary for main winding, the armature is not so easily changed, and a breakdown would probably be a very serious matter.

Whilst no doubt the foregoing may be a somewhat pessimistic view of electrical winding, yet the importance of the operation demands that every care and attention shall be given to the details of construction and dimensions of the plant, to ensure freedom from breakdown and certainty of easy control, irrespective of capital outlay or working cost. So far it has been thought necessary to provide electric winding machines with different automatic apparatus—such as cut-outs and brakes —to enhance their reliability in working, but they should be so designed as to render these unnecessary when in the hands of careful drivers. Too many safeguards tend to lessen "precaution" on the part of the attendant.

As already mentioned, the chief advantage in favour of electric winding is that of economy in steam consumption; and the advisability of installing steam or electricity for winding purposes depends—to a great extent—upon the cost of fuel at the colliery, and the required capital outlay. For instance, if an electrical installation is to include engines and generators, as well as the winding motor, then it may not be worth while to go to the expense of such a plant in order to save a few tons of coal which has little or no market value. There may be a little saving in cost of stoking, and wear and tear of boilers, but this will probably be so slight that it may safely be neglected. On the other hand, if the fuel is of marketable quality, then the adoption of electric driving will no doubt, though entailing much greater capital outlay, justify the expense. Again, where an electricity supply company can deliver current at the colliery at a cheap rate, both capital outlay and working cost may be reduced; on the other hand, the current may often be generated at the colliery at a rate considerably less than it can be supplied at by a supply company. The question then can only be decided after careful consideration of the circumstances of each particular case.

Small electric winding machines usually consist of a small motor running at a comparatively high speed, driving the drum through gearing. The motor may be either a series- or shunt-wound direct-current, or three-phase alternating-current machine. (As electromotors may be dealt with later, it is only necessary to refer briefly to them here). With either of the direct-current machines, very perfect starting and regulating may be obtained by a single lever starting, regulating and reversing switch; though probably a series-wound motor, on account of its large starting torque and—though wasteful—ease of control will probably prove most suitable for small plants. A direct-current shunt-wound motor may be more economically controlled by introducing a resistance into the field excitation circuit, or a combination of the shunt and series forming the compound motor may also be adopted. Ordinarily the control is effected by putting resistance in the armature circuit, in which case energy is wasted in heating the resistance, but owing to its simplicity this method will no doubt continue to be used for small motors. A better

and more economical regulation would be obtained from a double-commutator compound-wound motor, with a "series-parallel" method of control. Three-phase motors can only be used by the adoption of slip-rings and wound rotors, so that

FIG. 467.

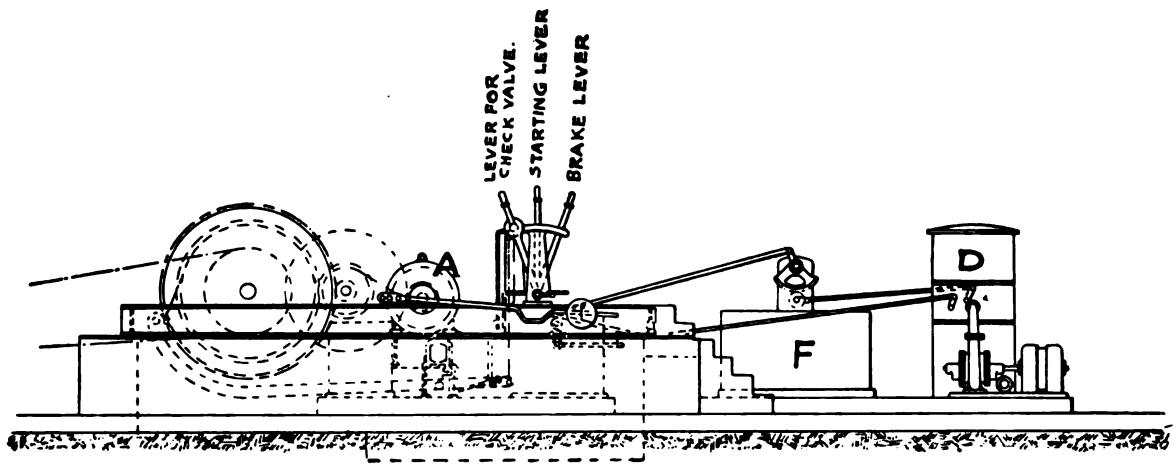

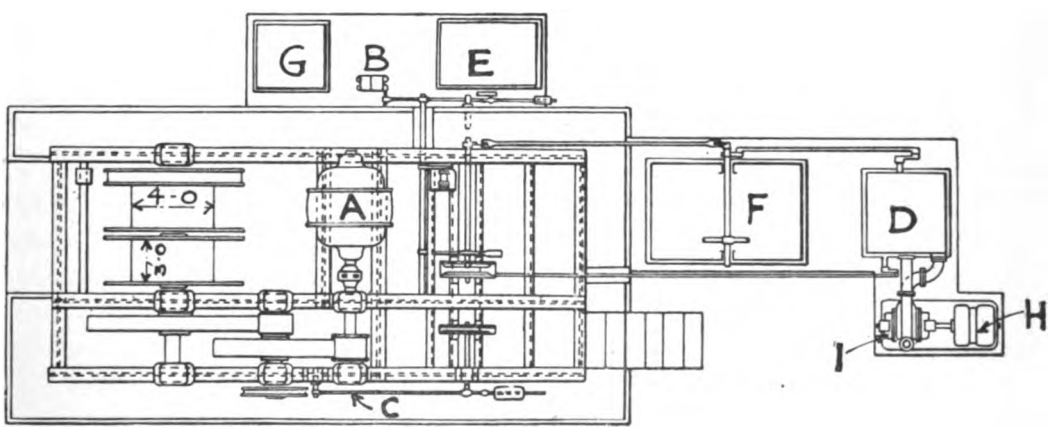

FIG. 468.

FIGS. 467 AND 468.—ELECTRIC WINDING MACHINE BY THE ELECTRICAL COMPANY LIMITED.

resistance may be introduced into the armature or "rotor" circuit—squirrel cage rotors, owing to the low starting torque and difficulty of speed regulation, being entirely out of the question. The rheostat may consist of coils of iron or other

metal wire, carefully insulated from each other and supported upon some non-combustible material, or may consist of a liquid in which a plate or electrode is immersed, the current flowing from the plate through the liquid to the case containing the liquid, or to suitable terminals arranged therein.

Figs. 467 and 468 show two views of an electrical winding or hauling machine

FIG. 469.

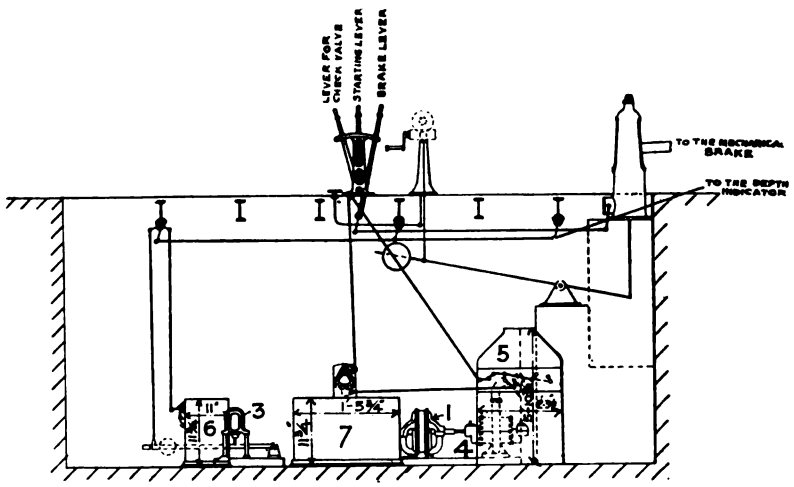

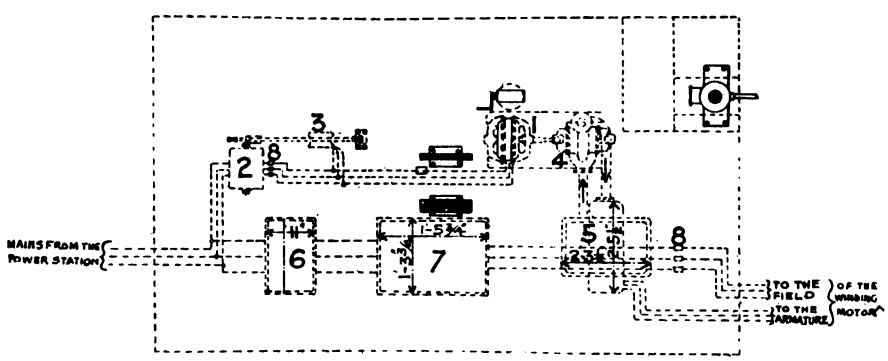

FIG. 470.

FIGS. 469 AND 470.—DIAGRAM OF ELECTRICAL CONNECTIONS FOR THREE-PHASE WINDING MACHINE.

by the Electrical Company Limited, in which three-phase currents are used. A is the three-phase motor driving the drums through a double reduction of gearing; B a magnetic brake acting through the weighbar and levers on the drum—this brake may also be worked by foot, a foot lever being provided for this purpose; C

is another brake fitted to the intermediate shaft, worked by a hand-lever; D is the liquid starting switch; E an emergency switch; F, stator reversing switch; G, transformer for the pump motor H; and I, the pump for circulating the water through the liquid starting switch. This circulation is regulated by means of a check valve controlled by the check valve lever. The electrical connections are shown in figs. 469 and 470 diagrammatically, in which 1 is the pump motor, 2 transformer for pump motor and coils of magnetic brake 3, 4 is the circulating pump, 5 liquid starting switch, 6 emergency switch, 7 reversing switch for stator, 8 fuses. Here the emergency brake consists of a suspended weight, and it will be noticed that this is controlled by levers coupled to the magnetic brake and to the depth indicator. A small winch is provided for raising this weight.

Probably the most important installation of electrical winding in which three-phase currents are used is that which the Harpener Mining Company, Dortmund, installed at their Preussen II. Pit, particulars of which have been supplied by the Electrical Company Limited. Practically, the electrical features are the same as those just described. The motor is a three-phase alternating machine, with the rotor keyed to the same shaft as the Koepe pulley, and the winding is on the Koepe system, with a single rope for the two cages. Figs. 471, 472, and 473 show the general arrangement of the winding machine, whilst fig. 474 is a diagram in perspective, which clearly shows the various mechanical and electrical connections. From the latter it will be seen that three-phase alternating currents are supplied at a pressure of 2,000 volts, and are first passed through a mechanical safety cut-out switch, and from thence to the stator reversing switch worked by the starting lever, as shown, and from this are conveyed direct to the stator of the motor. No current is supplied to the rotor, the currents necessary for its propulsion being induced in the windings through the influence of the currents traversing the windings of the stator. When at rest a very large current would be induced at starting, were it not for the added resistance of the liquid starting switch, which is connected to the windings of the rotor through the slip-rings, and which reduces the amount of current, and raises the induced pressure to 300 volts. The effect of introducing the resistance is to increase the starting torque, and thus enable the inertia of the masses to be set in motion, to be overcome; after which the resistance is gradually cut out during acceleration until the motor and pulley run up to full speed, which in this case is fifty-one revolutions per minute. By the insertion or cutting out of the resistance the speed can be regulated *within certain limits*, but nothing like the speed regulation that is possible with a steam engine, which may be from zero to a maximum.

From the three line wires a branch circuit is taken to a step-down static transformer, which reduces the pressure from 2,000 volts to 190 volts, and currents at

Fig. 471.

Fig. 473.

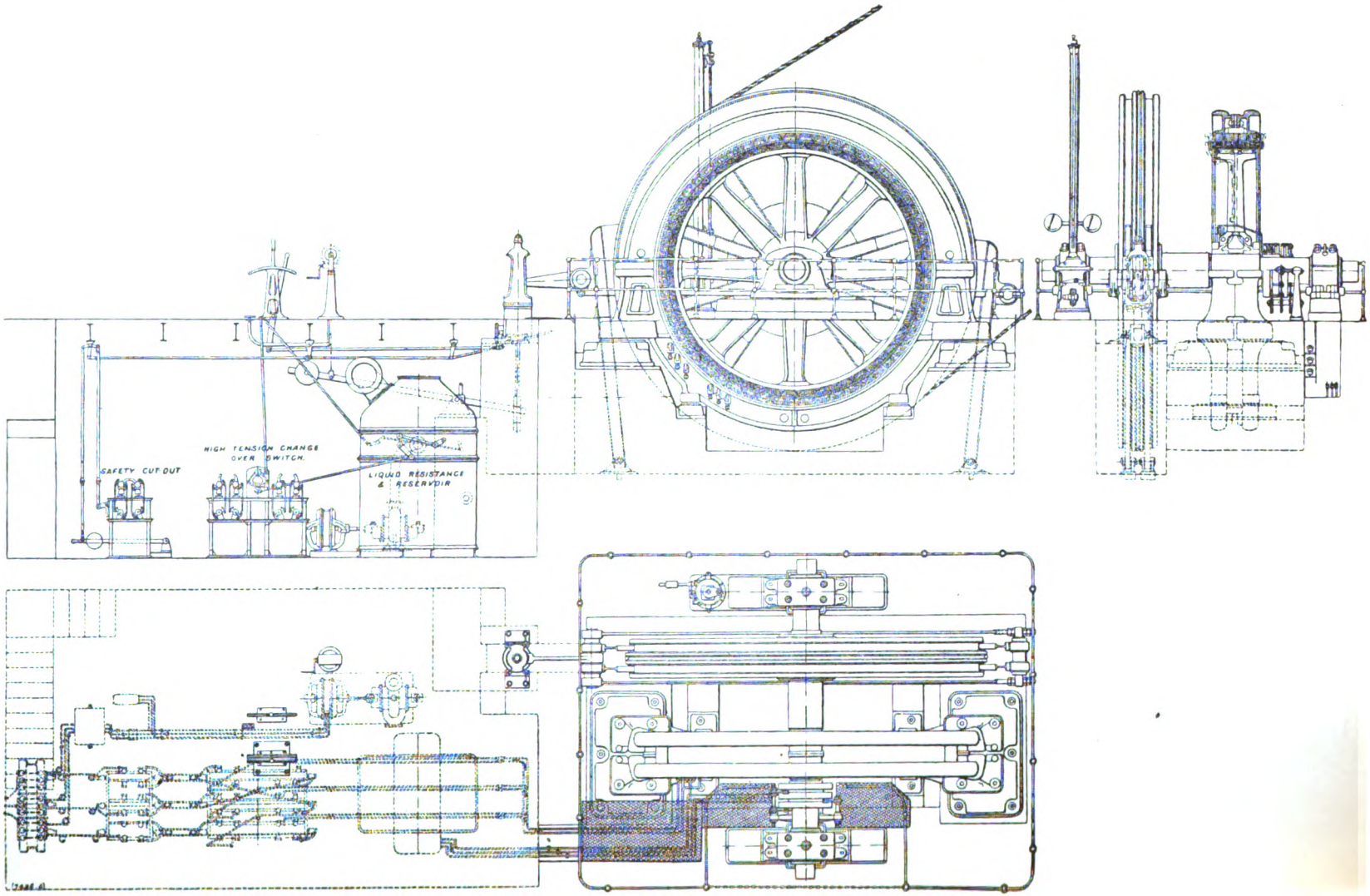

Fig. 472.

Figs. 471, 472 and 473.—Preussen II. Pit. Electric Winding Gear.

this pressure are used for the cut-off magnet and motor driving the circulating pump of the liquid starting switch. The cut-off magnet consists of a solenoid supporting a weight upon the end of a lever, which is connected to an arrangement of levers for tripping the weighted brake lever and breaking the electrical circuit at the mechanical safety cut-out. There are, in addition to this cut-out, high-tension fuse cut-outs, which would blow when for any reason an abnormal rush of current occurred.

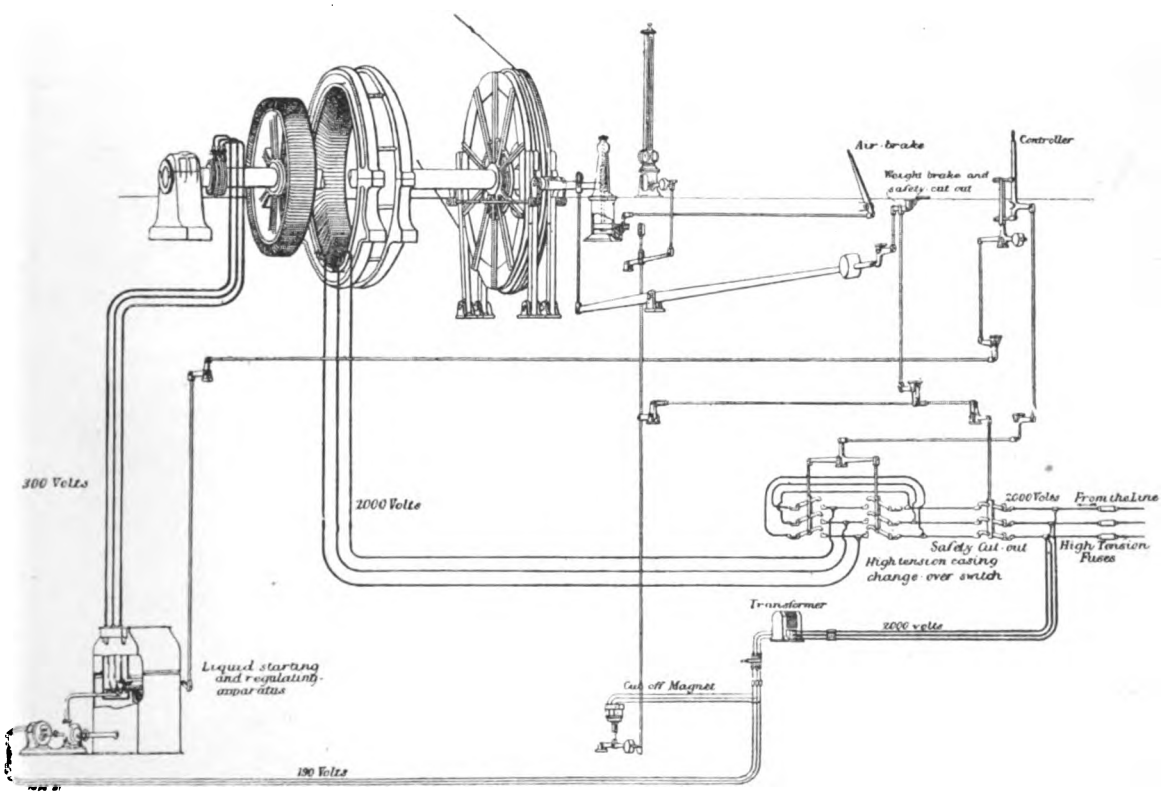

FIG. 474.—DIAGRAM OF CONNECTIONS.

The starting switch, shown in fig. 475, consists of three plates or electrodes, insulated from each other, and dipping into a solution of caustic soda. As will be seen, a centrifugal pump keeps this constantly in circulation, in order to dissipate the heat generated by the resistance to the current. So long as the check valve is in the position shown, none of the solution can reach the electrodes, but on closing this valve the liquid rises, until at length it covers the electrodes and overflows at the top. By regulating, then, this valve, the electrodes may be more or less

immersed in the liquid, corresponding with less or more resistance in circuit with the rotor, and quicker or slower speed.

Fig. 476 shows a general view of the winding gear at the Harpener Mining Company's Preussen II. Pit, whilst fig. 477 is a view of the controlling gear placed below the engine-house floor, from which the complicated nature of its construction, as compared to the starting gear of a steam engine, may be judged.

Figs. 478 and 479 show another arrangement of electrical winding gear by the Electrical Company Limited, in which ordinary drums are used.

Another winding gear, driven by two three-phase motors, is shown in

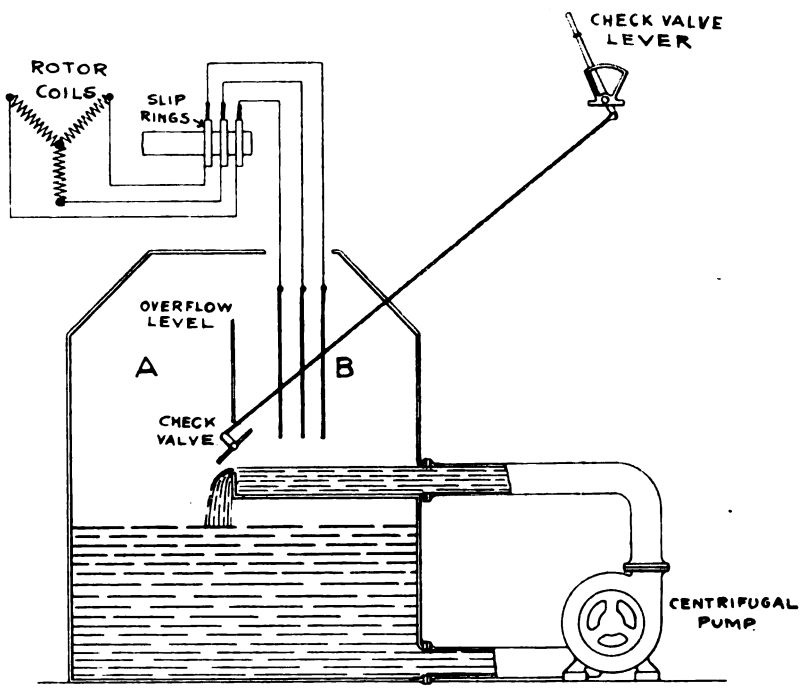

FIG. 475.—LIQUID STARTING SWITCH.

figs. 480 and 481. In this case the motors are in duplicate, in order to facilitate getting the machines underground, as well as convenience in working, either machine being arranged to work singly.

The drum is 4 ft. in diameter by 3 ft. wide, and runs loose on the shaft, the two cheeks being bushed with gunmetal. It is driven by means of a friction clutch of the Hall type, consisting of a steel band lined with renewable wood blocks, actuated by means of a screw and handwheel, which grip a friction disc bolted to the large spur wheel. A band brake is provided, operated by a foot lever, which is

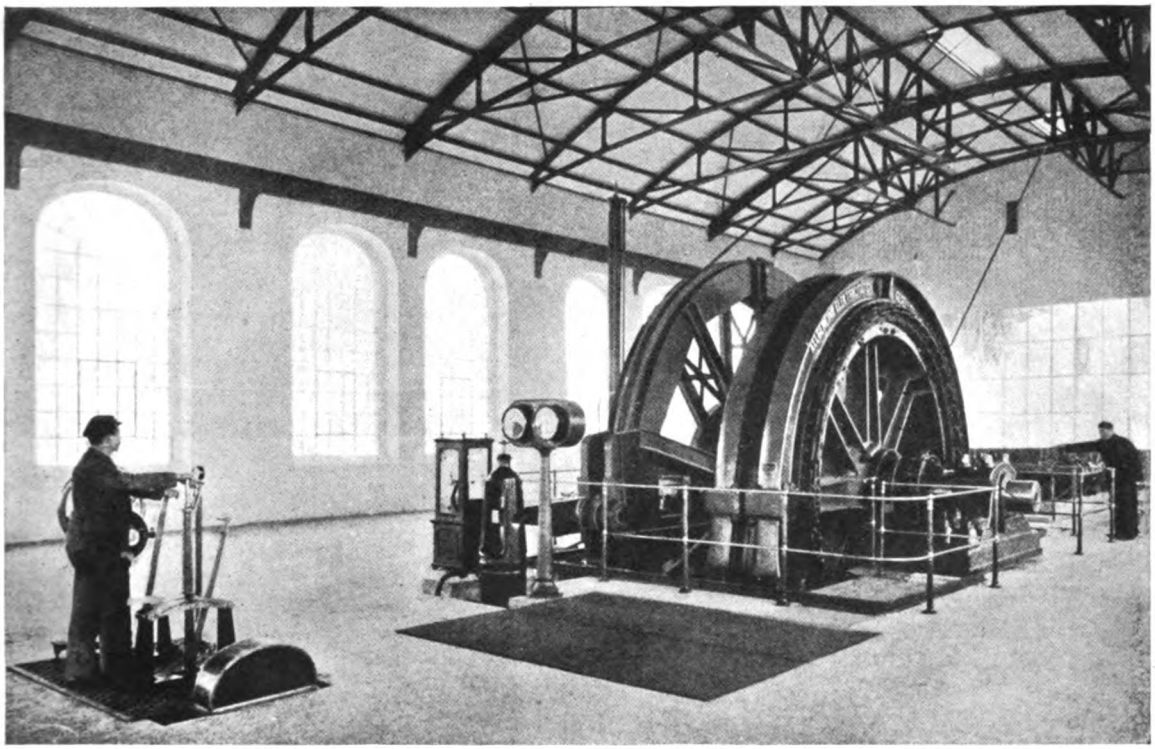

FIG. 476.—PREUSSEN II. COLLIERY. ELECTRIC WINDING GEAR.

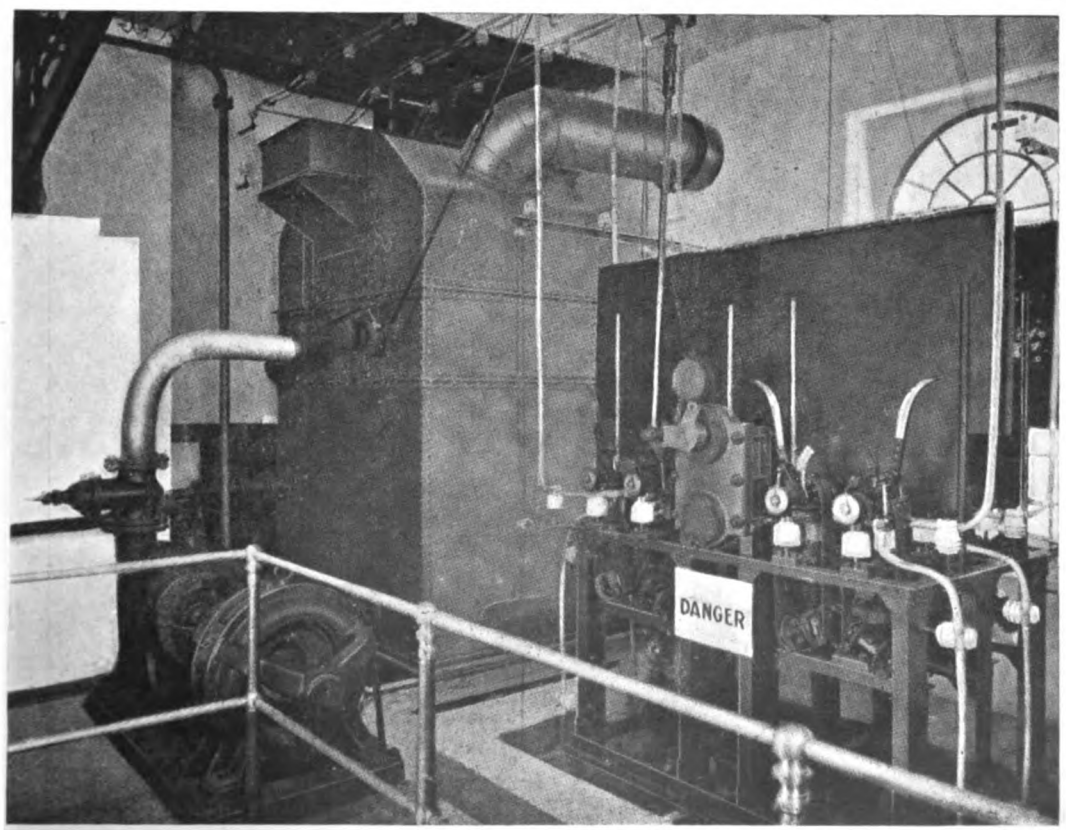

FIG. 477.—PREUSSEN II. PIT. GENERAL VIEW OF CONTROLLING GEAR FOR ELECTRIC WINDING GEAR.

FIG. 478.

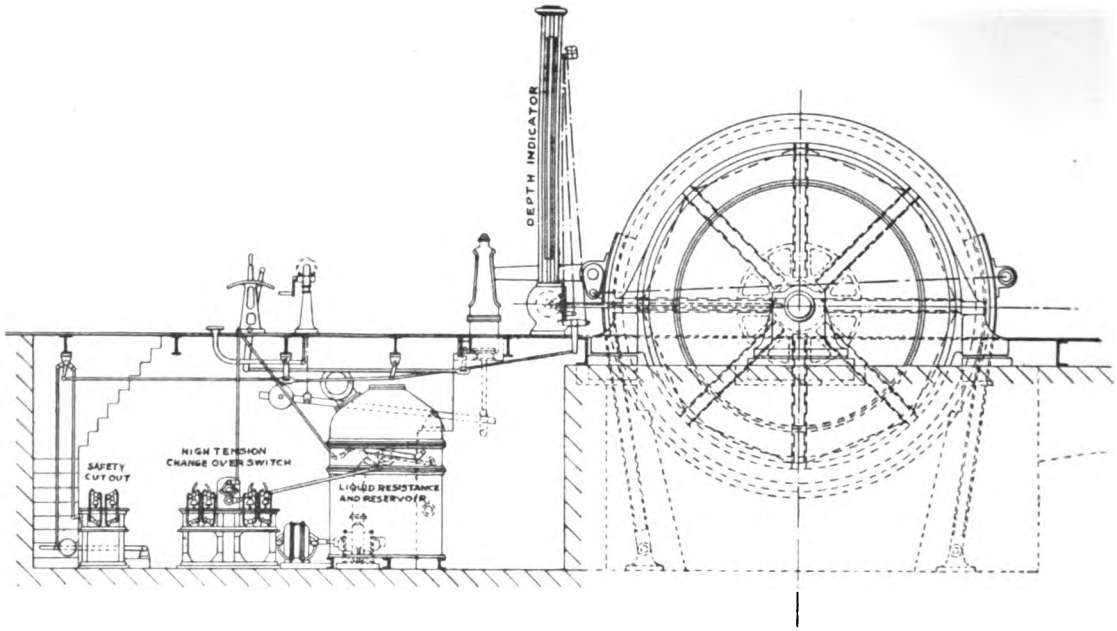

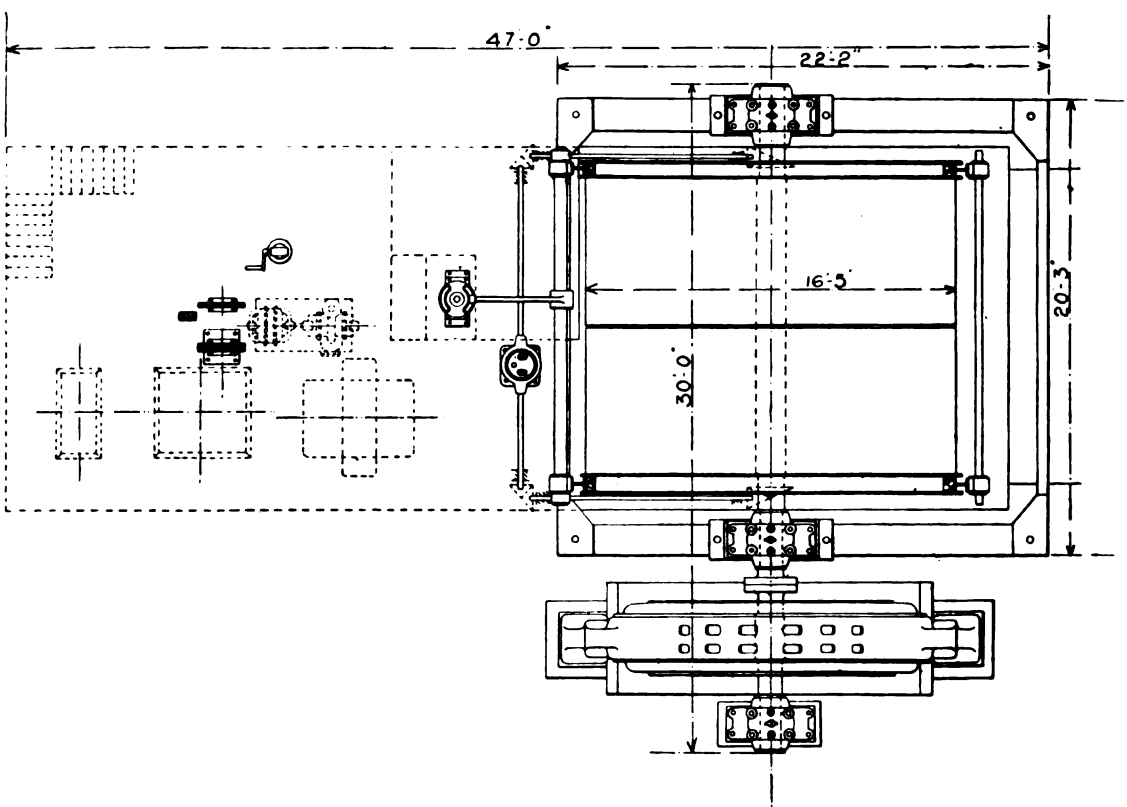

FIG. 479.

FIGS. 478 AND 479.—ELECTRICAL WINDING GEAR BY THE ELECTRICAL COMPANY LIMITED.

capable of holding the fullest load the gear can wind. The mechanical portion of the gear is by Messrs. Markham and Co., the electrical portion being supplied by Messrs. the British Westinghouse Electrical and Manufacturing Company Limited.

The control of these machines is effected by inserting a resistance into the rotor circuit, and the motor is therefore provided with slip rings. Fig. 482 shows the diagram of connections, the three resistances R being "inserted" or "cut out" in the rotor circuit as required. The resistances consist of cast iron grids mounted in a frame as shown in figs. 483 and 484. The controller is of the barrel type and shown in figs. 485, 486, and 487, fig. 482 being really a development showing the contacts as arranged on the barrel of the controller. The body of the controller is filled with oil.

In the series and three-phase machines regulation can only be obtained by introducing resistance into the armature circuit, which has the same effect as throttling the steam at the regulating valve of a steam engine, with this difference, that whereas in the steam engine steam is used in the engine at a reduced pressure, though with more condensation losses, in the electrical rheostat the amount of current used practically remains the same, and what is not converted into useful work is wasted in heating the resistance. For this reason they are most unsuitable for main winding. Three-phase motors have the further disadvantage of causing a heavy voltage drop in the line when starting, which more or less affects the remainder of the installation, as the winding motor is a large or small unit of the whole.

The most satisfactory arrangement for winding is by means of "shunt" control, of which there are several methods, but all require more or less special plant. The simplest of these is probably the series-parallel method of control, in which the winding drum is driven by two motors, or one motor with two commutators (which is practically two motors in one). For starting and slow speeds, the machines are coupled in series, and when run up to full speed are coupled in parallel. The selection of any particular system, however, depends upon the facilities afforded in the shape of first cost, reliability and simplicity.

In order to better understand what follows, it may be well to briefly consider the principle of "shunt" regulation. In any continuous-current motor the speed and torque depend upon the current flowing through the armature and the strength of the field magnets. Before an armature can exert any torque it must revolve in a magnetic field. For instance, suppose the current is switched on to a motor, in which the field coil circuit is broken, and as a consequence there is no magnetic field, the result will be that the armature practically short-circuits the mains, and such a large current will flow as (if unprotected with some suitable means as, say, fuses) would eventually burn up the armature windings. If, however, there is a

FIG. 480.

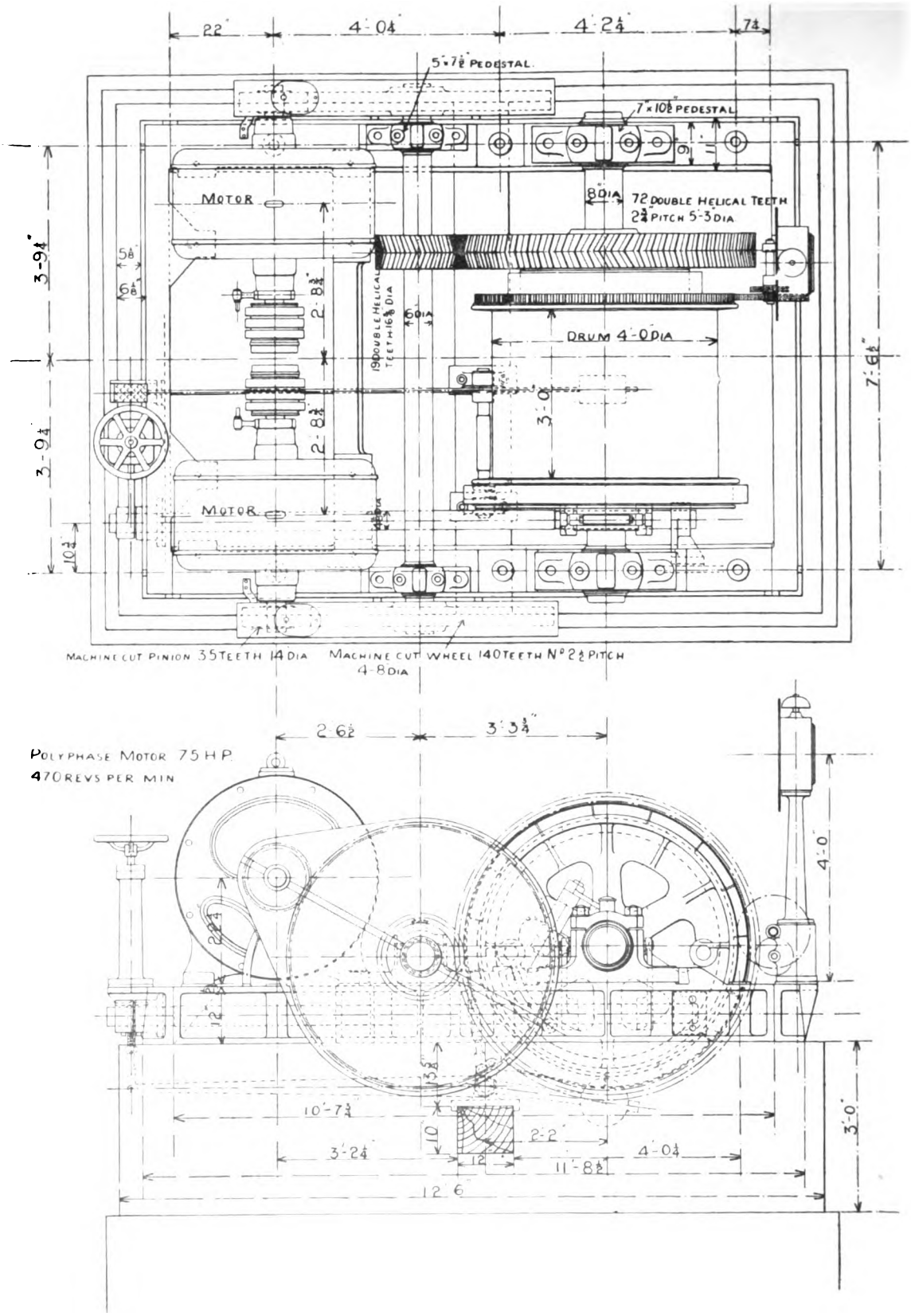

FIG. 481.

FIGS. 480 AND 481.—SMALL ELECTRICAL WINDING GEAR DRIVEN BY TWO THREE-PHASE MOTORS (see page 234)

strong field, the armature will at once commence to turn and exert a torque proportionate to the amount of current flowing through its windings. In starting a series motor when the armature is at rest a large current at once rushes through it, but the same current also goes round the field winding, and excites a strong magnetic flux, hence a powerful starting torque is the result. In a simple shunt-wound motor the field excitation current is limited, and though at starting a very large current may—and usually does—flow through the armature, the starting torque is lower than in the case of the series machine. At starting, then, very large currents flow through the machines, because they are at rest, and no counter-electromotive force

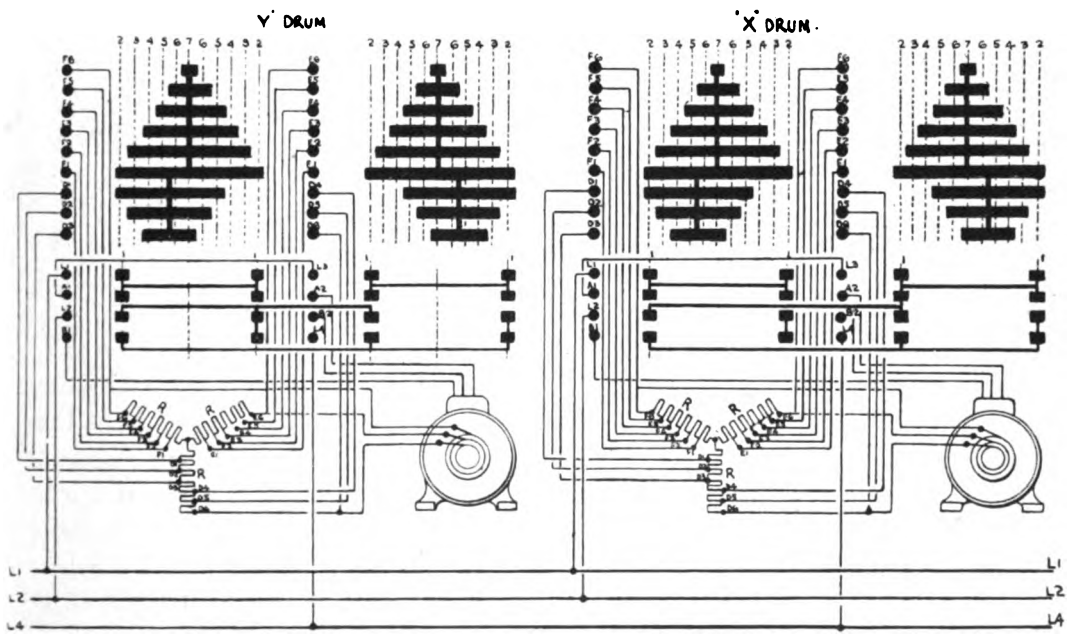

FIG. 482.—DIAGRAM OF CONNECTIONS FOR TWO THREE-PHASE MOTORS.

is being developed, but immediately the armature begins to revolve in a magnetic field it develops a counter-electromotive force, and lessens the flow of current until, when the armature is running at a certain speed—depending upon the strength of the magnetic field—it generates a counter-electromotive force nearly equal to that supplied by the generator, and a very small current is then flowing through the armature. Consequently, then, in ordinary rheostatic control, the whole of the current flowing through the armature has to be dealt with, entailing in large machines such heavy switching apparatus that special means have to be provided to work them.

By introducing resistance into the field winding, however, only the small

exciting current has to be dealt with, and by inserting or cutting out resistance in the field magnet winding, so that the strength of the magnetic field is weakened or intensified, a quicker or slower speed of the armature will be necessary to develop the same counter-electromotive force, and further by varying the strength of the field, for the same current strength, the torque may be varied. This method may be said to be analogous to varying the steam *pressure* instead of the *quantity* of steam in a steam winding engine.

In a main winding plant the motor attached to the drum is supplied with a constant field, and its armature is supplied with a current of varying pressure generated in a special dynamo whose field is capable of being varied by means of a shunt resistance as shown in the diagram of connections in fig. 488. Here it will be seen the field coil of the winding motor is excited from the mains of the main generator, which of course may be in some large power supply station. The field coil of the variable voltage dynamo is also excited from the mains, but with the introduction of a variable resistance as shown. This latter machine is the dynamo supplying current to the winding motor, as shown by the thick lines, and is driven by the motor on the right of the flywheel, which is driven from the mains of the main generator; the two armatures with the flywheel between them are coupled to the same shaft, and together are termed the starting machine or motor-generator. The motor on the left of the starting machine then is driven by the main generator, and it in turn drives the variable voltage dynamo, and supposing all the resistance is in circuit with the field coils, no current will be generated to supply to the winding motor. As the resistance is cut out, a current of varying strength depending upon the required load will be supplied to the winding motor, which will revolve at such a speed as to generate a voltage nearly equal to the variable-voltage dynamo. Thus the speed may be regulated, easily and efficiently, and high-class continuous motors can now be built to run sparklessly, with a fixed position of brush at any load or speed.

In discussing the steam winding engine, it was shown that an enormous amount of power is required to start and accelerate the load and moving masses, and in all steam engines it is usual to allow full steam to be admitted to the cylinder for the whole stroke for at least one revolution of the drum (unless the engine is working with a permanent late cut-off) and the steam is cut off and expansion begins as the speed increases. So with the electrical plant; at the moment of starting, a large current is drawn from the generator which would drop in speed and voltage, and the amount of the drop and its effect upon the remainder of the installation depends upon the size of the generating plant supplying the current. To obviate this drop in installations where the winding plant was a large factor, storage batteries were introduced which supplied the extra current during

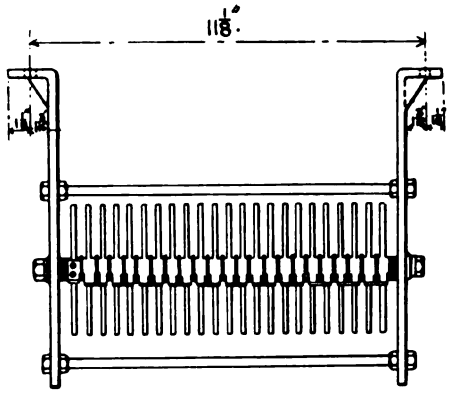

FIG. 483.

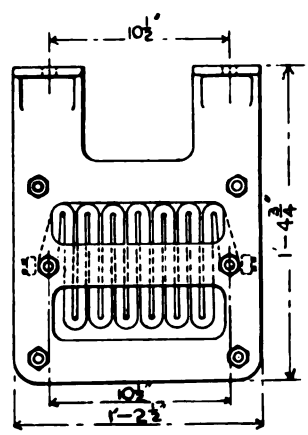

FIG. 484.

FIGS. 483 AND 484.—RESISTANCE FRAME.—BRITISH WESTINGHOUSE CO. (*see* page 237).

FIG. 486.

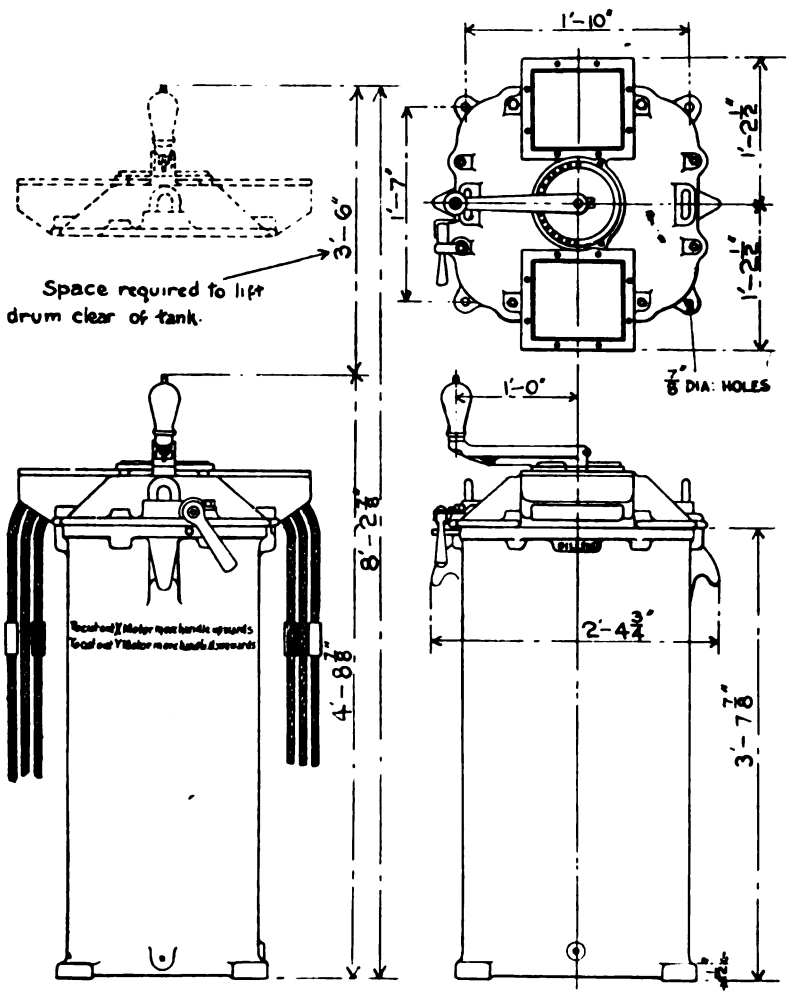

FIG. 485.

FIG. 487.

FIGS. 485, 486, AND 487.—BRITISH WESTINGHOUSE CONTROLLER FOR THREE-PHASE MOTORS DRIVING WINDING DRUMS (*see* page 237).

the starting period, and which were charged by the generator during the standing period. Storage batteries, however, are expensive in first cost and maintenance, and moreover nasty, especially at a colliery, and as other means are available they need not be alluded to further, though in the first installation they were largely used, until Mr. Carl Ilgner suggested the use of a flywheel, and such a flywheel is shown in the figure. The function of the flywheel is to absorb energy during the period the winding motor is at rest, and give it out again, with a corresponding drop in speed, during the starting period, and it is easily seen that provided sufficient energy can be stored in the flywheel—which is simply a question of weight and speed—the power required from the main generator may be constant and equal to the average horse-power required for the wind, so that the engine driving the

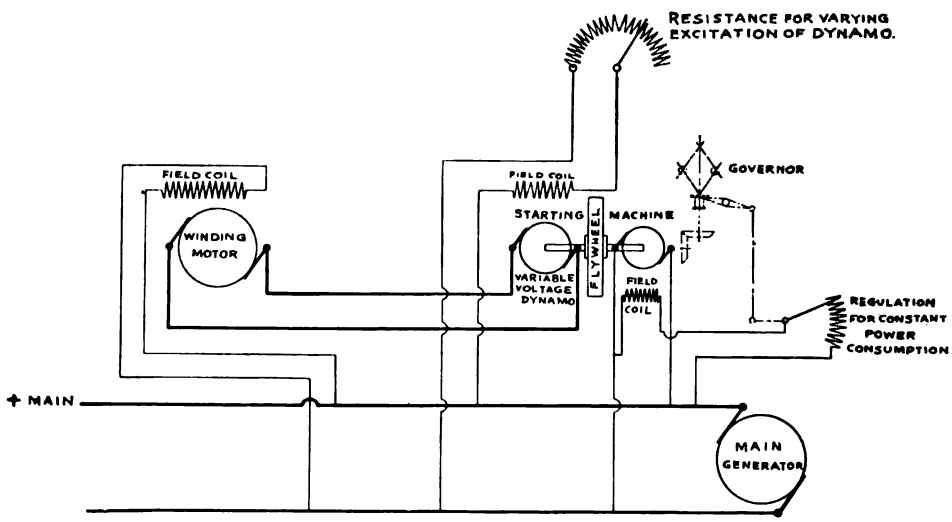

FIG. 488.—DIAGRAM OF CONNECTIONS FOR ELECTRICAL WINDING PLANT, ILGNER SYSTEM (*see* page 240).

generator may work with fixed cut-off, high expansion, and a maximum economy in the consumption of steam. Hence the saving in fuel consumption and the degree of economy in working cost depend upon the first cost and excellence of the plant installed, in comparison with the first cost and more or less greater consumption of steam by the steam winding engine.

Another important feature of the electric motor is that it will work as a dynamo and generate current; this is taken advantage of in the winding motor during the period of retardation, when the machine is made to act as a generator sending back current into the variable voltage dynamo, which now becomes a motor and accelerates the speed of the flywheel, thus storing up the energy which would

otherwise be lost in the brakes, and which is used during the next starting period of the wind.

It will be understood, of course, that the starting machine is constantly running, even though the winding motor may be standing for fairly long periods, but very little power is required for this, being merely that necessary to overcome the frictional resistances of the bearings, &c., and it is probable that the consumption of steam for this purpose would amount to less than what would be consumed in condensation losses during the period a steam engine would be standing. Further, as the motor of the starting machine is shunt-wound, the speed cannot exceed a certain limit depending upon the excitation of the field magnets, so there can be no danger of the flywheel accelerating to a speed that would become dangerous.

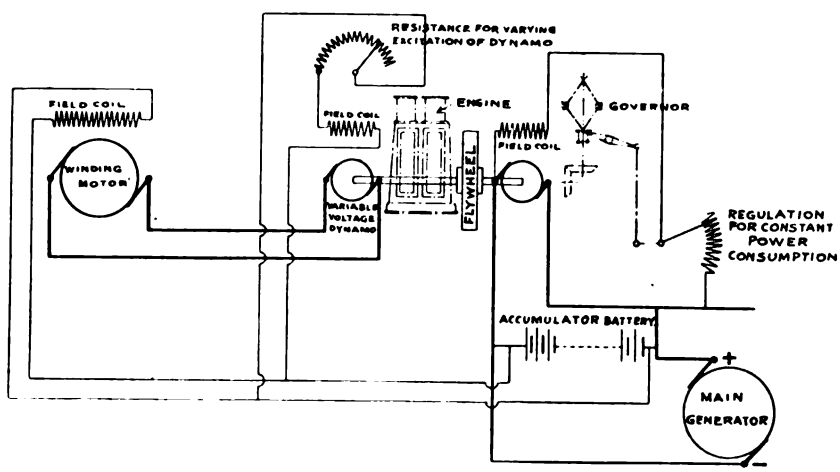

FIG. 489.—DIAGRAM OF ELECTRICAL CONNECTIONS FOR WINDING MOTOR.

In connection with the shunt winding of this motor is a rheostat controlled by a governor, which by its action inserts or cuts out resistance, and upon this governor depends the efficient working of the plant, so far as economy in power consumption is concerned; but the Electrical Company Limited, who kindly supplied the two diagrams, figs. 488 and 489, state that in practice it has not been found to work well, and is now usually replaced by an electrical arrangement depending upon the strength of the current taken by the motor, which may be termed an electrical governor, whereas the one shown in the diagram is a mechanical one. When the winding motor is standing, then, all the resistance is in, which weakens the strength of the field magnets, and consequently the armature revolves at its highest speed in order to generate a counter electromotive force nearly equal to the supply. So soon as the winding motor starts, however, the demand for current from the

variable voltage dynamo reduces the speed, and the flywheel at once begins to give up its energy, but at the same time, owing to the reduced speed, a larger flow of current would rush to the motor of the starting machine, were it not for the governor, which now "cuts out" the resistance, and by strengthening the field magnets, reduces the flow of current from the main generator, which would otherwise take place. On the completion of the wind, the starting machine speeds up again, the governor "inserts" resistance, and the flywheel absorbs energy ready to be given out during the next wind, when the cycle of operations is repeated.

The actual arrangement of the plant may be varied in many ways to suit the conditions of the service. Fig. 489 shows two such variations. The starting machine may be separately driven by a steam engine, which is shown dotted, in which case the machine on the right would be a separate small dynamo for

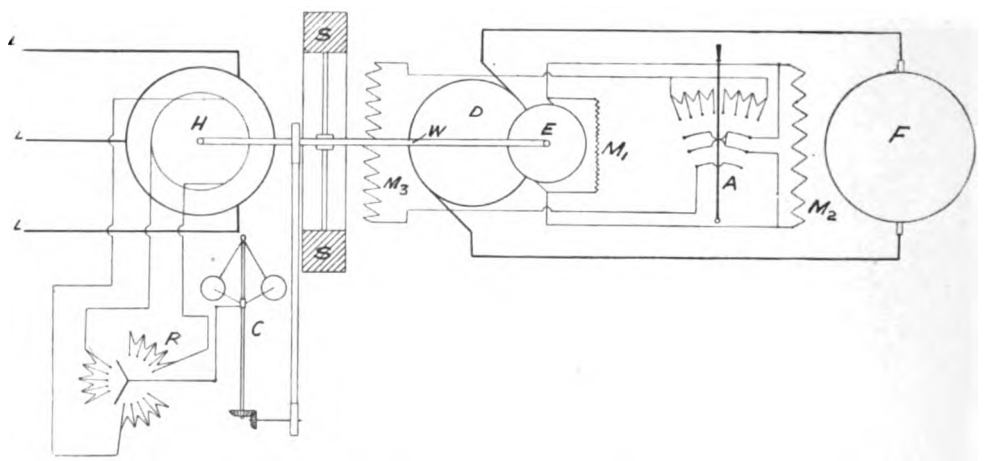

FIG. 490.—DIAGRAM OF ELECTRICAL CONNECTION FOR THREE-PHASE SUPPLY.

generating the exciting current for the two large machines, and an accumulator battery may be provided to prevent any drop of voltage on the shunt leads, owing to fluctuation in speed. Or on the other hand, the plant may be arranged as in the diagram, which shows the motor of the starting machine driven by current from a main generator, but the exciting current for the other two machines is maintained at its proper voltage by a battery of accumulators, which is, of course, kept charged by the main generator.

In both the cases last mentioned direct current is used throughout, but three-phase currents may be equally well used as the primary source of supply, in which case the motor driven from the supply must be of the three-phase type. Fig. 490 is a diagram supplied by Messrs. Bruce Peebles and Co., in which H is the rotor of three-phase motor; the stator is represented by the dark line circle, and is supplied

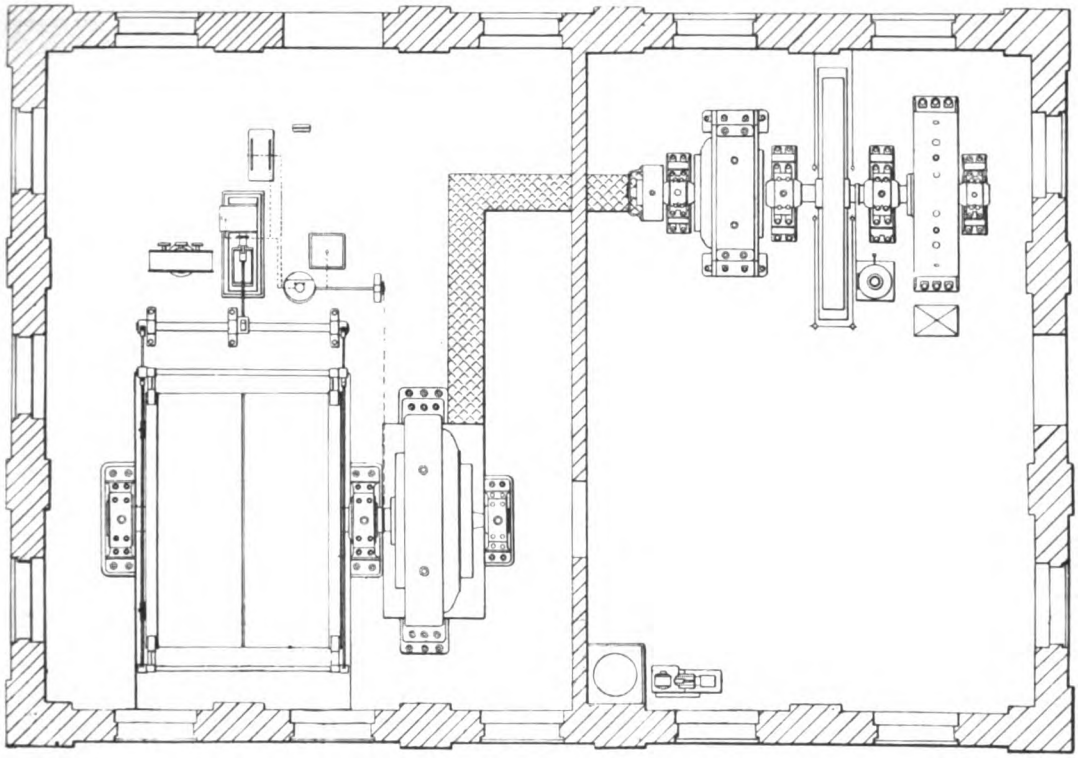

FIG. 491.—ELECTRICAL WINDING PLANT.—Plan.

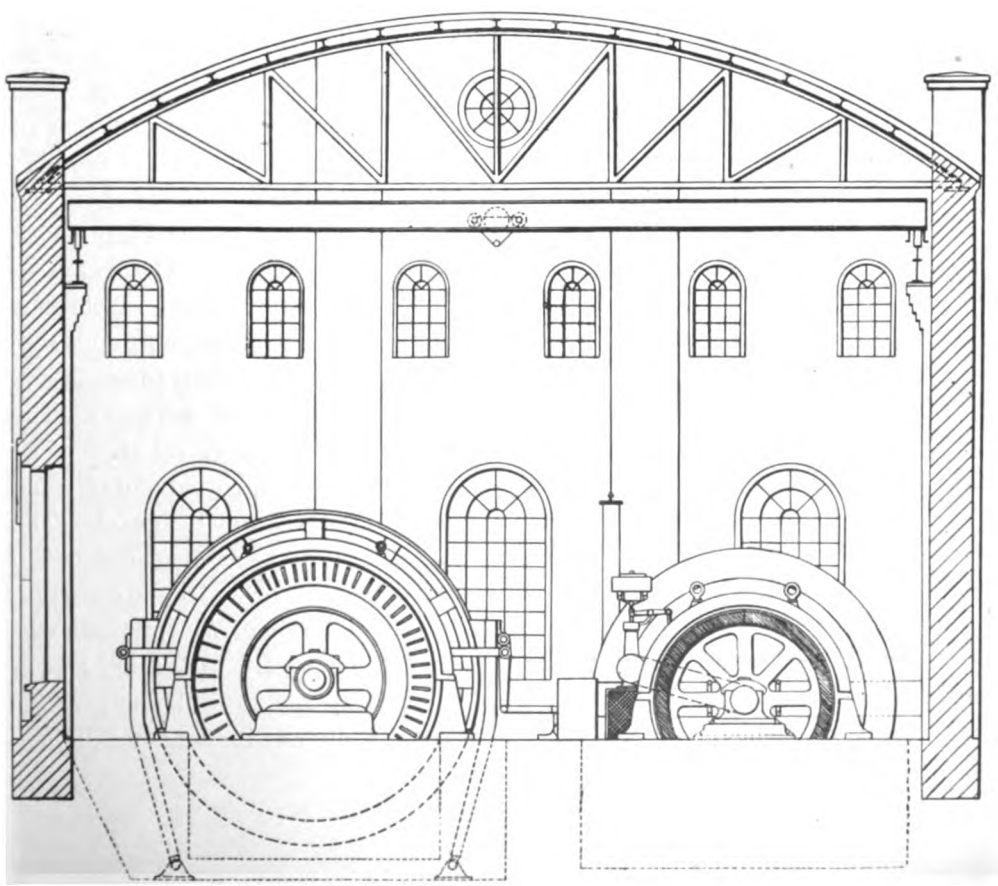

FIG. 492.—ELECTRICAL WINDING PLANT.—Cross Sectional Elevation.

with currents from the lines L L L. The rotor is provided with slip rings, for introducing a resistance R controlled by the governor C for regulating the power consumption from the mains, in a similar manner to the resistance provided in the shunt winding of the continuous-current motor. S is the flywheel, W the common shaft, on which are mounted the rotor H, flywheel, armature of the variable voltage direct-current dynamo D, and the armature of the direct-current dynamo E generating the shunt exciting current. F is the winding motor with its field coil M_2; M_1 and M_3 are the field coils of the exciting and driving dynamos respectively. A is the starting, reversing and controlling handle, which introduces or cuts out resistance in the field coil of the dynamo D. With the exception of the three-phase motor and the small dynamos for excitation of the field coils, the diagram of connections is similar to fig. 488, and the working is the same. It may be mentioned that the resistance shown in the latter figure for varying the excitation of the dynamo, would, of course, be arranged for reversing and controlling, and would not be a simple resistance as shown. Some idea of the general arrangement of an electrical winding plant will be obtained from the two views shown in figs. 491 and 492.

In order to avoid the expense of massive foundations and engine-rooms, electrical winding plants with Koepe pulleys are now being fitted on top of the headgear directly over the shaft. Such an arrangement, however, is more applicable to the Koepe pulley than to a single drum with separate ropes, owing to the traverse of the rope on the drum. In any case, there is a little difficulty in getting a good lead for the rope, and a guide pulley is usually provided to guide the rope into the centre line of one of the cages. Figs. 493 and 494 show two views of an arrangement supplied by Messrs. Siemens and Halske for dealing with an output of 1,000 tons in nine hours from a depth of 275 fathoms. There are two driving pulleys *a*, *a*, each driven by a motor of 240-horse power, at 46 revolutions per minute. The rope is flat, about $3\frac{5}{8}$ in. in width by $\frac{3}{4}$ in. thick, and embraces nearly three-quarters of the circumference of each pulley, and then passes over a larger guide pulley *b*, by which it is led to suit the centres of the cages. The bending strains appear to be severe, but there will be little or no slip. The machinery is mounted upon the large centre frame or leg, supported and steadied by two smaller ones, so that the three legs together form a hugh tripod. (The dimensions are in millimetres). Figs. 495 and 496 show the arrangement of the controlling apparatus, *c* being the switchboard, *d* starting lever frame, *e* starting and regulating gear, *f* commutator for reversing, *g* oil dashpot, *h* depth indicator with safety apparatus, *i* ammeter and volt-meter, *k* compressed air brake, *l* compressed air receiver, *m* safety brake worked by a heavy weight, *n* lifting gear for safety brake with emergency switch. The gear is shown in more detail in figs.

Fig. 493.

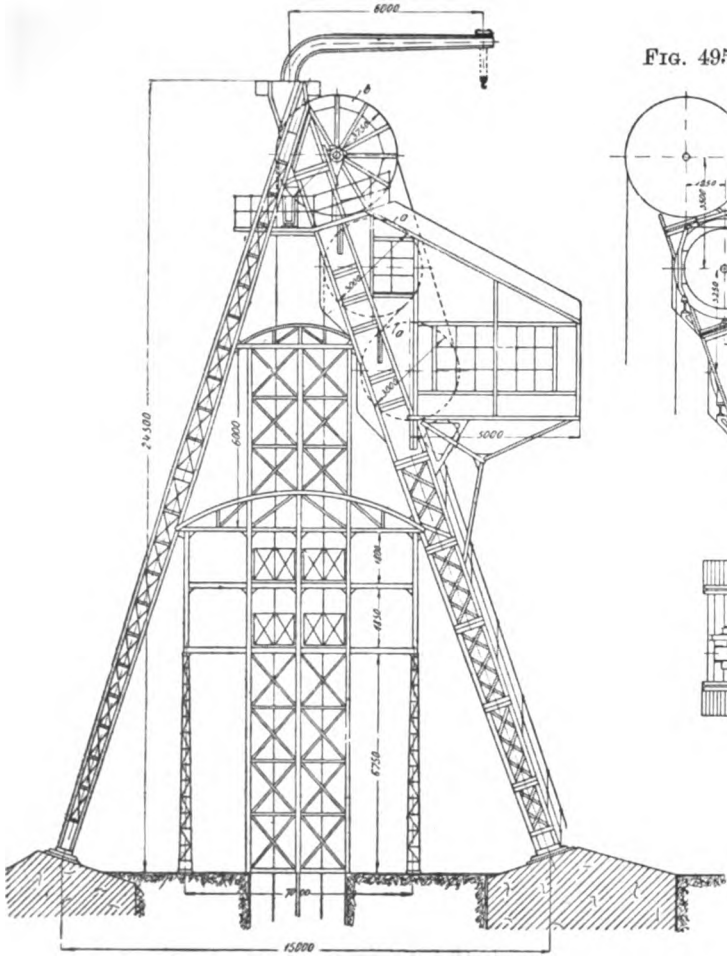

Fig. 495.

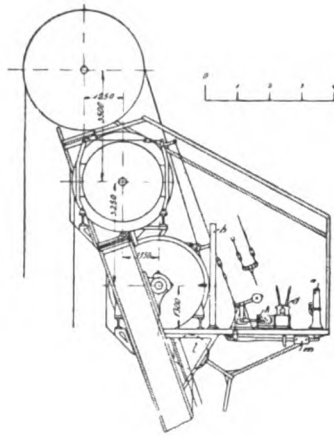

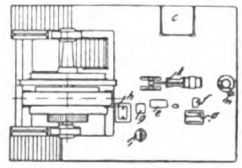

Fig. 496.

Fig. 494.

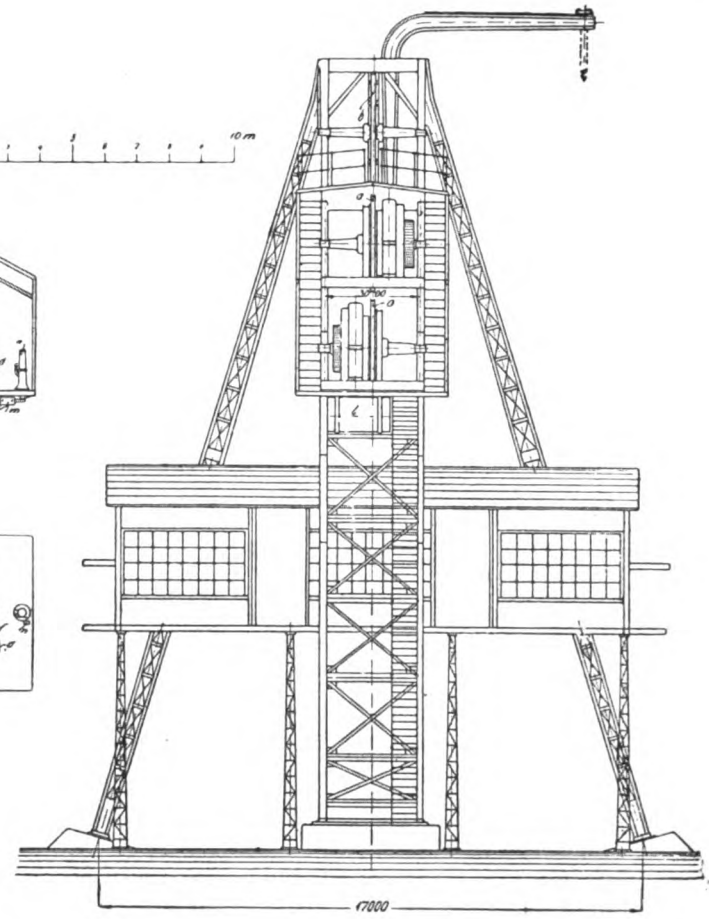

Figs. 493 and 494.—Electric Winding Gear on Top of Headgear, by Messrs. Siemens and Halske.

FIG. 497.

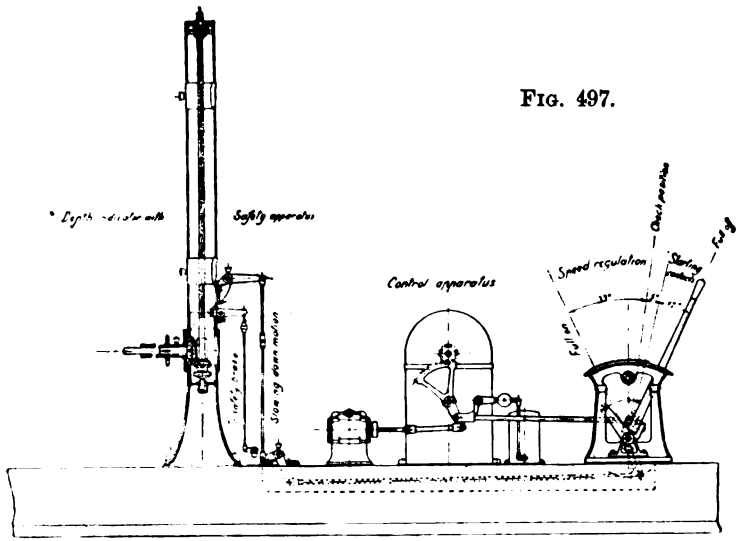

FIG. 498.

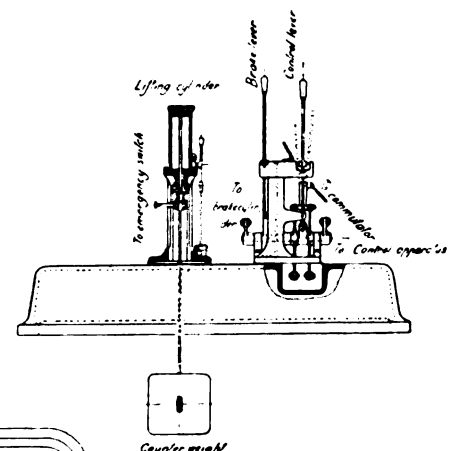

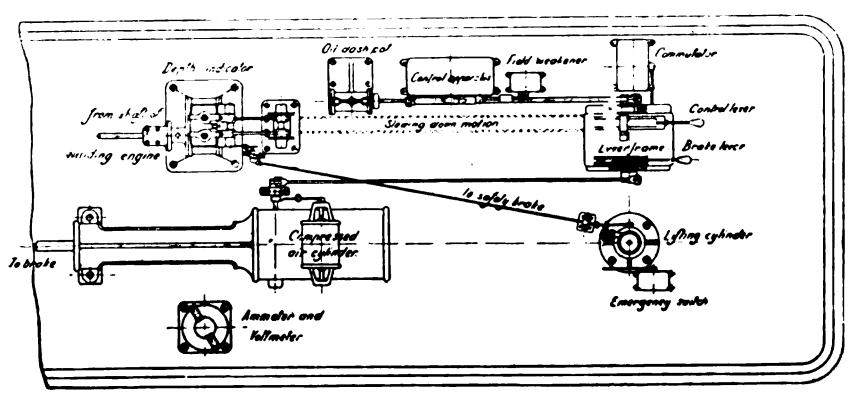

FIG. 499.

MESSRS. SIEMENS AND HALSKE'S CONTROLLING GEAR.

497, 498 and 499. The machines are controlled by a single lever—the control lever—which moves in two parallel slots in the lever frame, so that moving the lever forward in one slot lowers one cage, and moving the lever forward in the other slot reverses the motors, or what is the same thing, lowers the other cage. The reversal is thus effected by moving the lever sideways, which movement reverses the commutator or change-over switch. The speed is regulated by varying the exciting current of the converter-generator by means of a small controller with resistances of fine adjustment. To start, the handle is moved into the proper slot, and put forward, the first 12 degs. occupying the starting contacts, when the machine runs at a moderate speed, which is unaltered by moving the handle for other 5 degs., after which the speed begins to increase, until it reaches a maximum when the handle is full over. To prevent the handle being moved too quickly or the full current being suddenly thrown on, an oil dashpot is provided. To stop, the handle must be drawn back and moved over between the slots, and when in this position a small resistance is introduced in the field circuit for reducing the exciting current—it is said in the interest of economy—but there must be a certain loss in the resistance itself.

It is in connection with the pulling of the lever backwards that the safety apparatus comes into action. As will be seen, the depth indicator is provided with two fixed screws, on each of which moves a nut, one up and the other down, to represent the cages. Should the lever not be pulled back by the attendant, it will be moved back by the descending movement of the nut acting upon the levers and connecting rods of the slowing-down motion, and should the machine not come to a stop at the proper point, the nut will still further continue to descend until it strikes a small lever or tappet below, which releases the safety brake. This latter consists of a suspended weight, either by means of a small winch or an air-cylinder piston, on the end of a long lever, and it is also arranged that when it comes into action it entirely cuts off the current by means of an emergency switch. For ordinary braking during winding, a separate compressed-air brake is provided, and is worked by a separate lever, as shown.

Another interesting electrical winding gear which is placed directly over the shaft is that of the Tiremande Mine, particulars of which have been kindly supplied by the Lahmeyer Electrical Company Limited. The plant is installed to deal with 105 tons of coal per hour from a depth of 400 m. (about 73 fathoms) at a speed of 8 m. (about 26 ft.) per second ; this entails forty-eight winds per hour, with an effective load of 2,200 kilogs. (2·16 tons), 60 seconds being allowed for winding and 15 seconds for changing.

The general arrangement is shown in fig. 500. As will be seen, the motor and main Koepe winding pulley, and housing for same, are placed directly on the

top of a steel lattice type headgear, with a guide pulley platform immediately below, and a spiral staircase gives access to the different landings. The height of the headgear is 21 m. (about 70 ft.) above the ground, and weighs 120 tons. The extensive—and often costly—foundations and engine-house, and space occupied by them, is thus saved, while the weight of the headgear is probably very little, if at all, increased.

The driving and guide pulleys are about 13 ft. in diameter and fitted with two grooves, one of which is used when changing the rope. The driving pulley is mounted on a shaft with two bearings, and is directly coupled to two direct-current motors giving an aggregate maximum output of 500-horse power, one on each side of the pulley. The cage indicating gear is driven from the guide pulley to avoid any error due to slipping of the rope—which, owing to the angle embraced by the rope, is, however, unlikely to occur. This is shown in fig. 501, which also shows in more detail the controlling apparatus. One of the levers on the left is for starting and regulating the speed of the motors, whilst the other is the brake lever. The brakes are applied through a counterweight, which is lifted by an electromagnet (shown in section) which is more or less strongly excited by means of a regulator inserted in the circuit and controlled by the lever before mentioned. A hand winch, shown to the right of the two levers, is provided to lift and support the counterweight in the event of the electromagnet being out of order. The brake is also arranged to be automatically applied by the cage indicator, which also throws back automatically the controlling lever in the case of an overwind. A balance rope is applied, as is usual in Koepe winding, under the cages.

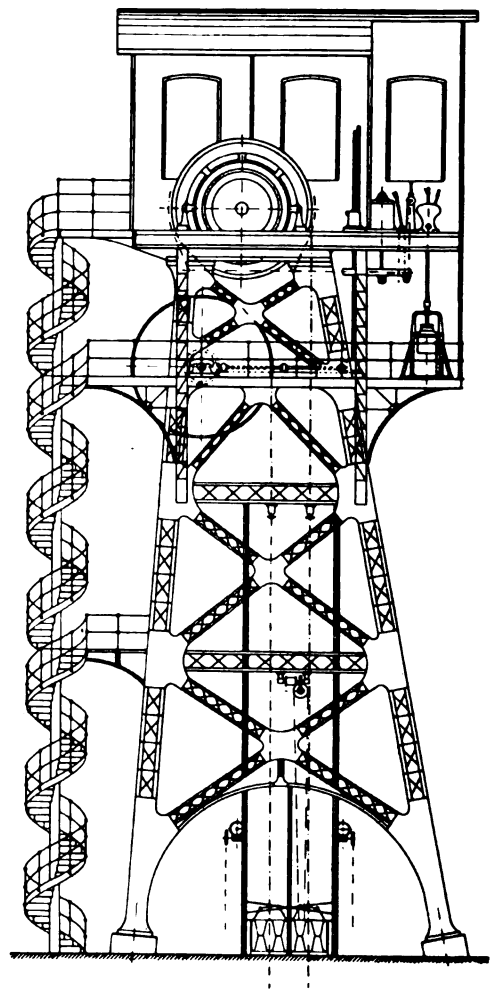

FIG. 500.—GENERAL ARRANGEMENT OF WINDING TOWER.

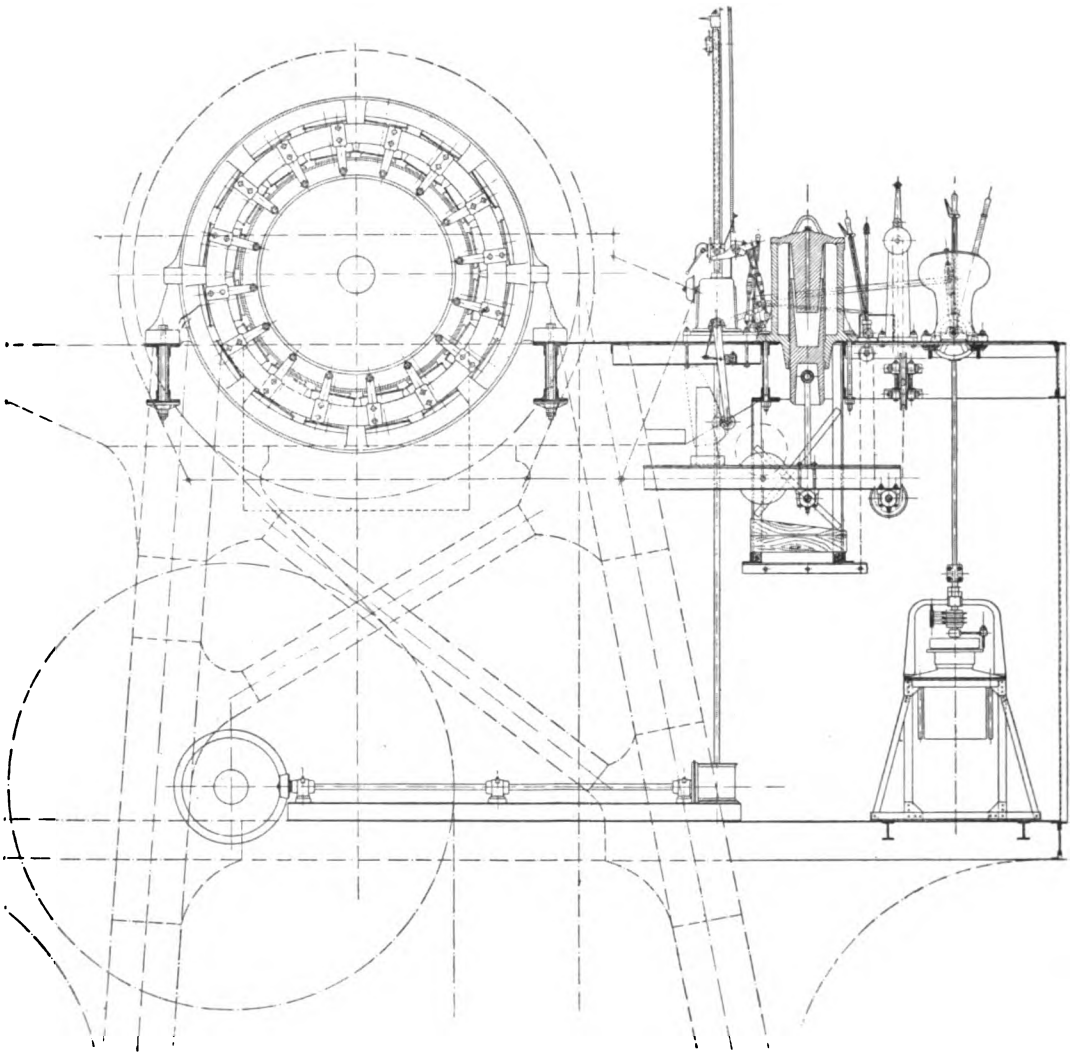

FIG. 501.—VERTICAL SECTION OF WINDING GEAR.

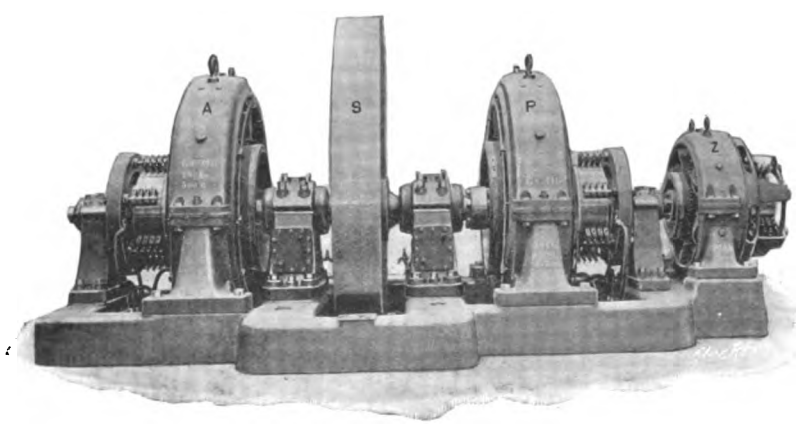

FIG. 502.—BUFFER SET.

The electrical equipment is somewhat novel, inasmuch as the current supplied from the generating current is continuous current, and is, so to speak, applied to the driving motors direct, but through what is termed a " buffer " set shown in fig. 502; A being the starting dynamo, P the buffer motor, S a heavy flywheel, and Z a small " boosting " dynamo for regulating the total voltage applied to the terminals of the buffer motor. The diagram of connections for these machines is shown in fig. 503, FM being the winding motors, from which it will be seen the starting dynamo AM and the winding motors FM are in series with the line, the excitation current of the field coils of the dynamo AM being controlled by the regulator R_2; R_1 being an automatic regulator controlling the excitation of the booster Z.

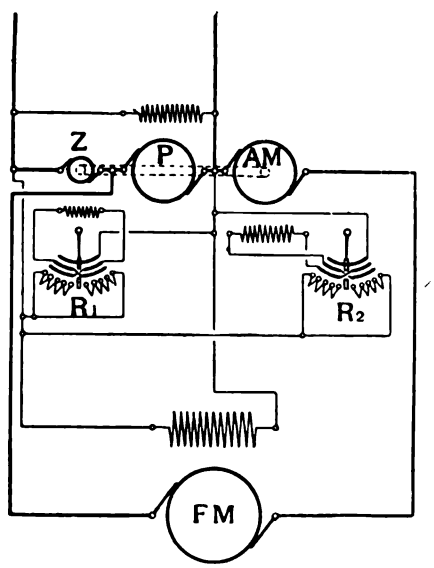

FIG. 503.—CONNECTIONS OF BUFFER SET.

When the winding motors are at rest, the starting dynamo produces the same voltage as the main generating plant, but in the *opposite* direction, so that the voltage at the terminals of the winding motors is *nil.* On starting, the excitation of the starting machine AM is diminished, thus augmenting the pressure at the terminals of the winding motors, so as to cause the latter to start, that is to say, as the opposing voltage lowers more current is supplied to the armatures of the winding motors. Their speed will thus increase according as the excitation of the starting dynamo is reduced, and when this becomes zero the speed of the rope in the shaft is then about half its normal value. The excitation of the starting machine is next reversed, so that its voltage is added to the line voltage, and the aggregate voltage reaches 1,050, when the speed of the rope attains its maximum.

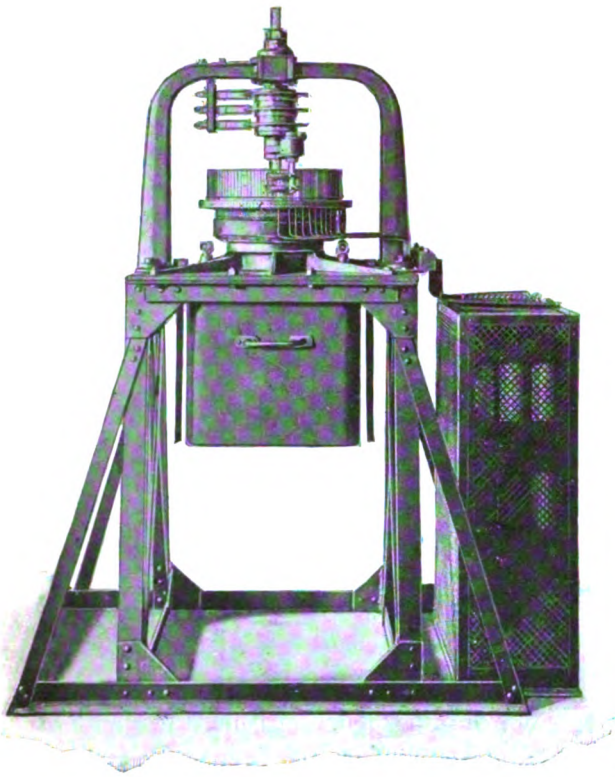

FIG. 504.—REGULATOR AND RESISTANCE.

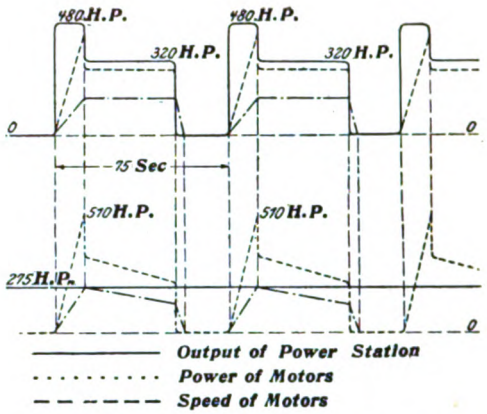

FIG. 507.—SPEED AND POWER DIAGRAM.

FIG. 505.—AUTOMATIC REGULATOR TO CONTROL SPEED OF FLYWHEEL.

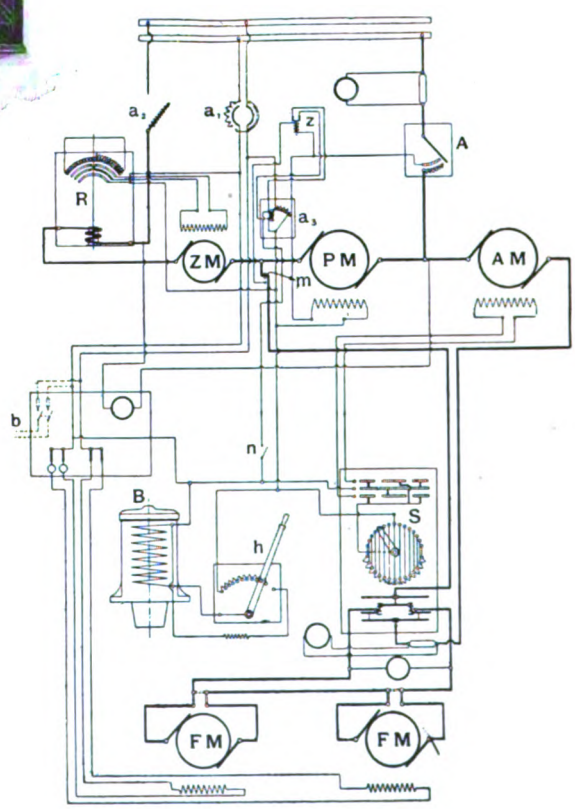

FIG. 506.—COMPLETE DIAGRAM OF CONNECTIONS.

During the time the winding motors are at rest the flywheel is absorbing energy, and the buffer motor P will be running at a high speed. In previous examples it was shown that to regulate the input of current from the main supply it was necessary to introduce a governor controlling a resistance in the shunt winding of the motor driving the flywheel. In this case the booster Z takes the place of the governor, as by adding or deducting the voltage generated by the booster by means of a regulator in its excitation circuit, the pressure applied by the terminals of the buffer motor can be varied to suit the speed. As the speed of the set falls at starting, the flywheel gives out its energy through the starting dynamo AM.

The regulator, with its resistance, in connection with the electrical winding gear at the Tiremande mine, is shown in fig. 504; it is placed on the guide pulley platform, and worked from the driving platform through bevil gearing. This regulator is made automatic by the addition of an electromagnet to the automatic regulator, excited by the main current supplied by the central station, and is shown in fig. 505. As soon as an increase in current strength occurs, the regulator will reduce the speed of the buffer set, enabling the flywheel to give up its energy, while in the same way it augments the speed when the output begins to decrease.

A complete diagram of connections is shown in fig. 506, F M being the winding motors; Z M, booster; P M, buffer motor; A M, starting dynamo; A, motor starter; S, controller; R, automatic regulator; B, brake magnet; m, maximum relay; h brake lever; a_1, switch; a_2, automatic maximum switch; a_3, automatic maximum and minimum switch; n, emergency switch; b, lighting circuit; z, time relay. As will be seen, the emergency switch does not break the main current, but only the small current traversing the cores of the automatic device a_3, which in turn cuts off the main current so as to demagnetise the electromagnet of the brake gear, and thus release the counterweight. In front of the driver is also another lever, the least displacement of which cuts off the current, disengaging the counterweight of the brakes, so as to stop the machine almost instantaneously. In order to preclude any injury to the machines due to a too abrupt starting, instead of a dashpot arrangement, a set of automatic devices has been provided in connection with a time relay z, which allows them to work only in case the overload lasts too long.

Fig. 507 shows graphically the fluctuations in power supplied to the motors, as well as the power and speed developed by the motors. The straight line representing 275-horse power, shows the constant power supplied by the power station, whilst the maximum power given out by the motors is 510-horse power.

Mechanical appliances for the prevention of overwinding, whilst practically compulsory on the Continent, have met with little favour in this country. Even a

detaching hook to release the rope in the event of overwind is not always adopted; usually, however, they are now always provided for in new, or where colliery headgears are being rebuilt. Whilst the detaching hook forms a safety link between the rope and the cage, it is not an absolute one, as the ascending cage may be wound up so quickly as to rise, even after the drum has ceased to revolve, with such a velocity as to smash the overhead suspending gear, with most disastrous results, as, the rope being detached, unless safety keps are provided in the headgear, there is nothing to prevent the cage from falling back to the pit bottom. It, moreover, affords no protection to men in the descending cage, and whilst men in an ascending cage, in the case of an overwind, have been safely suspended by the detaching hook, very serious accidents—often involving serious loss of life—have occurred, by the descending cage being violently dashed on to the pit bottom. So serious have accidents of this description become, that the question of having two men at the handles of the engine during the time men are being raised or lowered has been considered.

To obviate the risk of such accidents, many appliances have been brought out, to ensure the slowing down or stopping of the engine when near the surface, or immediately above the stopping place. Some of these appliances are regulated by governors; if the speed of the engine increases beyond a certain limit, the apparatus comes into action through trip gear, and shuts off the steam and applies a steam or other brake. Abroad, a common appliance consists of a nut working on a long screw—which also represents a cage indicator—arranged to strike a trip lever in the case of an overwind, which releases a heavy weight on the end of a brake lever, thus applying a powerful brake. Others are brought into action by the cage striking levers arranged in the headgear, when it is raised a certain height above the flatsheet level or stopping point. All such appliances are more or less complicated, and only come into action *after* the engine is out of the control of the engineman; and, moreover, all more or less require the presence of a *skilled and trained* man at the handles of the engine. None of the appliances are so absolutely certain in their action as to enable anyone, whether trained or not, to handle the engine, and consequently it is necessary to specially train men to operate each winding engine. Another objection is that they are likely to get out of order and to be neglected, so that when an overwind does occur they are either disconnected or fail to operate for some reason or other.

The author's patent automatic gear has been designed with a view to *absolutely prevent* overwinding, and to enable the engine to be handled, when raising or lowering men, with perfect ease and safety by an *unskilled* person. Fig. 508 shows a general arrangement of one form of the gear, which may be modified to suit different engines. This gear is applied to the ordinary reversing-link motion in such a way

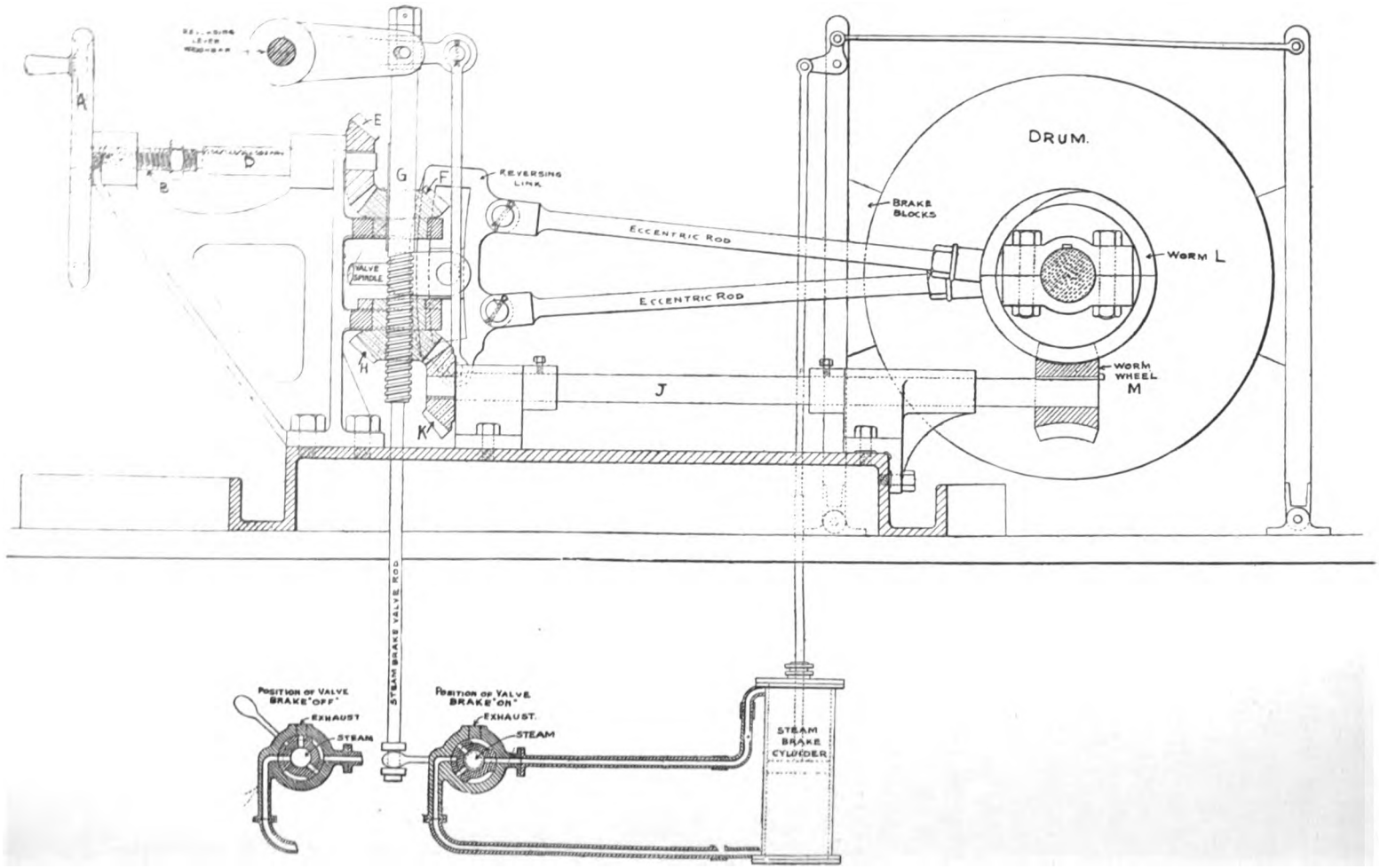

FIG. 508.—FUTERS' PATENT ABSOLUTE SAFETY WINDING GEAR.

that a handwheel takes the place of the reversing lever, and the starting and stopping, direction of rotation, and speed, are all controlled by simply turning the handwheel in either direction. As will be seen from fig. 508, it consists of a handwheel A, mounted on a screwed spindle B, working through a screwed boss of a bracket C, and fitted telescopically into a spindle D, carrying a mitre-wheel E. The reversing weigh-bar has an arm fixed to it, and this is attached to a vertical screwed spindle G, which is keyed to a mitre-wheel F by means of a sliding feather, and is screwed into a mitre-wheel nut H, which has a fixed position vertically on the bracket C. This nut H gears with another mitre-wheel K attached to a spindle J, on the other end of which is keyed a worm wheel M, gearing into a worm L fixed upon the crank shaft of the engine.

The action of the appliance is as follows :—On the handwheel A being turned, the motion is transmitted to the vertical spindle G by means of the mitre-wheels, and the mitre-wheel nut H being held stationary, the vertical spindle G rises or falls according to the direction in which it is turned, and, being attached to the reversing weigh-bar, it raises or lowers the links, which start the engine, steam being either always on or controlled by a stop valve. Immediately the engine starts, the worm L on the drum shaft acting through the worm-wheel and mitre-wheel, turns the mitre-wheel nut H, and so long as the mitre-wheel nut and the vertical spindle G turn in the same direction, and at the same rate, no up-or-down motion of the vertical spindle G will take place, and the reversing links will remain stationary. On the handwheel A being stopped, the vertical spindle G stops also, but the mitre-wheel nut continues to be turned by the engine, and raises or lowers the vertical spindle G, and, consequently, the reversing links, until they are brought to their mid-position, and then the engine stops. The handwheel spindle B being screwed and provided with stops, it follows that the number of revolutions is limited to the distance between the stops and to the pitch of the screw. By properly proportioning the number of revolutions of the handwheel A to the number of revolutions of the drum required for the distance of the wind, there can be no overwinding, as the handwheel A cannot be turned further once it comes against the stop, and then to move the engine the handwheel A must be turned in the opposite direction, and this reverses the engine. Further than this, the handwheel A must be kept in motion, or the engine stops, and, consequently, should the engineman be seized with any sudden illness so as to prevent him from turning the handwheel or to lose his presence of mind, in which case he would simply stop turning, when raising or lowering men, no accident to the men could occur, as the engine and cages would simply come to a standstill. Finally, as the engine is absolutely controlled both in speed, starting, stopping and reversing by the one handwheel, which can only be turned a fixed number of times in either direction,

no skill or training is required of the engineman, and in cases of emergency the engine could be *handled by anyone with absolute safety.*

The spindle G also automatically controls the steam brake. As shown, the lower part of the spindle is extended to form a valve rod, and works a special steam brake valve, by which the steam is admitted, from the centre of the valve through ports to the top or bottom of the steam brake cylinder, for the purpose of applying or releasing the brake. When the handwheel A is turned so as to raise or lower the reversing link, it also puts the steam brake valve into position for releasing the steam brake; and when the engine automatically raises or lowers the reversing links to stop the engine, it simultaneously turns the steam brake valve, so as to apply the brake, which of course may be proportioned so as to give any amount of braking power. At the same time, it is important to notice that the steam brake is applied *gradually* and the momentum of the moving parts is thus absorbed gently. Moreover, in whatever position the engine is standing the brake is "full on."

The apparatus can be arranged to be thrown out of use when drawing coals by the addition of two small couplings, one on the reversing lever weigh-bar and the other on the spindle J, connecting the worm-wheel M and the mitre-wheel K. Or should it be required to wind coals with the gear in action, and the constant turning of the handwheel would be too tedious an operation, a small motor may be used for this purpose, driving the handwheel through a small friction clutch, and controlled by a simple reversing, starting and regulating switch. When drawing men the clutch should be thrown out of gear, and the handwheel then worked by hand.

In the case of heavy engines, where it is necessary to have steam reversing apparatus, the motor could be sufficiently powerful to take the place of the steam reverser, and would be controlled by a simple starting and reversing and speed-regulating switch. In either case, the motor being arranged to work with a friction clutch, the clutch would slip in case the motor continued to turn after the horizontal spindle B was screwed up to the stops; or by means of an automatic quick-break switch, the motor may be made to stop after a certain number of revolutions corresponding to the number of revolutions of the handwheel spindle B, but the actual number of revolutions of the engine and drum would be absolutely fixed by the stops. Where it is necessary to change decks of the cages, movable stops are provided in addition to the fixed stops. When dropped into position the movable stops allow the cage to run to the first deck, when they are lifted out by means of a small foot lever, and the cage may be then manipulated by the hand-wheel. Supposing, however, the stops were left out, it is easily seen the cage could only run far enough to bring the bottom deck on a level with the flatsheets.

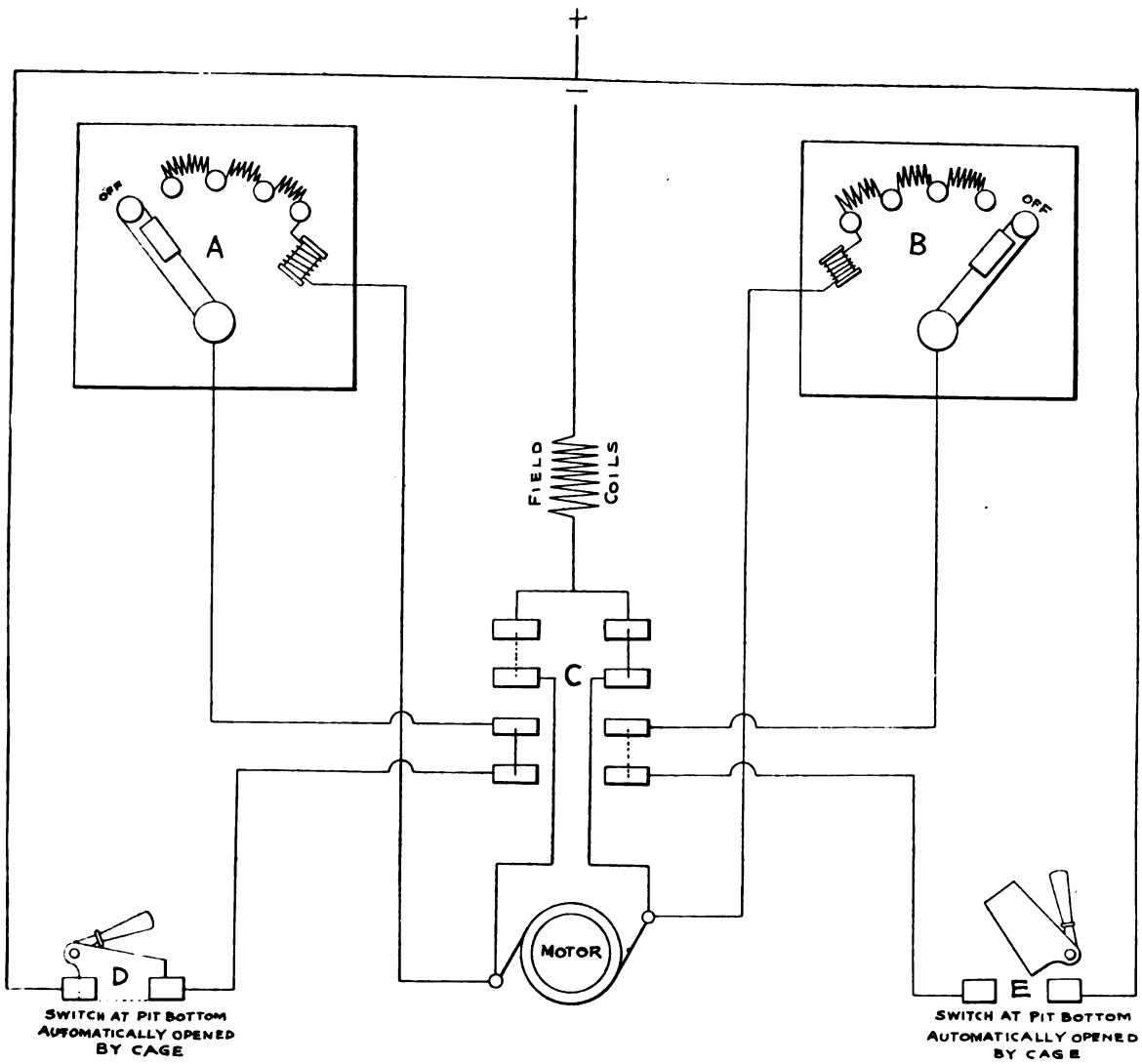

FIG. 509.—DIAGRAM OF ELECTRICAL CONNECTIONS—FUTERS' SAFETY GEAR

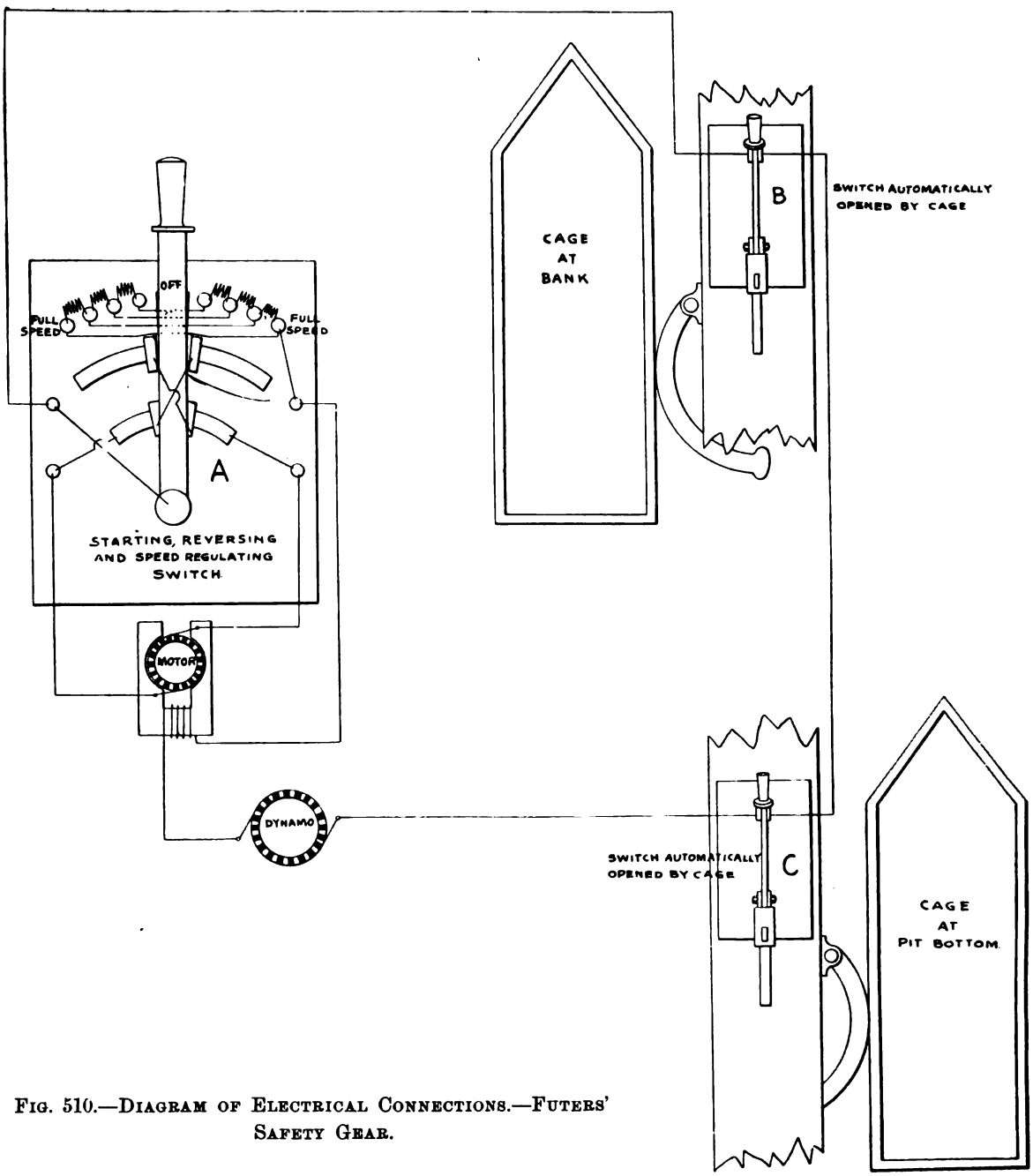

FIG. 510.—DIAGRAM OF ELECTRICAL CONNECTIONS.—FUTERS' SAFETY GEAR.

For small winding engines, the safety winding gear can also be arranged to be worked with absolute safety by the banksman, the winding-engineman being altogether dispensed with. In this case the handwheel is driven by a small series-wound motor. Fig. 509 shows the electrical connections for this purpose. A and B are two ordinary starting switches with a small holding-on magnet and no-voltage release. C is an automatic quick-break switch, worked either by the engine or the motor. This switch has movable contacts arranged upon a barrel, which has two positions, one in which the circuit is closed for the motor working in one direction, and the other for the reverse; and it is always in one or other of these two positions. Special switches are also fixed at the pit bottom which are automatically opened by the cages, making it impossible for the banksman to move the engine before the onsetter at the pit bottom is ready and has given the signal. Following the diagram of connections, fig. 509, and assuming that the automatic switch is in the position to make contact, as shown by the full lines, and the switch D at the pit bottom is closed, if the starting handle on the switch A is pushed over, the motor at once starts the winding engine, so as to lower the cage on the side nearest to the switch, and the handle is kept over by the holding-on magnet. Immediately the motor or engine revolves, a small worm and quadrant come into operation, which at the end of the wind causes a spring to come into action, so as to turn the switch barrel quickly over; breaking the electrical circuit in connection with the switch A, and making contact to close the circuit in connection with the switch B. Simultaneously the switch D is opened automatically by the cage on reaching the pit bottom. At once the electrical circuit is broken, the current is cut off from the motor, and the handle on the switch A flies back to the off position, and it is then impossible to start the engine by this switch, as the electrical connection is broken (*a*) by the automatic switch C, and (*b*) by the switch D at the pit bottom. Moreover, the banksman cannot start the engine, as before stated, in the reverse direction, until the onsetter at the pit bottom closes the switch E. It is important to notice that should any of the electrical connections break or the current fail during winding, the engine and cages would simply come to a stop.

Another not unfrequent source of accident under present conditions of winding —many unfortunately with fatal results—is due to the engineman starting the engine before receiving the proper signals both from the banksman and onsetter, and fig. 510 illustrates the electrical connections of an arrangement in which the engineman is retained, but by means of an electrically controlled apparatus, he cannot start the winding engine until the circuit is completed by both the banksman and the onsetter, and, moreover, should either the banksman or onsetter require to stop the engine after it had started for any reason, either of them could do so

without the co-operation of the engineman, and independently of the other. As shown in fig. 510, A is a starting and regulating switch controlling the motor in the engine house, and worked by the engineman; B and C are two switches at the top and bottom of the pit respectively, and so arranged that they are thrown out automatically by the cages, and that the circuit is broken both at the top and bottom of the pit. Before the engineman, therefore, can start the winding engine, both the banksman and the onsetter must close the switches B and C, and keep them closed until the cages have moved, as they are so arranged that they will not remain closed so long as the cages are at the top and bottom of the pit respectively. At the same time as the circuit is closed, an electric bell may be arranged to ring at the various points, namely, in the engine-house, on the bank top, and at the pit bottom, so that each one is aware that the engine may start.

Generally, the advantages claimed for this gear and its modifications which may be varied, are as follows:—(1) The prevention of accidents; (2) simplicity and ease in working the winding engine, a skilled winding engineman not being required; and (3) economy in steam consumption, as the steam being always on, the pipes and valve-chests are always kept at one temperature, thereby reducing to some extent the losses due to condensation; and as the speed of the engine is regulated by altering the position of the "links" and admitting high-pressure steam, which is more or less expanded, the losses due to throttling at the steam valve are avoided. (4) Another point of considerable importance is that, supposing the descending cage to be heavily loaded, or sufficient momentum to be stored in the moving masses, so as to pull the engine round after the handwheel had stopped, and the engine kept turning after the links had reached the mid-position, it would automatically *reverse* and put *steam against* the engine. It is, however, practically impossible for this to occur, if the steam brake be provided.

The automatic gear may be equally as well applied to electrical winding installations. In this case the gear would be arranged to act upon the starting and regulating switches, controlling the motor or motors working the winding drums, in much the same way as upon the reversing link mechanism of steam engines. A magnetic brake would in this case take the place of a steam brake.

As previously stated, a detaching hook is now considered an essential part of a winding equipment. This consists of an arrangement which, on being drawn through a cylinder, or a circular hole in a plate, fixed to strong overhead beams, disengages the rope from the cage, and leaves the latter safely suspended. There are many designs, good, bad and indifferent; a good detaching hook should be absolutely secure against working loose or to allow the rope to become detached during ordinary winding, or by anything accidentally falling down the shaft and striking it; in case of an overwind, the rope should be smoothly and quickly

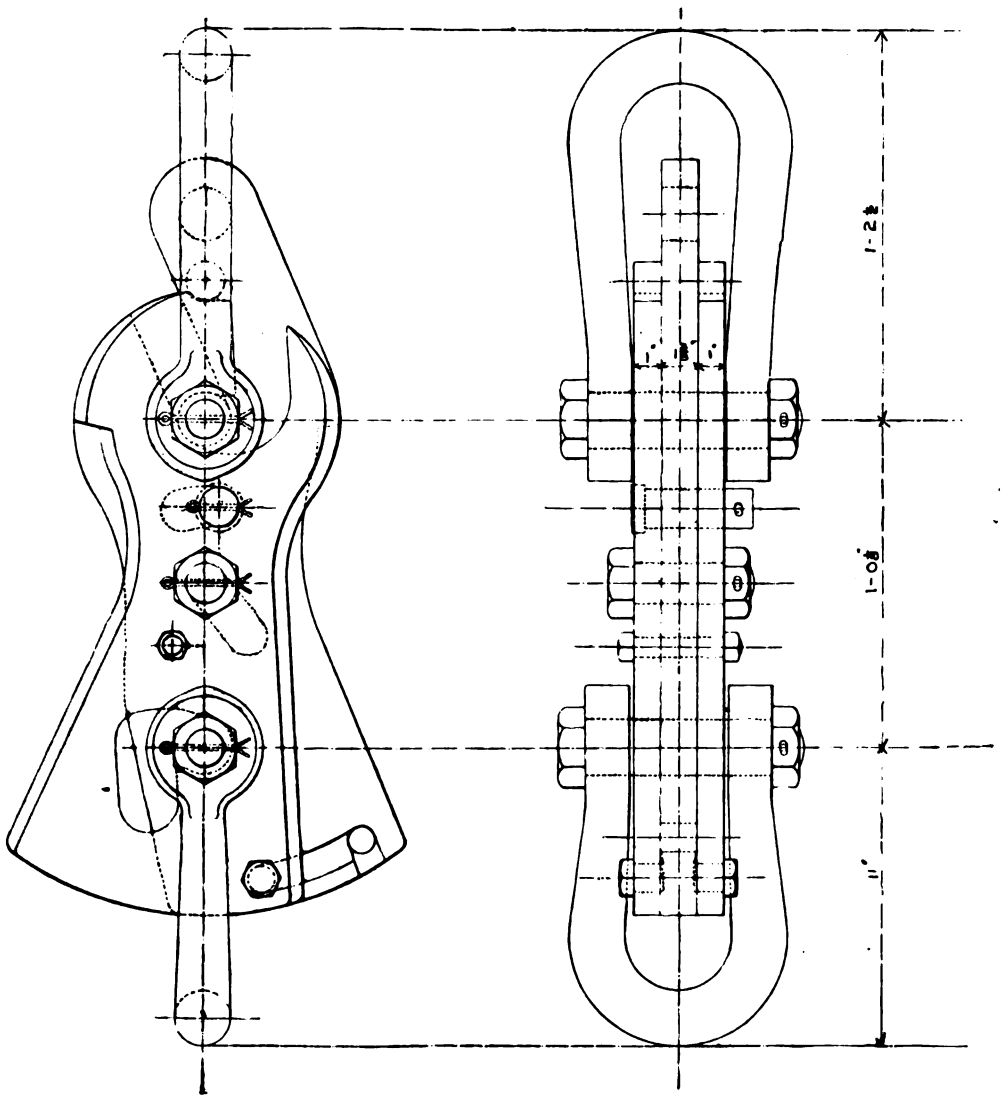

FIG. 511. FIG. 512.

ORMEROD'S DETACHING HOOK.

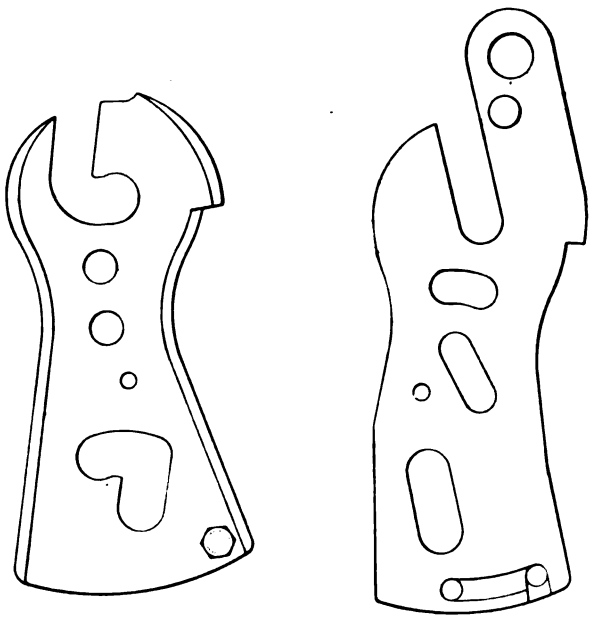

FIG. 513. FIG. 514.

SEPARATE PLATES OF ORMEROD'S HOOK.

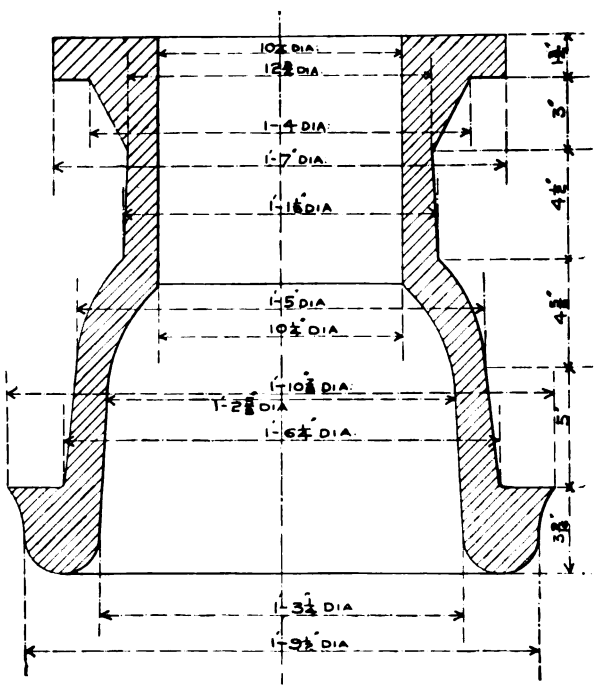

FIG. 515.—CYLINDER FOR ORMEROD'S HOOK.

detached, and the suspending points should be in position to prevent the cage being lowered before the rope is freed, in order to prevent a partial overwind; and, finally, it should be capable of being quickly released so that an overwind in ordinary coal-drawing should not cause a delay of more than a few minutes.

One of the best known detaching hooks is that of Ormerod's, shown in figs. 511 and 512. This consists of three plates, secured by a bolt in the centre; the separate plates are shown in figs. 513 and 514, fig. 513 representing one of the outer plates which are made right and left hand, whilst fig. 514 represents the middle plate. Assembled together in working order as shown in figs. 511 and 512, it will be seen the weight is carried by the outer plates, the middle plate merely pressing against the bolt of the top shackle to keep it in place, and is prevented from moving by the small copper bolt shown a little to the left below the centre bolt. The bottom shackle bolt is carried in a slotted hole in the outer plates; and the top pin shown above the centre bolt as well as the pins on each side of the upper part of the middle plate prevent this latter from moving vertically. The hook is designed to work in a cast iron cylinder shown in fig. 515, which is thoroughly secured to strong beams. When an overwind takes place, the hook is drawn into the cylinder, which causes the lower part of the plates to be pressed together, and the upper part to open out, the plates turning on the centre bolt. The middle plate, on being forced inwards, shears the copper bolt, and displaces both top and bottom shackle bolts, freeing the former, whilst the latter drops with the cage into the vertical slot in the outer plates, which thus locks the plates in the position to catch the top of the cylinder as shown in fig. 516, which represents the hook in position after an overwind.

To release the hook and cage, the rope shackle is attached to the hole in the upper part of the middle plate, and after the pin above the centre bolt has been removed, the cage is raised by the middle plate alone until the weight is removed from the outer plates, which may then be closed at the top and lowered through the cylinder. The cage is then rested on the keps or otherwise supported, and the hook quickly put in proper working order by the addition of a new copper bolt. At the bottom of the outer is a small set bolt, which assists in keeping the middle plate in position, so that the whole of the responsibility does not rest on the copper bolt. When an overwind takes place, these set bolts are forced out of a small recess, and travel in inclined grooves formed in each side of the middle plate, and which force the plates a little apart from each other until they reach the end of the grooves, when the bolts drop into another recess and the plates spring together again and lock them after an overwind.

Another excellent detaching hook, as manufactured by Messrs. Jos. Wright and Co., is shown in fig. 517. This is known as King's, and, like Ormerod's, is of the

plate type. It, however, consists of four plates; one of the two outer is shown in fig. 518, and one of the middle plates in fig. 519; both are made right and left. A distance piece, fig. 520, is fitted between the outer plates where the cage-shackle bolt passes through. The outer plates support the cage shackle, but only the inner plates, which are thickened at the top, carry the rope-shackle bolt, all four plates

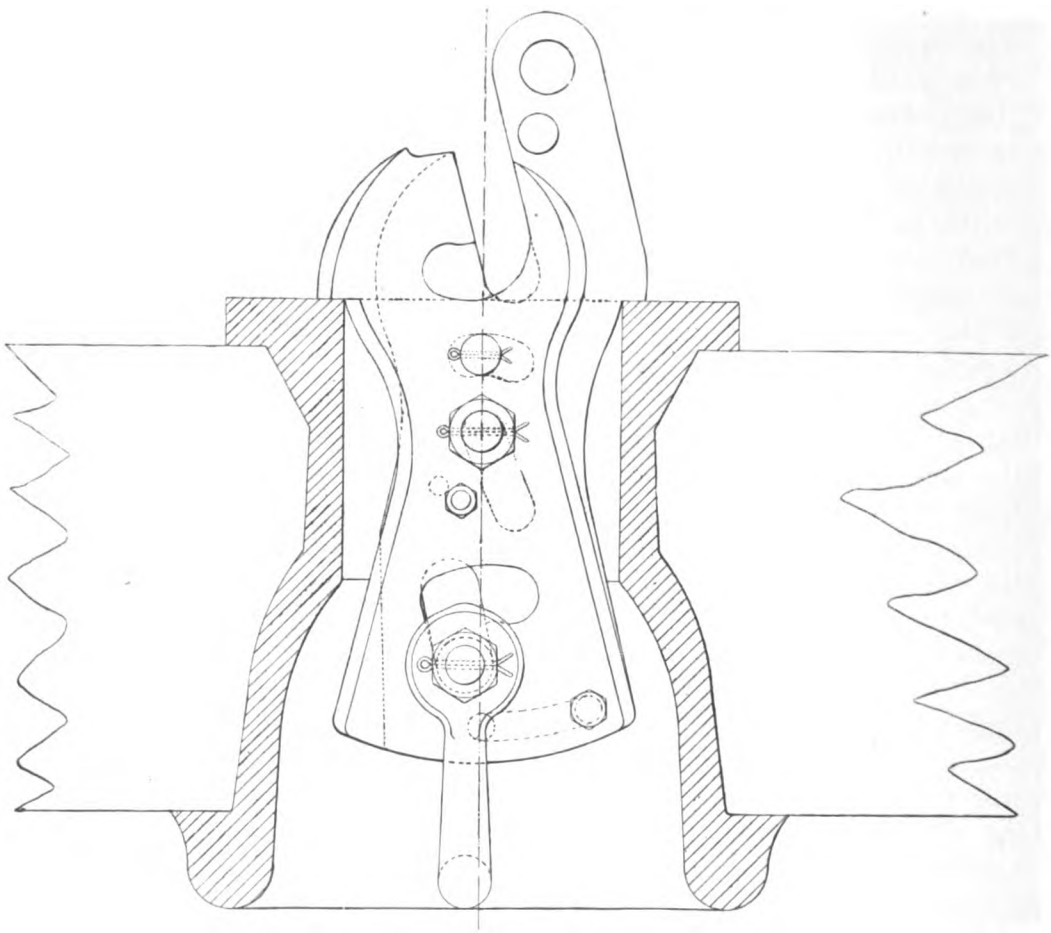

FIG. 516.—ORMEROD'S HOOK AFTER AN OVERWIND.

being held together by a bolt in the centre, which is thus in "shear." In Ormerod's hook the centre bolt has merely to keep the plates together, but in King's hook it is seen the whole strain comes upon the centre bolt. As before, a copper bolt keeps the plates in position, and, as assembled together in working order, are shown in fig. 517. The hook works through a circular hole in a plate secured to the cross beams, as shown in fig. 521, which represents the hook *in situ* after an overwind

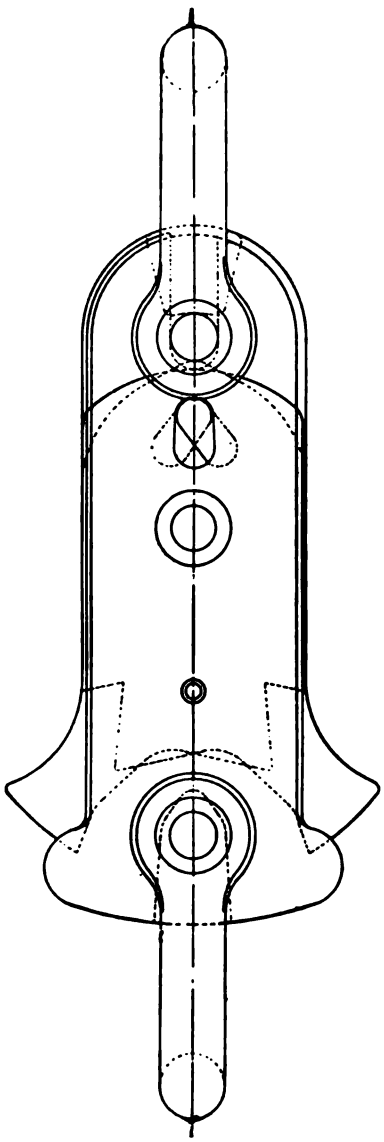

FIG. 517.—KING'S DETACHING HOOK.

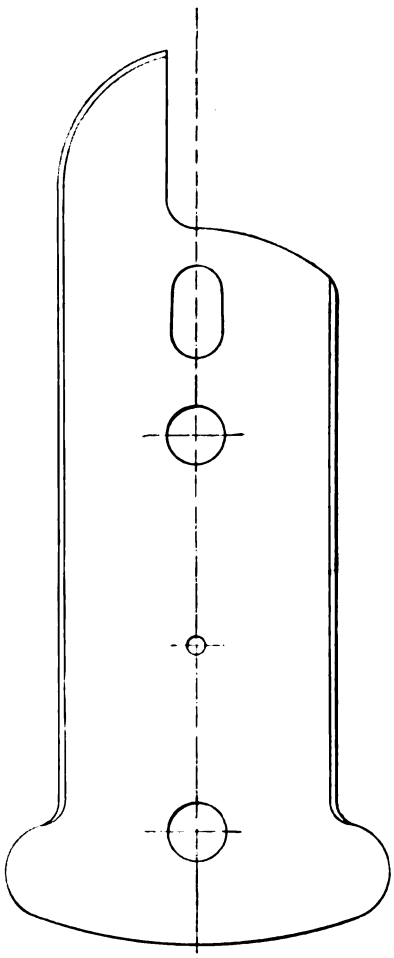

FIG. 518.—KING'S HOOK.
Outside Plate.

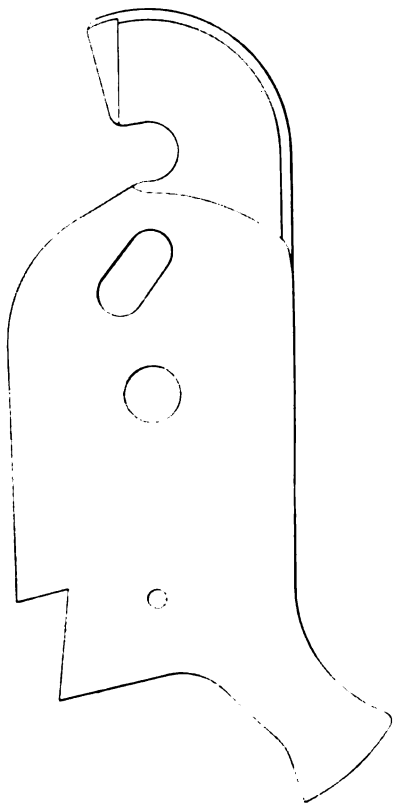

FIG. 519.—KING'S HOOK.
Inside Plate.

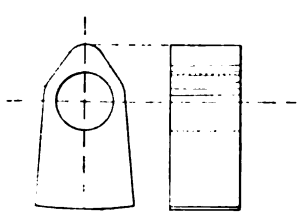

FIG. 520.—DISTANCE HOOK.

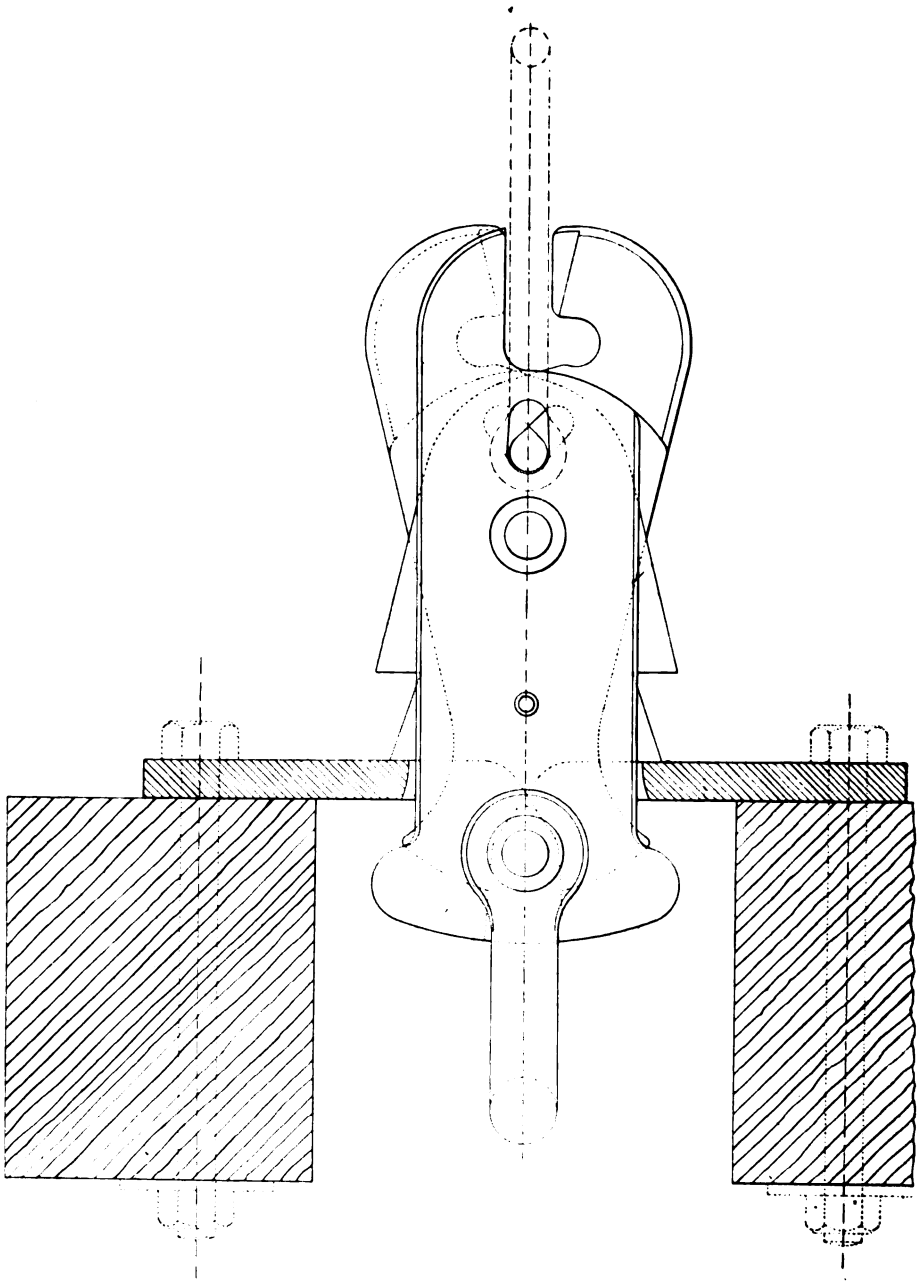

FIG. 521.—KING'S DETACHING HOOK AFTER AN OVERWIND.

has taken place. On being drawn through the plate, the lower part of the inner plates comprising the hook which project, as shown in fig. 517, are pressed inwards, the upper part moving outwards and thus releasing the rope-shackle bolt. In moving outwards to release the rope, the inner plates of the hook are so shaped as to project above the catch plate secured to the baulks, and thus prevent the hook with the cage from falling. It will be noticed the catches are in duplicate, so that should a partial wind occur, and slightly displace the inner plates, though not

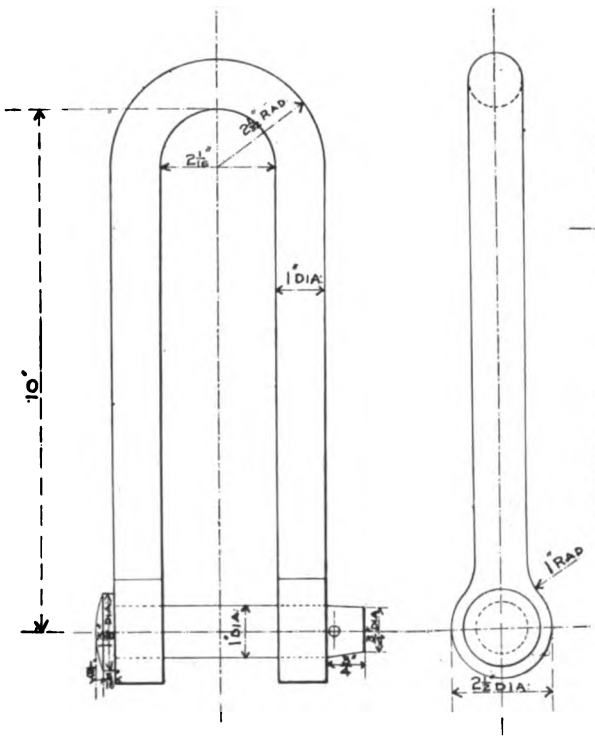

FIG. 522.—LONG SHACKLE FOR KING'S HOOK.

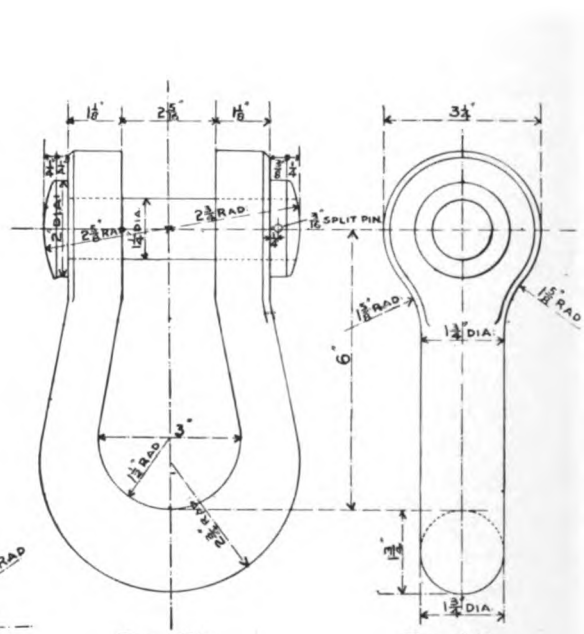

FIG. 523. FIG. 524.

SHACKLE FOR KING'S HOOK.

sufficiently so to release the rope, the upper projections on the inner plates would prevent the hook from returning.

To lower the cage after an overwind, a long shackle is used, shown in fig. 522, the bolt of which passes through the elongated holes or slots in the four plates immediately above the centre bolt, which are so arranged that after an overwind the slots in the inner plates are about at right angles to each other, but directly opposite to the position occupied when in working order. In the latter—see fig. 517—the bolt can only be passed through the hole formed by the four

plates in the upper part of the slots, after an overwind in the lower. In fig. 521 the shackle is shown by the dotted lines in position ready for lifting, and it is easily seen that as the weight comes upon the bolt, it will slide in the vertical slots of the outer plates and force back the inner plates to the position occupied previous to the overwind, when it may at once be lowered through the catch plate. After the cage is supported, a very few minutes need only be occupied in changing the rope shackles and fitting a new copper bolt when the hook is again in working order. The top and bottom shackles for this hook are shown in figs. 523 and 524.

West's patent simplex detaching hook is one which is both simple in construction, certain in action, and the shape and disposal of the working parts ensures great strength and security.

Figs. 525, 526, and 527 show this hook in working order, while fig. 528 shows the hook after an overwind has occurred. As will be seen, it consists of a forged steel block or box, fitted with a pair of sliding catches, shown separately in figs. 529 and 530. A long slot in the box, just wide enough to allow the pin of the inverted rope shackle—which is a special forging—to move freely, determines the position of the pin in the box, in conjunction with the slots in the sliding plates. In working order these plates overlap and cover the width of the slot, so that all that portion of the sliding catches equal to the depth of the slot is in "shear," and the forces acting directly in opposition to each other, there is no tendency to slip.

The block works through a circular hole in a catch plate secured to the overhead beams. On being drawn through this hole, the wedge-shaped part of the sliding plates causes them to be pressed inwards, and the catch part outwards, at the same time releasing the rope. After an overwind the rope is coupled to the hook by a pair of shackles whose pins pass through the holes shown in the upper part of the block on each side of the slot, when the block with the cage may be raised sufficiently to allow the sliding catches being returned to their normal position, when the cage may be lowered on to the keps and coupled up ready for work in a very few minutes by fitting a new copper pin and replacing the rope shackle. A partial wind with this hook is impossible, as the rope shackle pin on being once released moves the catch part of the sliding plates out to the fullest extent by means of the inclination of the slots. The bolt shown on the right, which is half in the sliding plates and half in the bottom of the block, just allows these plates to slide the required distance, and prevents them sliding out when coupling up again after an overwind. The plates are kept in working position by a copper rivet shown on the left.

An entirely different type of hook is that manufactured by Messrs. T. Walker and Son. This, as shown in figs. 531 and 532, consists of a pair of jaws, D D, working on a centre pin. These jaws are held together and made to retain

Fig. 525.
Elevation.

Fig. 526.
Side Elevation.

Fig. 528.
The Hook After an Overwind.

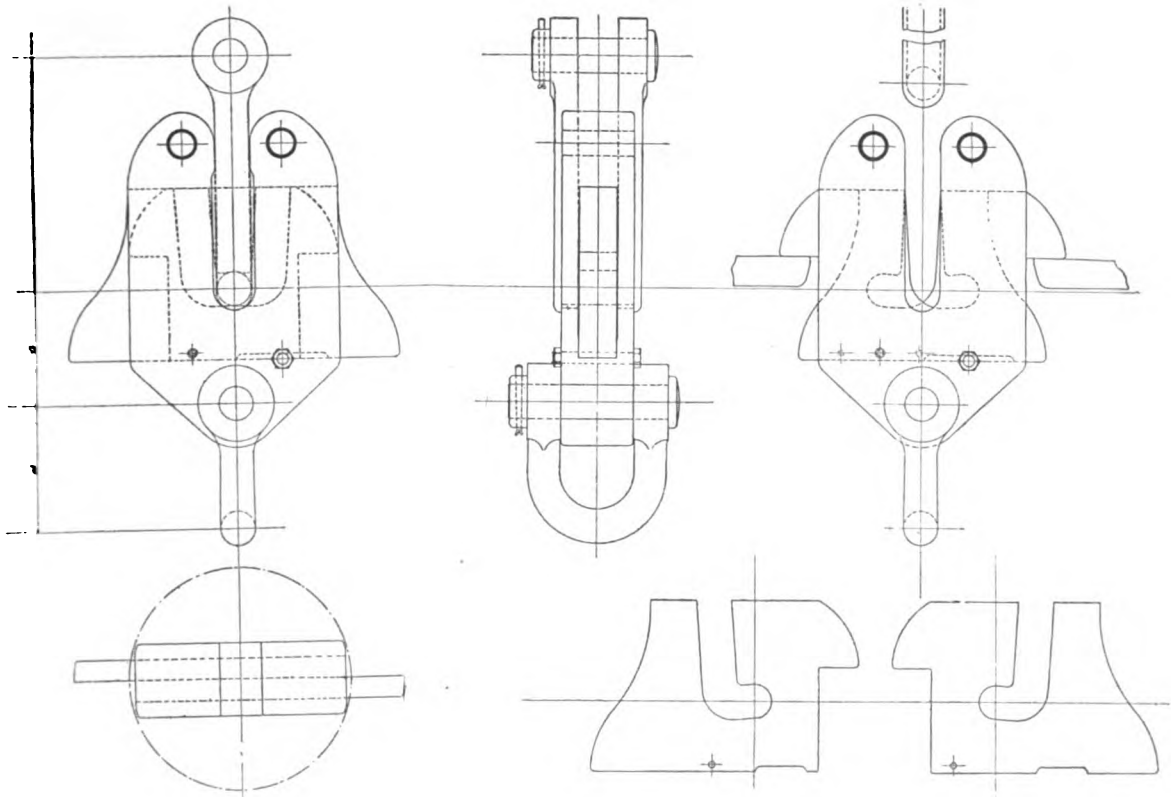

Fig. 527.—Plan.

Figs. 529 and 530.—Sliding Plates.

West's Patent Simplex Detaching Hook.

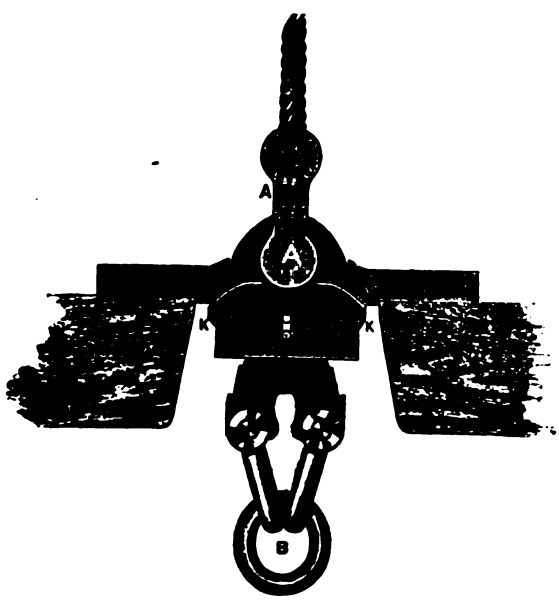

Fig. 531.

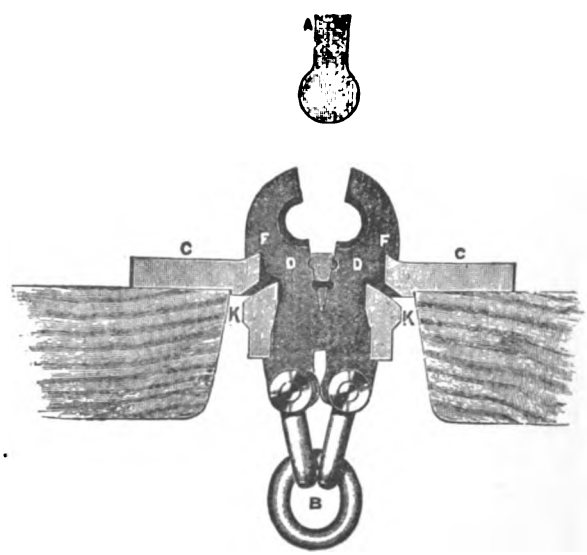

Fig. 532.

Walker's Detaching Hook.

a special shackle bolt A by means of the clamp K, which is kept in position by the copper pins H, and the outward pressure of the jaws due to the weight of the load, which is always tending to open them. In the hooks previously described it will be noticed the weight is depended upon to assist in keeping the plates in working position. The hook works through a circular hole in a special catch plate C. When an overwind takes place the jaws pass freely into the ring C, but

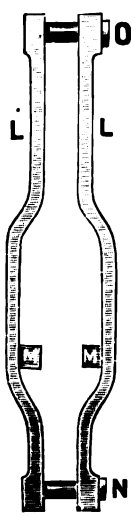

FIG. 533.

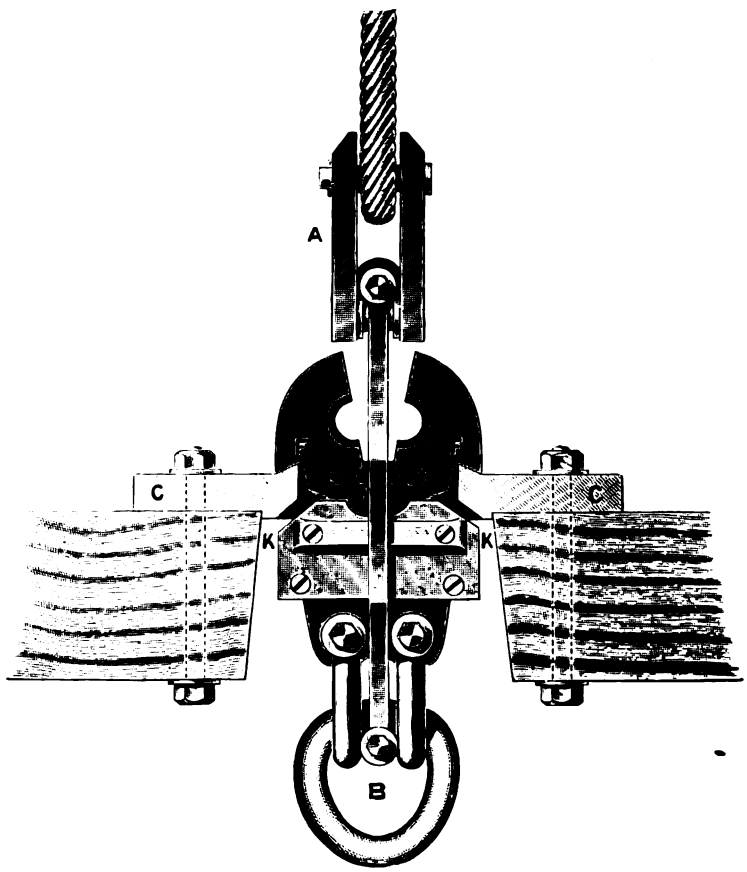

FIG. 534.

the clamp K, coming into contact with the ring, is held stationary, while the jaws are pulled through, shearing the copper pins, and the draw hooks F F are forced open by the lower limbs being drawn into the clamp, in which position they are firmly locked. In order to facilitate readily lowering the cage after an overwind, the apparatus shown in figs. 533 and 534 has been designed. This consists of a pair of links L L bolted together by means of the bolts O N, each link being

Fig 538.
Detail of Cage Hanger.

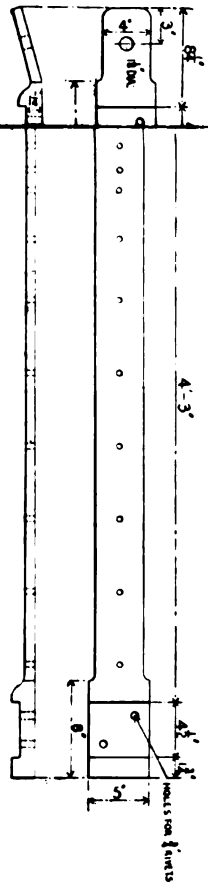

Fig. 539.

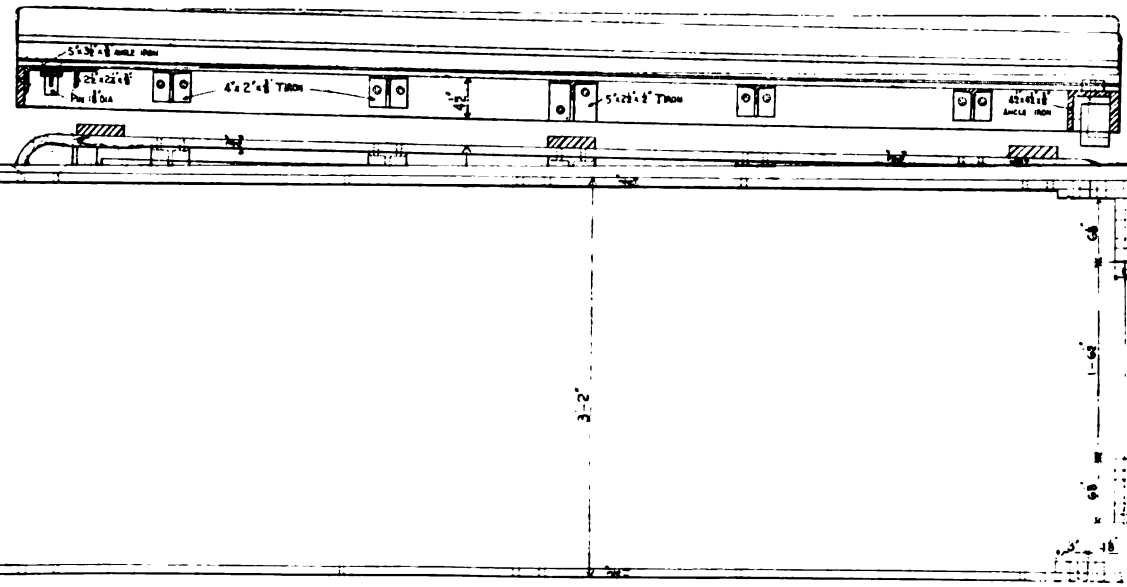

Fig. 543.

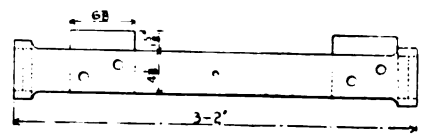

Fig. 544.

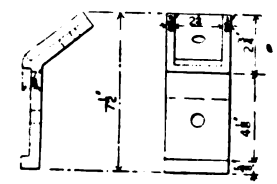

Fig. 545.

Figs. 542, 543, 544 and 545.—Detail of Top Hoop.

PLATE XXXVI.—*See page 274, 275, 276.*

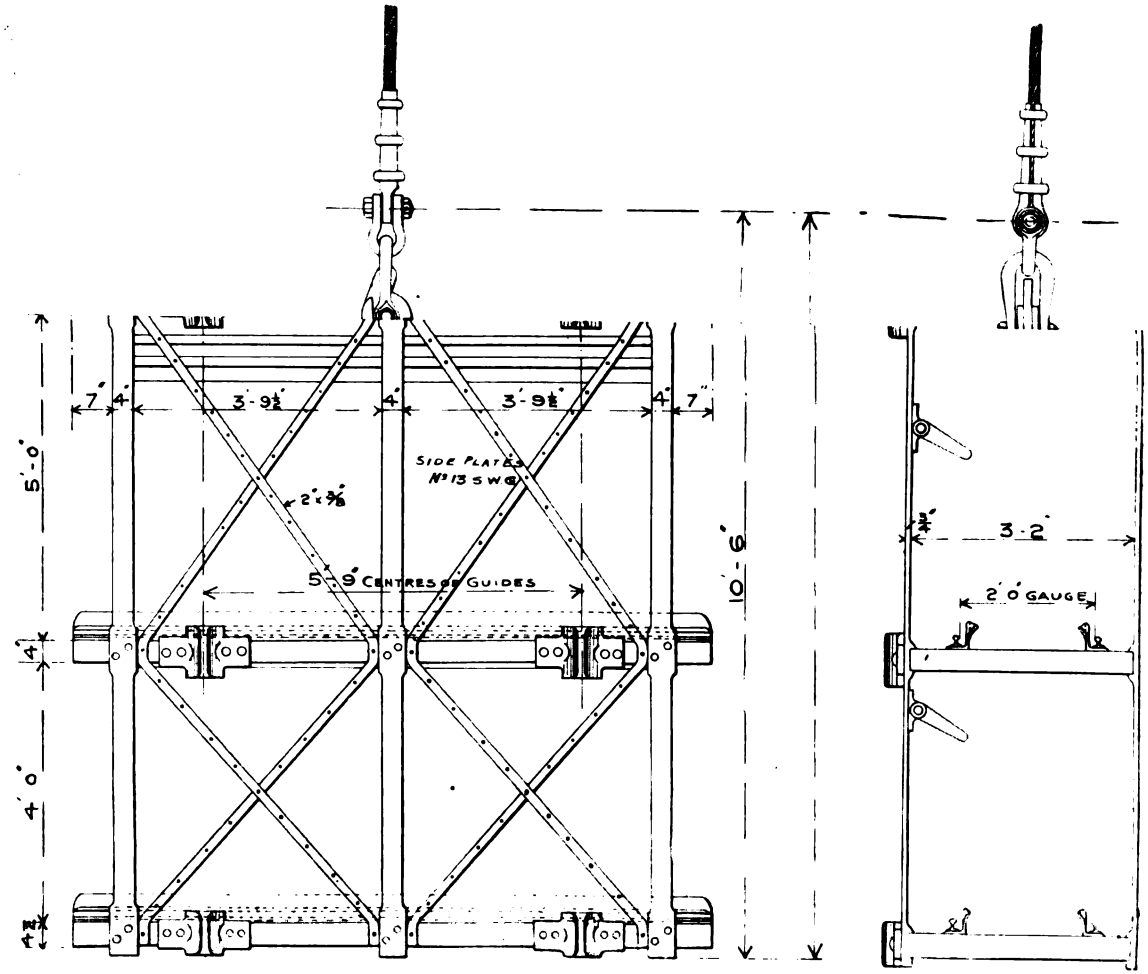

FIG. 546.

FIG. 547.

FIGS. 546 AND 547.—TWO DECK CAGE COMPLETE WITH CHAINS.

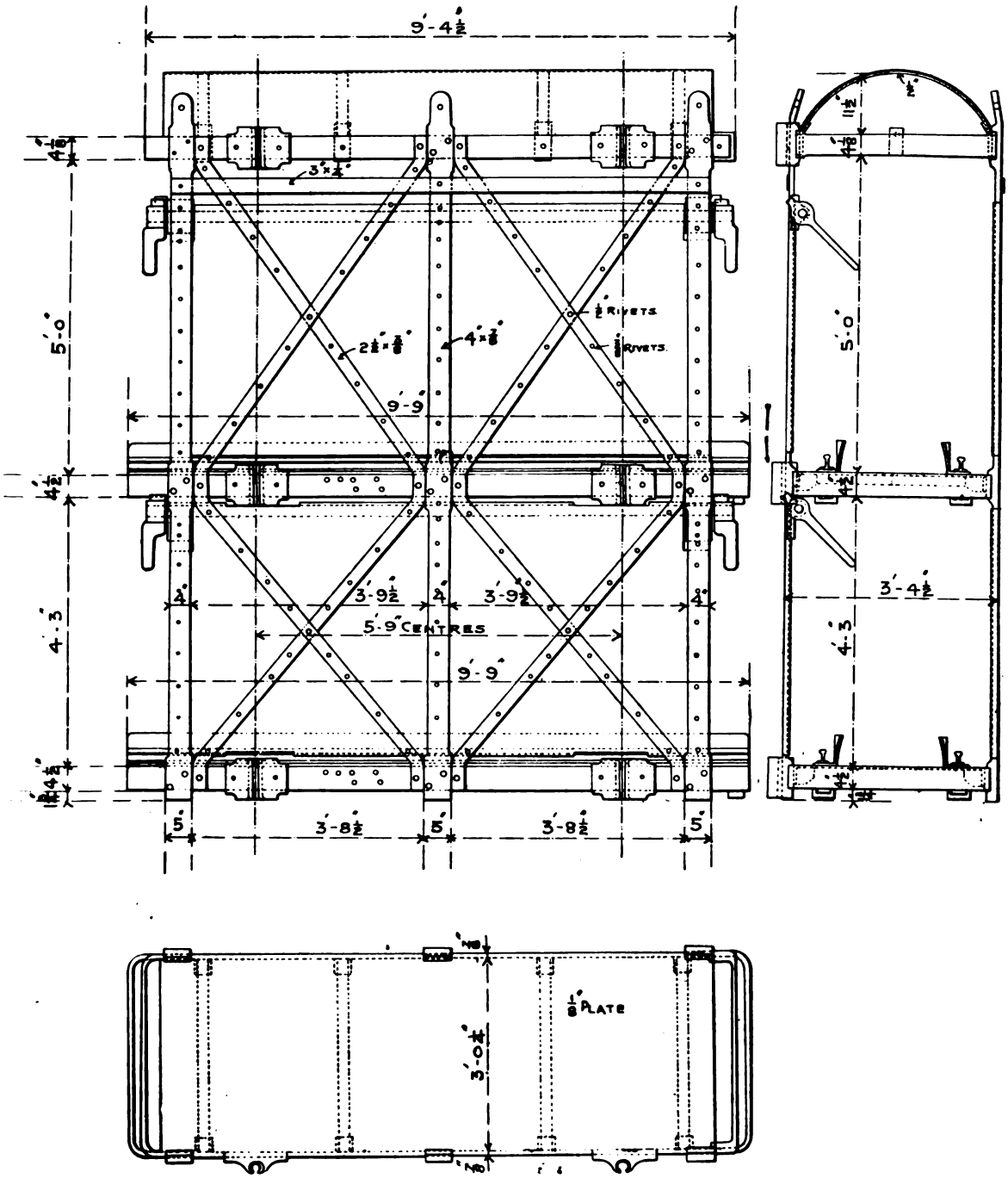

FIGS. 535, 536 AND 537.—DOUBLE DECK CAGE.

T

provided with a small projection M M. The ring B (fig. 534) as now made, is provided with an eye between the two shackles supporting the ring B to which the cage chains are directly attached. After an overwind the links are separated and passed through the ring plate C on each side of the hook. The bolt N is passed through the eye in the ring B, thus securing the lower end of the links to the cage, while the top end is attached to the rope as shown. In this position the projections M M just come under the clamp K, and by slightly lifting the cage and the clamp K, thus taking the weight off the jaws F, the latter may be closed sufficiently to allow them to pass through the ring plate, when the hook and cage may be lowered on to the keps.

All detaching hooks should be taken apart, annealed, cleaned and oiled, at least once in three months.

Cages should be constructed to be strong and serviceable, yet as light in weight as possible, if used for high-speed winding; as cages are usually balanced, a little weight in a slow-moving cage is not of much consequence. Almost each colliery has its own type of cage. Some are constructed for flat bars bent to shape, others from steel sections, such as channel, angle and tee bars, riveted together. In most cases they are suspended by chains, but in others chains are done away with, and the rope is directly coupled to the cage, with, of course, a detaching hook intervening. The advantage of the latter system is that it saves head room, but that is about all that can be said in its favour, and a certain disadvantage is the lack of flexibility between the rope and cage. When the cage is brought to rest quickly at the pit bottom, the rope may still freely descend when cage chains are fitted, but when attached directly to the cage, the socket of the rope rests upon the cage, and the rope tends to bend at the top of the socket with a most detrimental effect.

A cage does not, so to speak, get worn, but owing to the constant shocks is knocked out of shape, and the rivets or bolts holding the parts together become loose, and it is then necessary to take it out and rebuild; consequently a cage built of good material will last for years, but during that period will be several times taken apart and put together again. A cage should be designed, therefore, to withstand the shocks, and the rivets or bolts—usually riveting is adopted—should not altogether be depended upon to take shearing strains.

An excellent form of cage is that shown in figs. 535, 536 and 537. This shows a double-deck cage to carry four tubs, two on each deck, each tub carrying 10 cwt. of coal.

The hangers, which run the full length of the cage, are shown in detail in fig. 538 (Plate XXXVI); they are special forgings, and recessed to receive the hoops, which are riveted in place. The decks also consist of specially forged steel hoops, as will be

seen from figs. 539, 540 and 541, thickened at the ends, where they are fitted to the outside hangers; this is in order to strengthen them against bending when they are dropped upon the keps. A special feature of the decks is that the rails supporting the tubs are arranged to lift at one end, to form a gradient so as to allow the tubs to be easily run out. The hoop is stiffened by tee bars, and the rails are secured to deep angle-bars which, whilst stiffening the rails against bending under the weight of the tubs, act as a check rail, and prevent the tubs being thrown off the rails when "hanging on" quickly. Ordinarily the angle bars rest on the tee bars, and are secured at one end by pins riveted in place which fit into holes in an angle iron secured to the end of the hoop. At the other end the angle bars are fixed to another angle bar, to which cast steel blocks are attached.

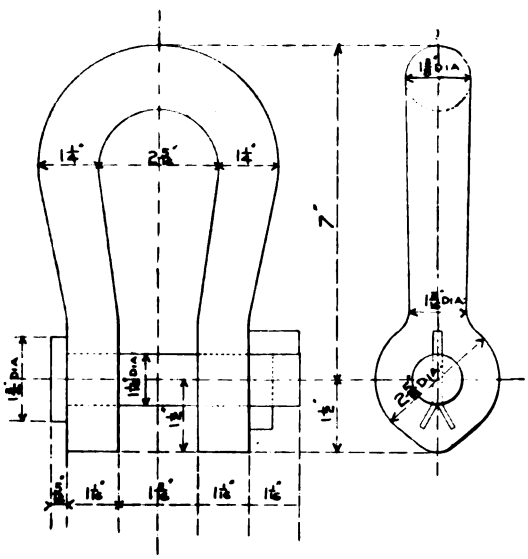

FIGS. 548 AND 549.—CHAIN SHACKLES.

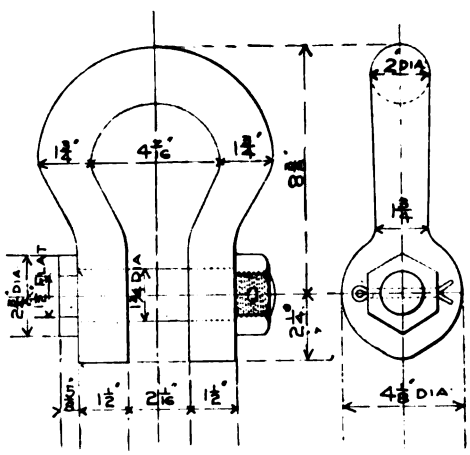

FIGS. 550 AND 551.

When the cage rests upon the keps these blocks raise up the angle bars and rails, thus forming an inclined way, as shown by the broken line. The floor is of wood between the angle bars, and is fixed to the cross tee bars; this floor does not move, and wood affords a more secure foothold than a smooth plate.

The top hoop is of special construction, as shown in figs. 542, 543 and 544, with a movable end, to allow horses to enter the cage, which without such provision would have to be made higher on this account. This hoop is also shorter than the bottom and middle hoops by an amount sufficient to clear the keps when in position for catching the cage. The reason for this is to prevent the cage being caught by the keps, should the banksman inadvertently not hold them out long enough to

allow the cage to clear. The roof is of sheet iron curved over bars fitted to the small forgings shown in fig. 545, which are fitted to the top hoop. This enables the roof to be easily removed. The cage is further stiffened by diagonal bars, and the sides are covered by sheet iron. The tubs are held in the cage by end snecks, fitted to a bar running the length of the cage, and capable of being revolved in brackets fixed to the hangers.

The cage runs in steel rail guides, and each hoop is accordingly fitted with cast steel shoes on one side.

Figs. 546 and 547 (Plate XXXVII.) show a similar cage complete with chains, balance beam, lengthener, Ormerod's detaching hook and rope socket. A detail of the shackle connecting the cage chains to the hangers is shown in figs. 548 and 549; the shackle connecting the pairs of chains to the balance beam in figs. 550 and 551; the balance beam, which is simply an iron or steel forging, in figs. 552 and 553; the shackle connecting the lengthener and balance beam in figs. 554 and 555; and the top and bottom shackles of the detaching hooks in figs. 556 to 559. All the above are for a working load of 6 tons.

Another cage with tilting bottom, by Messrs. Jos. Cook, Sons and Co., is shown in fig. 560. In this case, as will be seen, the cage bottom is hinged to the hoop by a pair of strong hinges, whilst the other end is fitted with strong brackets which rest upon the keps. Shoes are provided for wire rope guides, and being square in shape can be arranged to run inside fixed guides, at the top and bottom of shaft, to steady the cage during loading.

Another type of cage is shown in figs. 561, 562 and 563, whilst figs. 564 and 565 show another of similar construction, but to carry two tubs abreast. Both are constructed from flat bars forged to shape and bolted together. The bottom consists of a hard wood frame. They are lightly constructed, and not designed to withstand the heavy wear and tear such as occur at a colliery where the cages must be kept going as quickly as possible during working hours. The tubs are kept in the cage by axle catches, as shown in figs. 566 and 567. These consist of two pivoted levers, a foot lever and a balanced stop lever connected together, so that when the foot lever is pressed down, the end of the stop lever nearest the axle is also depressed, allowing the tub axle to pass over it. The foot lever is then kept down by the first or leading axle until the following axle has also passed the stop.

Cage snecks, tumblers, or catches are of various designs, and are sometimes arranged to work automatically, either by the cage striking a lever as it nears the surface or pit bottom, or when it is lowered upon the keps. As a rule, however, when properly designed, they are so easily and quickly worked by hand that it seems hardly worth while to arrange and keep in repair mechanical appliances to render them automatic in their working. Further, when cages are to be loaded

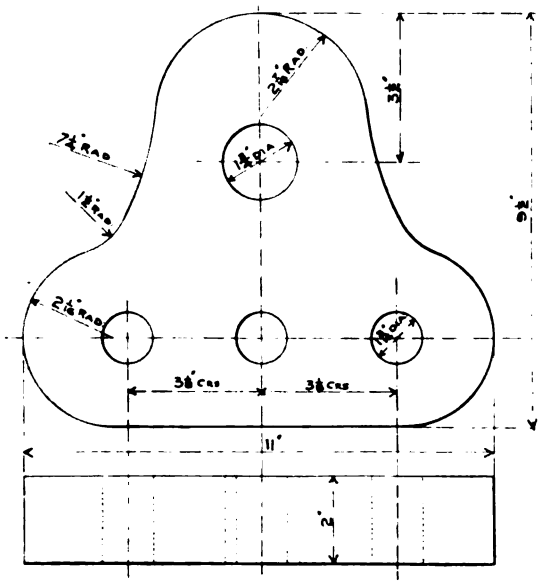

FIGS. 552 AND 553.

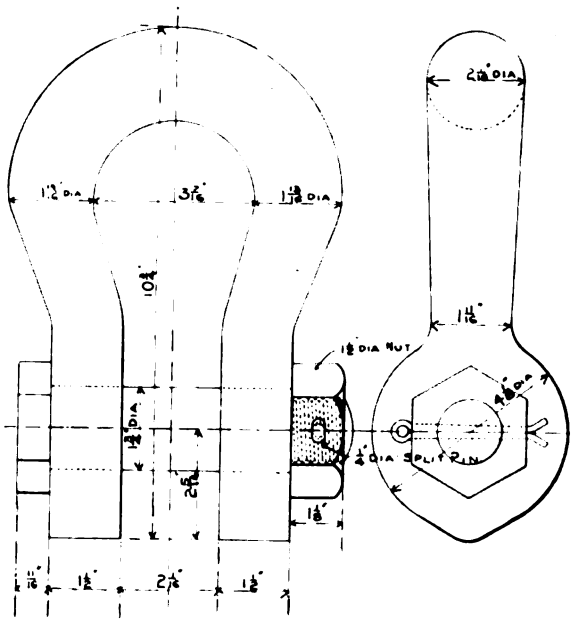

FIGS. 554 AND 555.

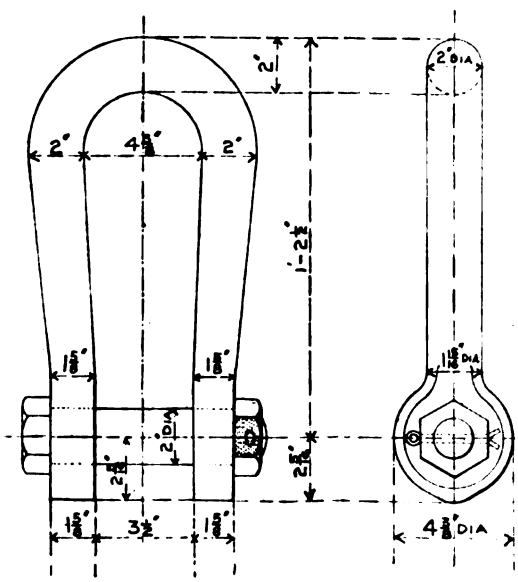

FIGS. 556 AND 557.

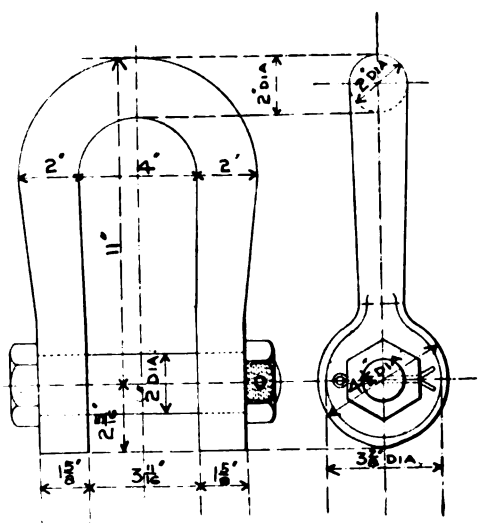

FIGS. 558 AND 559.

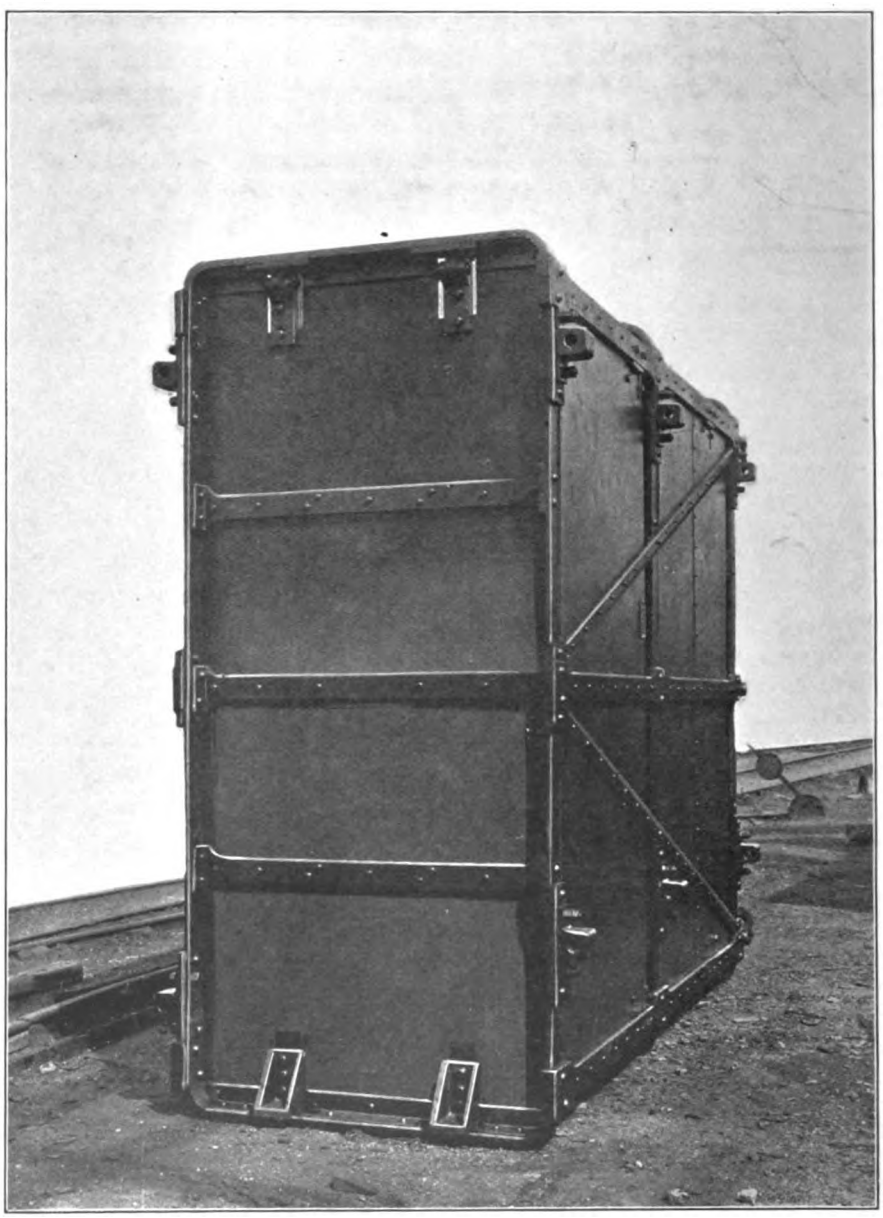

FIG. 560.—CAGE WITH TILTING BOTTOM.

from both sides of the shaft, automatic arrangements are not so easily arranged. A simple arrangement of snecks where the tubs are put in and taken out of the cage in the same direction at both the surface and pit bottom is shown in figs. 568 to 571 (Plate XXXVIII.) At the end where the tub enters the cage the sneck is hinged so as to move in the same direction as the tub (figs. 568 and 569), a knuckle or stop preventing it moving outwards. At the other end the sneck consists of two pivoted bars connected together above the cage hoop by a pair of links as shown in figs. 570 and

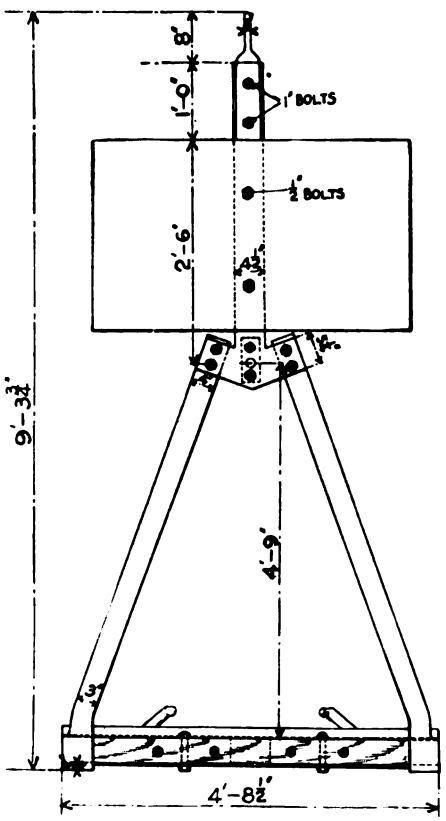

FIG. 561.

(*See* page 276.)

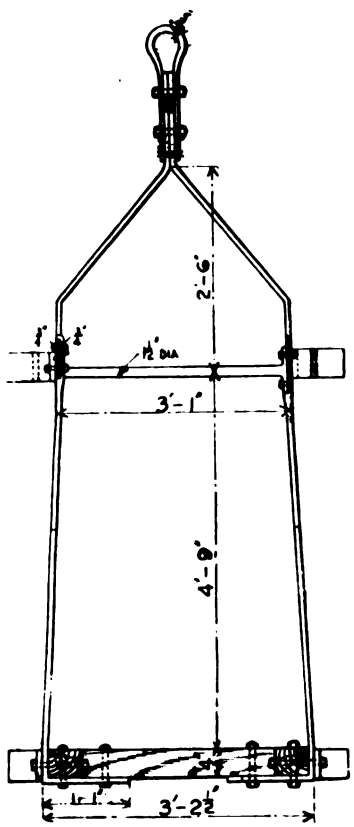

FIG. 562.

571; these bars are easily and quickly moved to one side, as shown by the dotted lines, by the banksman to release the tub.

Another arrangement fixed to the cage bottom is shown in figs. 572 and 573, which is worked by the foot. The catches may be arranged to catch the body of the tub or the axles; as shown, they are arranged for the latter. A rod revolving in bearings at each end of the cage is fitted with levers and counterweights, so

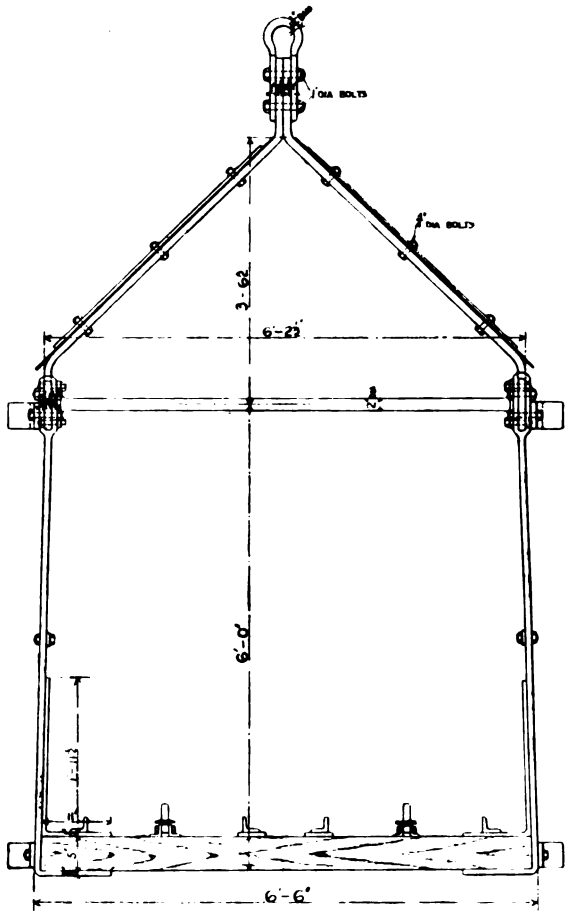

FIG. 564.

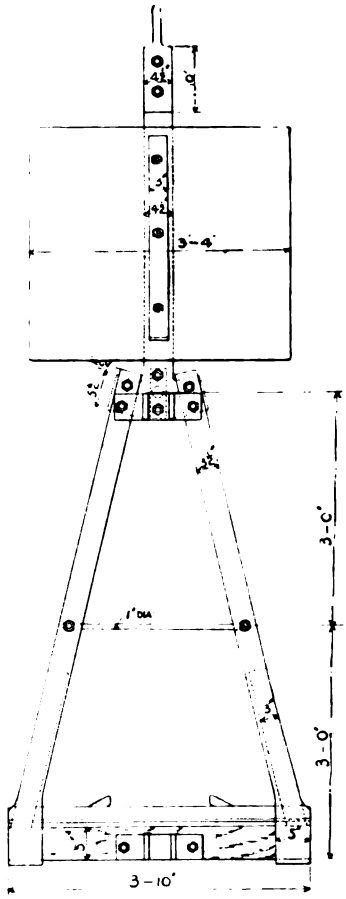

FIG. 565.

FIG. 566.

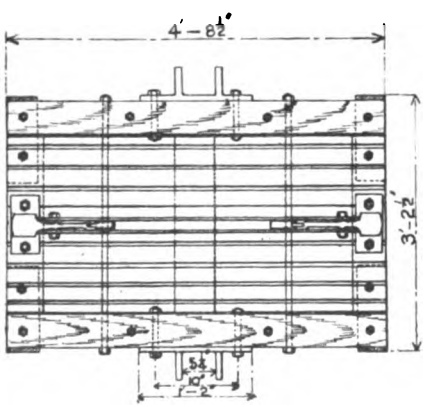

FIG. 563.

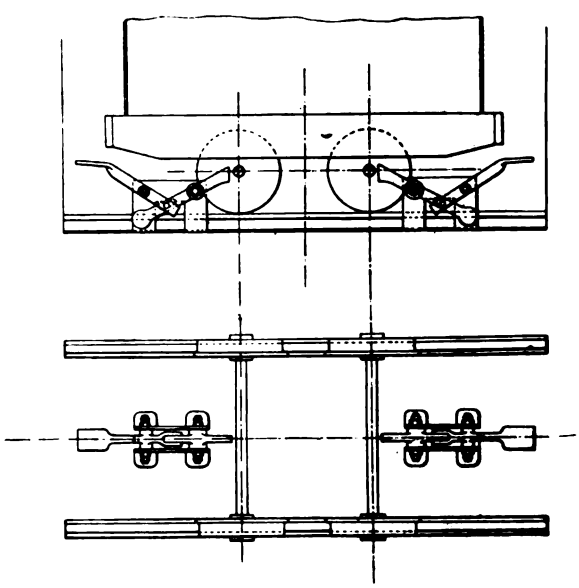

FIG. 567.

(*See* page 276.)

PLATE XXXVIII.

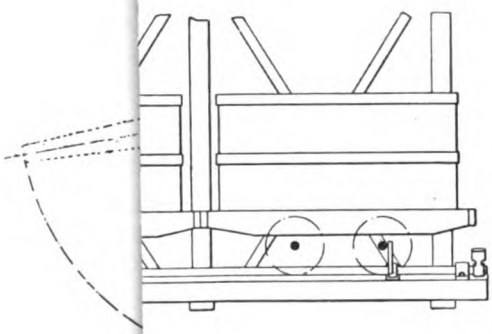

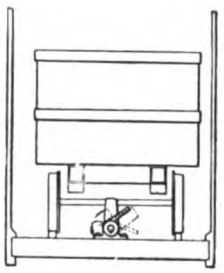

FIG. 573.

FIG. 574.

FIG. 575.

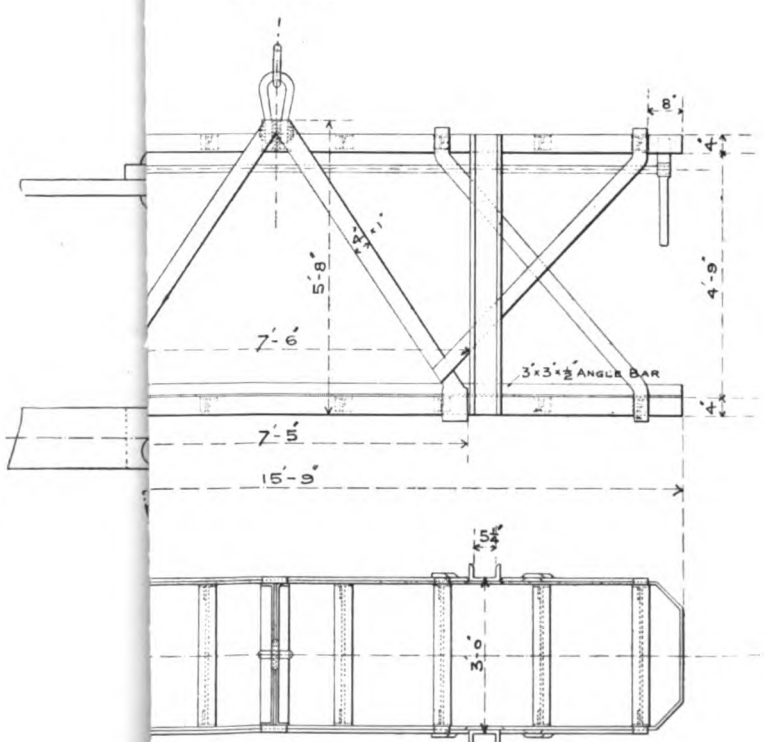

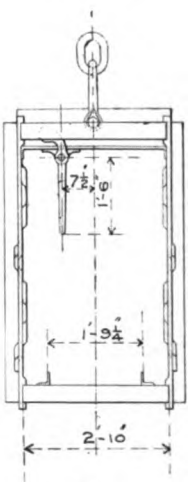

FIG. 576.

FIG. 580.

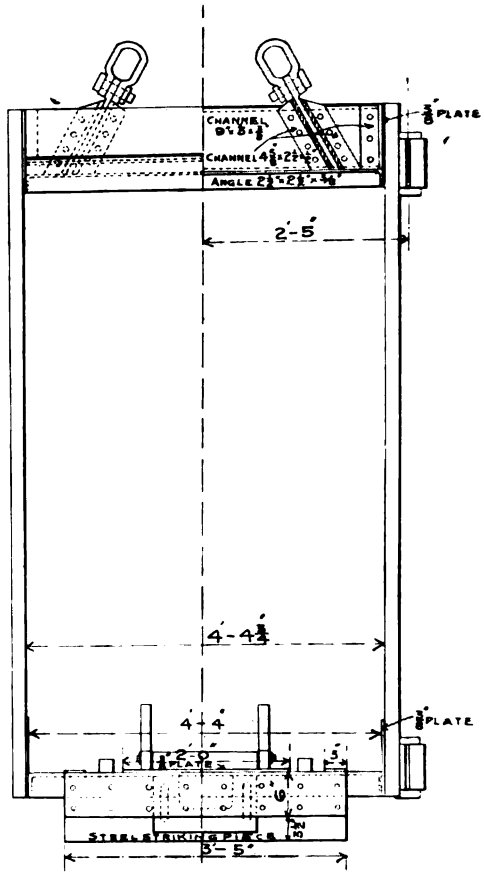

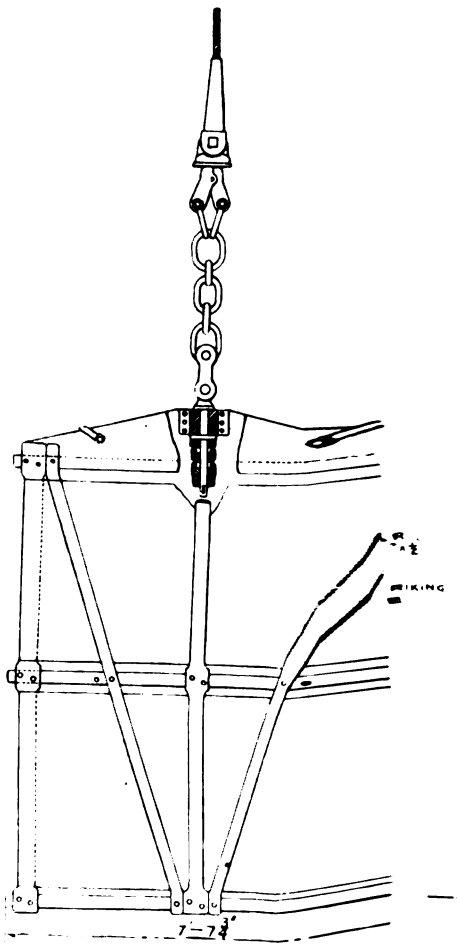

FIG. 577.

CAGE WITH C

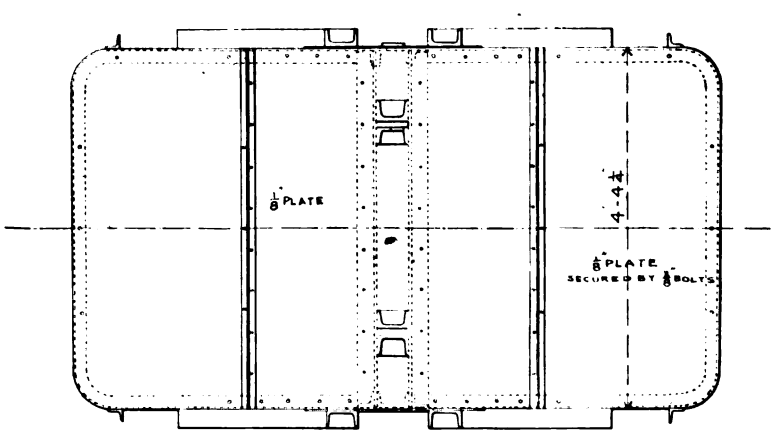

FIG. 582.

LANBRADACH COLLIERY.

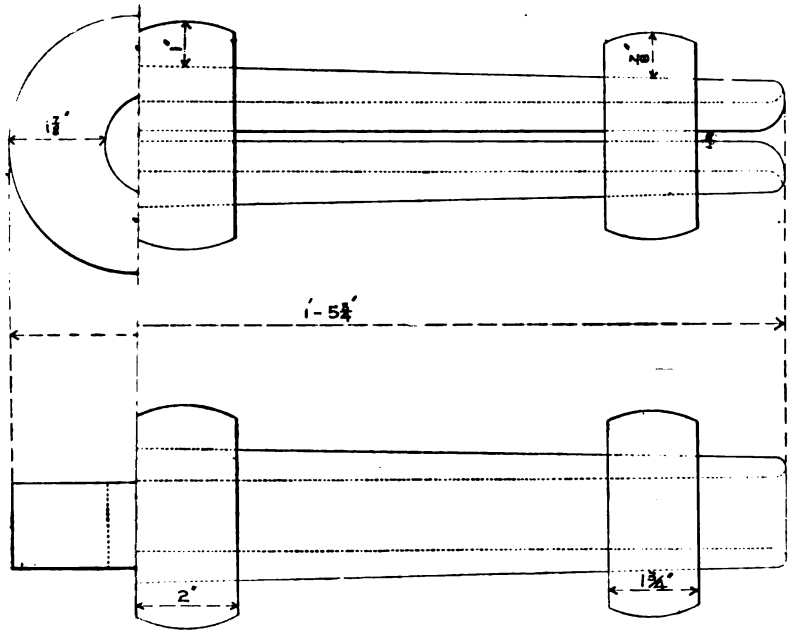

E SOCKET.

FIG. 590. 591.

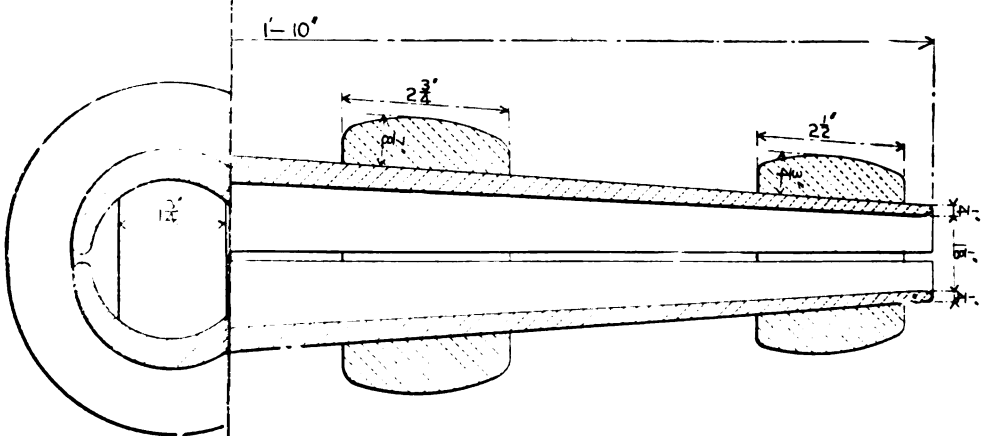

SECTION A.B

DETAIL OF CONE

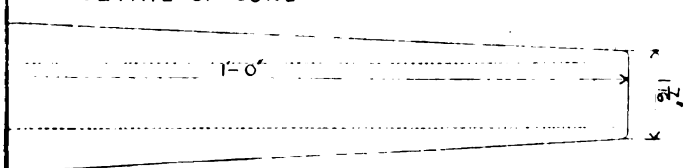

FIG. 592

E SOCKET.

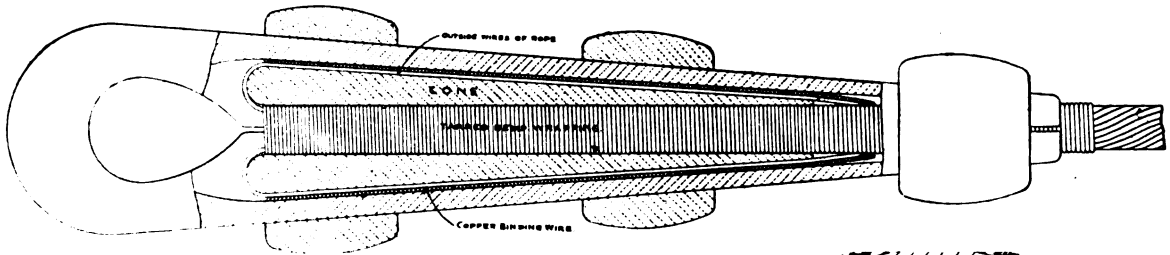

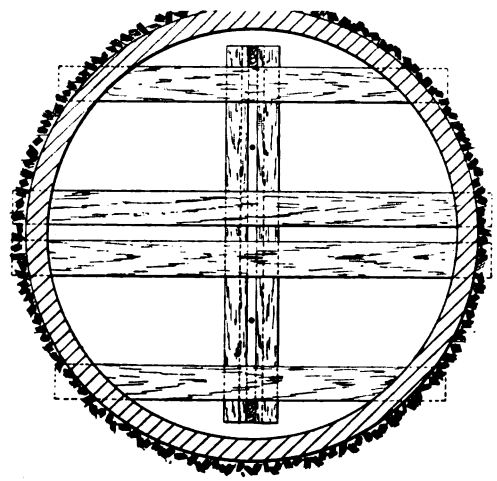

FIG. 596.

FIGS. 594, 595 AND 596.—ARRANGEMENT TO GUIDE BALANCE ROPE.

arranged as to remain in either the "on" or "off" position by the action of gravity. Sometimes the counterweight is part of the revolving rod, which then consists of a forging or flat bar with the ends pivoted eccentrically. Other arrangements are bows enclosing the end of the tub, and others again are axle catches worked by a hand lever fitted to the side of the cage.

Figs. 574, 575 and 576 show three views of a single-deck cage designed to carry four tubs in line, and suitable for a hoist, or drop cage, in connection with simultaneous decking of cages from two platforms. It is arranged to run in wood guides, the cage shoes consisting of channel bars, which materially assist in strengthening and stiffening the cage. The snecks are arranged to be worked by hand, but in cages of this description it is a simple matter to arrange the snecks to be worked automatically, especially those fitted to the cage bottom to catch the axles.

Another cage, designed by Mr. W. C. Blackett, is similar in construction to the one shown in figs. 546 and 547, but the method of attachment to the rope is different. As will be seen from figs. 577 and 578, the ordinary bridle chains are dispensed with, though shackles are provided in the side plates to enable these to be fixed if necessary. Two side plates are riveted on to the inside of the top hoop, triangular in shape, between which is fixed a cross-bar. Through the centre of this cross-bar passes a single-eyed bolt, which is provided with a buffer spring, consisting of iron cups and indiarubber rings, which serve to lessen the shock at the lift of the load. Between the single-eyed bolt and the Walker safety hook are such shackles and links as may be necessary for adjustment. The rope socket is a hollow cone, made from a Low Moor iron forging. Into this hollow cone the ends of the wires are carefully and evenly spread out, and then fixed in their position by running in good white metal. The end of the rope is then practically a solid cone which cannot be drawn out.

The method of capping is thus described by Mr. Blackett: The rope-end having been inserted through the small end of the socket and tightly clammed, about one foot of the rope (next to the part which is to be subsequently spread out), is very carefully wrapped with copper wire, and the rope end is then drawn back so that the loose wire ends are within the cone in the position that they are intended to occupy. A steel point is driven into the centre of the rope to effect the primary spreading of the wires. This point is then withdrawn, and a larger steel-point inserted, which spreads the wire still further. This is in turn removed, and its place is taken by a larger steel point, first alone and again with a funnel around it. The funnel is driven as far as possible and its threader removed, leaving the wires spread out to their fullest extent by the funnel alone, and then they are carefully wiped as clean as possible. The white metal is then run down through

the funnel, so that the innermost end of the rope may be reached, when the funnel is withdrawn, the white metal run in further to fill the whole socket, and so complete the operation. To re-socket the rope the white metal has to be melted out.

Another cage, shown in figs. 579 to 582, (Plate XXXIX.) from drawings kindly supplied by Prof. W. Galloway, and designed by him for the No. 1 pit, Llanbradach Colliery, is a good example of a cage constructed from rolled steel sections. It is suspended by two short chains and shackles secured to cross-channel bars at the centre of the cage. The cage runs in rope guides fitted to one side only, and is provided with four guide shoes. The vertical side channel bars resist bending better than do ordinary flat bar hangers, but in this case the weak point is that everything depends upon the rivets. The cage is constructed to carry one tub, 7 ft. long and 4 ft. wide inside, having a capacity of 2 tons, and is held in place by axle catches, one pair of which are arranged to be automatically depressed when the cage is lowered on to the keps, by means of a pair of light auxiliary keps. These keps raise the outer end of the catches by means of a plate, which passes through the floor of the cage, and shown on the left, just inside the steel striking piece, which supports the cage on the main keps, which are Strauss's patent. By means of a suitable arrangement of levers, the axle of the full tub, after passing out of the cage, strikes a lever in the centre of the way and draws back the auxiliary keps, thus releasing the plate supporting the catches, which at once fall and prevent the empty tub running through the cage.

Another cage, manufactured by Mr. R. Hudson, is shown in fig. 583. As will be seen, the cage is fitted with shoes for running in wood guides, the middle hoop being provided with safety grippers to prevent the cage falling in the event of the winding rope breaking. During ordinary working, these grippers, which are pivoted eccentrically, are held off by a pair of light chains, which would become slack in the event of a broken rope, thereby allowing the grippers to be pulled down and seize on the wood guide, by a pair of strong helical springs. The bridle chains are provided with screws for adjusting them equally.

The use of safety appliances for preventing the cage falling, however, in the event of a broken rope, whilst compulsory in some countries, has never been appreciated in this country. Innumerable appliances have been brought forward, but all, more or less, are unreliable in their working, and in practically all cases where they have been tried they have eventually been discarded. With wire-rope guides such appliances are practically inapplicable, as it is difficult to conceive any simple contrivance which would be sufficiently powerful to grip the guide ropes to securely arrest a heavy and quickly-falling cage ; and further, there is always the question as to whether the guide ropes would withstand the extra strain thus

FIG. 583.
CAGE WITH SAFETY GRIPPER.

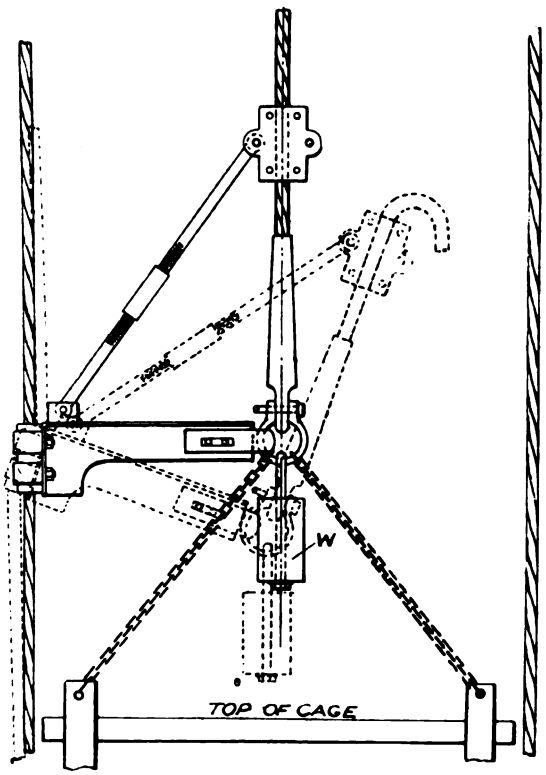

FIG. 584.

suddenly thrown upon them. It must be remembered that a heavy load is always upon a guide rope, and that in time considerable wear takes place, so that the ratio of the weight actually upon the rope, to its breaking strain, decreases; further, they cannot be applied where the weight upon the guide rope is applied by means of a dead weight over a pulley at the top on the headgear—not a good arrangement, for several reasons. Mr. Hanley has invented an arrangement, shown in fig. 584, which would appear to get over the difficulty of not gripping the guide rope. This, as will be seen, consists of a shoe—embracing the guide rope—attached to an arm which is secured at its outer end to the rope socket or shackle, and at its inner end to a clamp on the rope socket by means of a tension screw. In the case of a broken rope, therefore, the cage would be supported by the arm or lever, which

FIG. 585. FIG. 586. FIG. 587.

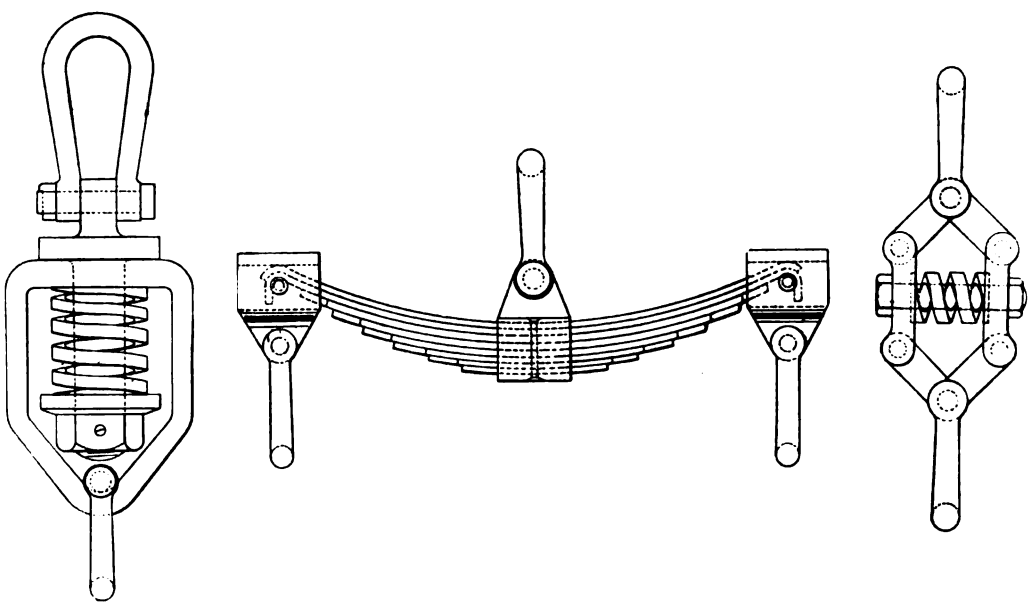

FIGS. 585, 586, AND 587.—TYPES OF SPRINGS USED BETWEEN WINDING ROPE AND CAGE.

would assume the position as shown by the dotted lines, the weight W being for the purpose of quickly throwing the arm into an unstable equilibrium. Whilst in the case of an accident to the rope, the apparatus would no doubt grip the guide ropes, what the actual effect would be is impossible to say, but in all probability if the guide ropes did not break, they would be kinked so badly as to render their renewal necessary. Even with strong wood guides, where such appliances have been provided, the cage has not only *not* been prevented from falling, but the guides and shaft have been so damaged as to take considerable time to effect their

repair. Further, there is always the danger with quick winding that the safety catches may come into action when not wanted.

Generally, then, it would seem that the best safeguard is to ensure that the rope will not break, by

(1) Employing none but the best quality of rope suitable for the load and diameter of the drum.

(2) Daily careful examination.

(3) Guarding against corrosion by acidulated water and damp atmosphere by the use of a good rope oil or grease.

(4) Guarding against repeated small shocks.

(5) Limiting the life of the rope to a certain period.

The choice of a suitable rope has already been discussed, and more attention should be given to this point than is usually the case. The damaging effect of repeated shocks has also been pointed out, and to reduce the effect of these, springs have been inserted between the cage and rope socket, or in other cases underneath the pulleys. These consist of indiarubber or steel helical or plate springs. Indiarubber has the disadvantage that it soon hardens, and when placed under the pulleys soon becomes practically useless. Figs. 568 and 569 show one application of an indiarubber buffer to a cage, whilst figs. 585, 586, and 587 show different types of steel springs between the cage and rope. Another application of helical springs is to place them under the cages at the pit bottom, which not only slightly assist the rope in starting the load, but materially lessen the shock to the cage as it is dropped upon them. The objection to springs, however, is that the elasticity may interfere with the changing of the tubs, unless keps are provided at both top and bottom of the pit to rest the cage upon. Otherwise properly designed springs are a distinct advantage in quick winding. With springs under the cage at the pit bottom, they must be so arranged that when compressed with the weight of the *empty cage and tubs* the rails will just be at their proper level, so that when the full tubs are run in they will be a little below.

The best form of socket or capping for attachment to the rope is a question which has given rise to considerable discussion. Flat ropes present little or no difficulty in this respect, as all that is required is to bend the rope over a pear-shaped block of cast iron of suitable size—the larger the rounded part the better—and secure the loose end by a sufficient number of separate clamps, or a single pair of long clamps, one on each side, which embrace both the rope and block. The pear-shaped block is provided with a hole to take the shackle bolt.

With a round rope, however, the problem is not so easily disposed of. What is wanted is a fastening which shall hold the rope with a force about equal to its breaking strain, yet at the same time one that may be easily fixed, and will not injure the rope in its application or working. It is not necessary that the capping

should equal the breaking strain of the rope, as it is evident the strain near the cap cannot be equal to that at the drum. The wires composing the rope, however, suffer most from the strain at the socket, as elasticity ends and rigidity begins. Moreover, in socketing, the wires may be so damaged or insecurely fixed that the full breaking strain of the rope cannot possibly be attained. A hollow pear-shaped block or thimble and clamps is not so suitable for a round rope on account of the great difficulty of bending a hard steel rope over a radius of comparatively small diameter without injuring it. A flat rope is thin in comparison to its width, and is easily bent, and once bent its wide surface allows sufficient friction to be applied by clamps to keep it in place. Accordingly a rope socket—which consists of an iron forging with two semi-circular hollow pieces joined together at one of their ends by a round or rectangular-shaped piece, bent so as to bring the edges of the semi-circular hollow parts together so as to form a hollow cone—is used. The old method of fixing the socket was by wrapping the rope end with tarred hemp, opening out the socket by heating the rectangular part, and after inserting the rope, closing, it was held together by rivets passing through the hollow cone and the rope. As the loads and strains upon the ropes, however, began to increase, this method proved most unsatisfactory. The rivets frequently broke or gave way owing to not having sufficient countersink, and carelessness in driving the punch through the rope, broke many of the wires, thus rendering them useless for lifting, and the general result was that either the rope broke inside the socket, or was withdrawn from it altogether. An improvement on this method is to wrap the rope with copper binding wire to within a few inches of the end, and to open out the wires of the exposed end and turn them back over the binding wire, to form a bunch, which fits into a recess formed in the socket for its reception, as shown in figs. 588 and 589 (Plate XL.). The socket is made to have a slight taper outside, the inside being parallel, and instead of rivets, hoops are tightly driven on to keep the socket closed. Sometimes small set pins are screwed into the hoops to prevent them moving, but such a precaution seems quite unnecessary. The socket shown is designed for a plough steel rope 4 in. in circumference, with a breaking strain of 60 tons. The objection to the socket is that the whole load comes on to that part of the rope within the recess, the parallel part of the socket, which simply grips the rope—more or less according to the care taken in fixing—being of little value for sustaining the weight. Moreover, the wires are so strained—especially if the steel be hard—by the turning-over process that they are materially weakened, and cases have been known where the wires have broken at the point where they are turned over, and the rope has been withdrawn from the socket.

A much better form of rope socket is shown in figs. 590, 591 and 592. In this case the socket is constructed to form a cone, and the rope is enclosed by a pair of semi-circular wedges (fig. 592) which, when together, form a cone of exactly the

same taper as the rope socket. The rope end is served with a wrapping of tarred hemp or copper wire to prevent any of the coils or wires becoming untwisted or displaced for a distance of from where the cone is fitted to a few inches above the top of the rope socket. After fitting the split cone, which should closely grip the rope, and securing with temporary clamps or pieces of strong wire fitted into grooves provided in the split cone for this purpose, the wires comprising the rope are carefully opened out and untwisted, one strand at a time, and each wire is neatly bent over the cone. As the diameter of the cone is varying, the wires will vary in length as the circumference of the cone is covered. They are then bound in with copper wire and inserted in the socket, which is opened for this purpose by heating the eye, after which it is closed again, and the hoops—which, of course, have to be threaded on the rope in their proper order before commencing to socket the rope—are tightly driven on. This is an excellent method of capping a rope, though a tedious one, and one which requires to be carefully carried out. The wires should be carefully distributed over the cone, so many of each strand reaching over the top, where they are tightly bound. Fig. 593 (Plate XLI.) shows a section of the socket and cone when fixed to the rope. The advantages of this type of socket are that the wires are not so unduly strained when bent over the rounded end of the cone as when doubled over on themselves, as in the socket previously described, and it is practically impossible for the rope to be withdrawn from the socket. Instead of the socket and cone being split, as shown, both may equally as well be solid, but in this case the load has to draw the rope tight.

Sometimes, in addition to the hoops, where the method of socketing is as shown in fig. 588, rivets are used, and it is claimed that they can be put in without breaking the wires by carefully threading the point of a steel punch, and that they materially assist in strengthening the capping; and there can be but little doubt that this is so, as before the rope can be withdrawn, the wires must either become untwisted or break in order to get past the rivet. This method, however, cannot be used in capping lock coil ropes, which are usually capped with cone sockets. Generally speaking, the use of rivets is not to be recommended, as it is questionable whether a rope can be capped on this method, however carefully it may be done, so as to nearly equal the strength of the rope; in most cases it will probably be found not to exceed 50 per cent. of this strength, and in many others considerably below this amount.

To render rope capping still more reliable, the sockets are often made solid, and the rope fixed by running in white metal, as previously described in connection with the cage shown in fig. 577, and this method is especially suitable for lock coil ropes. To enhance the security of the white metal, the wires, after being cleaned with paraffin oil, may be dipped in a weak solution of nitric acid to remove all grease and dirt, and afterwards tinned; the inside of the socket, which is bored

out by machinery, being also tinned. Ordinary good white metal may be used, which melts at a low temperature. Mr. Ward, of Bradford Colliery, uses an alloy consisting of lead 60 per cent., tin 30 per cent., antimony 9 per cent., bismuth 1 per cent. The antimony is to increase the hardness, while the bismuth lowers the melting point, and has also the advantage that it slightly expands in cooling.

It can hardly be said, however, that any of these methods of capping are perfectly satisfactory, so much depends upon the care and attention given to the operation; flexion strains are often set up at the top of the socket, where the flexibility ends and rigidity begins; the tension on the wires varies inside the socket; and the rope inside the socket cannot be examined. At some collieries in Germany rope sockets have been dispensed with altogether, and the rope is simply gripped in a special clamp, consisting of a steel tapered bush divided into three parts, and filled with a metal alloy, which is pressed against the rope by an outer inverted conical cylindrical ring. Again, special clamps with pivoted arms—to which the cage chains are secured so that the weight of the cage increases the frictional resistance against slipping—are used, and both systems have the advantages that the rope may be inspected, and are easily removed to another position on the rope; further, there is no bending of the wires or distortion of the strands composing the rope. It would appear, then, that a socket made in halves and truly bored out to fit the rope, and secured by bolts, hoops or specially screwed taper hoops, and long enough to secure sufficient friction to prevent slipping, would be the best form of rope attachment. Such a means would have many advantages over the ordinary methods of capping, inasmuch as it would be easily applied and removed for inspection; the individual wires and strands would not be disturbed, and there should be no difficulty in securing a sufficiently frictional grip as to equal the breaking strength of the rope.

The proportions of sockets vary according to the strength of the rope, but the following may be taken as good practice for plough steel ropes. Taking the unit D as equal to the diameter of the rope, then

Length of socket = 20 to 25 D.
Diameter at top = 1·5 to 2 D.
Diameter at bottom = 2·5 to 3·25 D.
Thickness of shell at top = 0·25 D.
Thickness of shell at bottom = 0·5 D.
Rectangular section forming eye =
    Breadth = 1·25 to 1·75 D.
    Thickness = D to 1·25 D.
    Thickness at bend = 1·25 to 1·75 D.
Length of cone = 12 to 15 D.
Taper of cone = 1 in 12.

For ropes constructed of steel wire with a higher or lower breaking strain the dimensions will be increased or reduced accordingly. For solid sockets run in with white metal, the length may be taken as 15 to 20 D, and instead of being formed to take a shackle bolt, as shown in fig. 539, they may be forged with a double eye to couple directly to the detaching hook, as shown in figs. 577 and 578.

The advantages of balance ropes have previously been discussed. The method of securing these is by sockets, but as they have merely their own weight to support, the sockets need only be of comparatively light construction. They may be suspended from the hangers at the bottom of the cage by bridle chains, or directly to the winding rope by side rods and bridle chains on the outside of the cage. Where cages carry tubs abreast, the usual plan is to suspend the balance from the main rope by a bar passing right through the cage, and between the tubs. An objection to the balance rope being attached to the cage is that a nasty shock is given to the capping every time the cage is put upon the keps; hence the reason for suspending the balance rope directly from the main rope. Where the central bar is in use this is easily done.

The rope at the pit bottom is allowed to simply form a loop. Sometimes a pulley moving in guide bars is provided to guide the rope, but this appears to be quite unnecessary. At Newbattle Colliery the rope hangs loose in the shaft, and forms a simple loop about a cross girder placed at the centre of the half-circle formed by the loop. It rarely, however, swings so much as to touch the girder, though when in motion it twists very slightly.

In order to reduce the swaying motion of the rope, it is often confined in a deep narrow groove, as shown in figs. 594, 595 and 596. As will be seen, two baulks with well-rounded edges are secured at right angles to the cage baulks at the top, and two more at the bottom of the groove. Distance pieces, equal in length to the depth, and in thickness to the width of the groove, are bolted between them at the ends, and to these are secured the battens forming the groove.

Cage chains are often subjected to enormous shocks during ordinary working, and for this reason, as well as to ensure freedom from accident, a high factor of safety is usually allowed. The size of cage chains may be determined from the following formulæ, when

W = safe working load in tons,

D = diameter in inches of iron from which chain is made,

N = number of bridle chains actually supporting the cage,

Then $$D = \sqrt{\frac{W}{3\,N}}$$

and $$W = 3\,N\,D^2$$

The test load may be taken as

$$\text{Test load} = 12\ D^2$$

Very often six bridle chains are fitted to a cage, though the weight is only actually carried by the four corner chains, leaving the middle ones slack, which merely act as safety chains, in which case N would be taken as 4. If, however, the chains are provided with separate adjusting screws, so that an equal tension may be put on all the six chains, then N will be taken as 6. All cage chains should be taken off and annealed at least once in *three* months.

The following table gives the sizes, weight, and strength of chains .—

TABLE OF SHORT-LINK CHAINS.

Diameter of iron.	Length of link outside.	Width of link outside.	Working load as cage chains.	Ordinary safe working load.	Breaking strength.	Weight per fathom.
In.	In.	In.	Tons (1 chain).	Tons.	Tons.	Lb.
¼	1 3/16	7/8	—	·37	1·7	3·5
5/16	1 1/2	1 1/8	—	·56	2·6	5·5
3/8	1 7/8	1 5/16	—	·81	3·9	8·0
7/16	2 1/8	1 9/16	·57	1·12	5·3	10·5
½	2 7/16	1 3/4	·75	1·5	7·0	13·7
9/16	2 3/4	2	·94	1·87	8·9	17
⅝	3 1/16	2 3/16	1·17	2·31	11·0	22
11/16	3 3/8	2 7/16	1·38	2·81	13·4	26
¾	3 11/16	2 5/8	1·68	3·37	16·0	30
13/16	4	2 7/8	1·96	4·0	18·8	36
⅞	4 1/4	3 1/16	2·29	4·56	21·8	42
15/16	4 5/8	3 1/4	2·59	5·25	25·1	49
1	4 13/16	3 1/2	3·00	6·00	28·6	55
1 1/16	5 1/4	3 3/4	3·37	6·75	32·2	60
1⅛	5 1/2	3 15/16	3·78	7·50	36·0	68
1 3/16	5 13/16	4 1/16	4·17	8·25	39·9	76
1¼	6⅛	4 3/8	4·68	9·37	44·1	84
1 5/16	6 7/16	4 5/8	5·14	10·25	48·5	93
1⅜	6 3/4	4 13/16	5·67	11·25	53·0	102
1 7/16	7⅛	5 1/4	6·75	13·5	62·7	120
1½	8	5 11/16	7·92	15·75	73	144
1 9/16	8⅜	6⅛	9·18	18·37	84·3	168
1⅝	9 3/16	6 9/16	10·53	21·0	95·9	196
2	9 13/16	7	12·00	24·0	108·3	220
2⅛	10⅞	7 7/16	13·53	27·0	121·4	248
2¼	11	7⅞	15·18	30·37	135·1	272
2⅜	11⅝	8 5/16	16·92	33·75	149·4	304
2½	12¼	8¾	18·75	37·5	164·4	336

Shackles vary in length and shape according to the requirement of the coupling. The following sketch shows the proportions of the shackle and large link at end of chain, the unit D being the diameter of iron from which the chain is made. The large link, of course, is not always required, but bridle chains are usually provided with a larger link at each end to take the shackle.

It is necessary, in order to facilitate changing the tubs in the cages, that each cage shall simultaneously come to an exact level with the flatsheets at both the top and bottom of the shaft, and means must be provided—where each cage is suspended by a separate rope—for adjustment, owing to the ropes stretching unequally. In the Koepe system, as both cages depend upon one rope only, this is not necessary. With flat ropes wound on reels it is usual to fix strips of oak

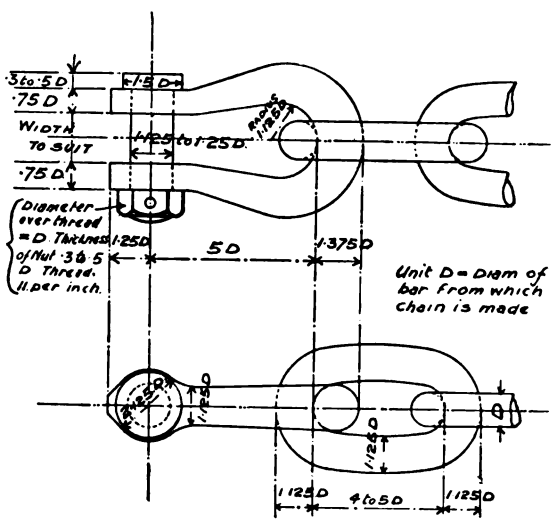
·3 to ·5 D
·75 D
Width to suit
·75 D
Diameter over thread = D Thklness of Nut ·3 to ·5 D Thread. 11 per inch.
1·25 D
5 D
1·375 D
Unit D = Diam of bar from which chain is made
1·25 D
1·25 D
1·25 D
4 to 5 D
1·25 D

PROPORTIONS OF SHACKLES.

packing to the reel to slightly increase its diameter, or insert pieces of hemp rope packing between the last working coil and the dead coils for a like purpose. In both cases the strips should be tapered where the rope leads "on" and "off" to avoid any sudden interruptions to the circular path. With cylindrical drums lagged with wood and round ropes a similar method is employed, by nailing thin pieces of wood termed "saddles" to the lagging, to slightly increase the diameter of the drum. Here again the saddles should be thinned to an edge where the rope leads "on" and "off." As the rope stretches and the number of saddles increases, it becomes necessary to shorten either the rope or the chains by which the cage is suspended. To facilitate the latter a short length of strong chain, termed a "lengthener," is inserted between the detaching hook and cage chains, by means of

two shackles as shown in fig. 546, where the 1½ in. chain is the "lengthener." A few spare chains with a more or less number of links, or with links of different lengths to give different total lengths, is kept on hand, and these "lengtheners" changed from time to time as required; when a new rope is put on, a long "lengthener" would be put on, and as the ropes "comes out," as stretching is termed, saddles would be temporarily put on to take up the extra length by increasing the diameter of the drum until it is convenient to put on a shorter "lengthener," when the saddles are removed. This is a very simple means of adjusting the cages, as the saddles are very quickly applied during coal work with scarcely any appreciable loss of time, and the "lengthener" can be changed in a few minutes when convenient.

In order to take the "twist" out of a new rope, a swivel should take the place of the lengthener when lowering the cage for the first time, and after running in the shaft once or twice taken off again. This is probably a better plan than by unfastening the rope at the pit bottom, and allowing the rope to untwist when free.

Where the drum is not provided with wood lagging, the cages are adjusted by means of screws, one form of which is shown in fig. 597, but is a much slower method than with saddles.

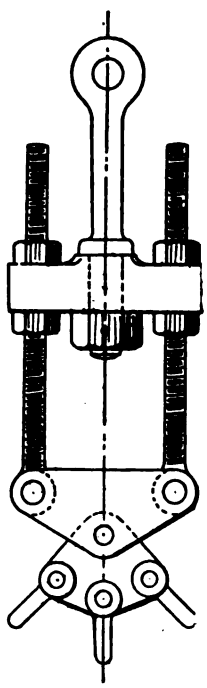

Fig. 597.
Adjusting Screws.

Ordinarily the rope is attached to the drum by bringing the rope end through a hole in the cleading, which should be well rounded, and passing two or three turns round the shaft, and fixing the loose end by a clamp. A few dead turns, from two to four coils, are wrapped round the drum to prevent the rope slipping. It is commonly assumed that little or no tension is upon that part of the rope secured to the shaft, and an old rule stated that with one turn upon the drum a pull of 1 lb. would resist a pull of 9 lb. with two turns, 9 × 9 or 84 lb.; or, if n = the number of turns, p = tension on loose end, and P = load sustained, then

$$P = (9p)^n.$$

This, however, is scarcely true, as with a steel rope upon wood lagging, the co-efficient of 9 is much too high, and still more so with a steel rope upon iron or steel lagging. For the former a co-efficient of 6, and 3 for the latter is much nearer the actual result; but where the rope is absolutely secured, as is the case of a winding rope, the formula does not apply, and in all probability the actual tension on the rope inside the drum in the course of time very nearly approaches that due to the

working load. That this is so is to some extent verified from the fact that though the coils upon the shaft may be slack, and the length of rope from the shaft to the drum may be easily shaken when a new rope is put on, in a very short time this piece of rope becomes very tight. It is well, therefore, to thoroughly secure the rope by giving at least three turns round the drum shaft, and secure the loose end by two or three strong clamps.

It is now considered good practice to frequently re-socket a winding rope by cutting off a few feet from the end of the rope and obtaining the extra length from the dead turns upon the drum. In an ordinary cylindrical drum with both ropes fixed upon the shaft, this entails the moving upon the drum of the rope cut; if both are cut and re-socketed by an equal amount then both ropes should be moved to retain the engine cranks in the best starting position. Cutting the rope also has the advantage of transferring the bending strains upon the rope due to the load to another part of the rope. A rope usually suffers most at the point where it commences to wind upon the drum; though at other times they fail at a point near the socket, which latter no doubt is due to constant shocks hardening the steel; the shock affects the rope at this end more than at the drum end, as the elasticity of the rope is continued in the dead turns upon the drum, whereas at the other end the rope is rigidly held by the socket.

To facilitate shortening a rope by cutting a few feet off or otherwise altering the height of the lift, it is customary abroad to use a separate drum for each rope. One of the drums only is keyed to the shaft, whilst the other is loose and secured by means of bolts to a rosette or clutch inside the drum, which is keyed to the shaft, and provided with slots or holes on its circumference, corresponding with holes in the drum sides; thus, by removing the bolts, the drum may be moved forwards or backwards to let out or take up rope as may be required, and the bolts passed through another set of holes in the rosette. By loosening the drum and holding it by the brake, the fixed drum may be moved for a like purpose by the engine. Thus rope adjustments are easily carried out.

Another arrangement for securing and easily adjusting the rope is shown in figs. 598 and 599 (Plate XLII), which is from a drawing of the drum at No. 1 pit, Llanbradach, kindly supplied by Professor Galloway. As will be seen, a small auxiliary drum is fitted to the boss of the main drum, which is of the built-up type. The rope from the main drum passes through a hole specially formed in the cleading, and is coiled round the small auxiliary drum, the outer coil being held in place by clamps. Between the small drum and the cleading, is a large clamp secured to one of the drum arms, and in this the rope is clamped. The small drum is also fixed in its position by four clamps to one of the arms. When it is required

therefore to let out extra rope after cutting a piece off, it is only necessary to loosen the clamps, when the rope may be paid out.

To facilitate the cages being placed quickly on a level with the flatsheets, keps, fallers, props or shuts, as they are variously termed, are provided, upon which the cage rests whilst the tubs are being changed. Ordinary keps, as shown in figs. 600 and 601, consist of arms keyed to a weighbar working in bearings secured to transverse cross beams in front of the ends of the cages. They are arranged, by levers and balance weights, to lean towards the shaft, so that when the cage ascends, it thrusts them outwards, but immediately fall back so soon as the cage has been drawn up far enough, and when again lowered it rests upon them. Each weighbar is coupled together by connecting rods and levers so that the keps may be

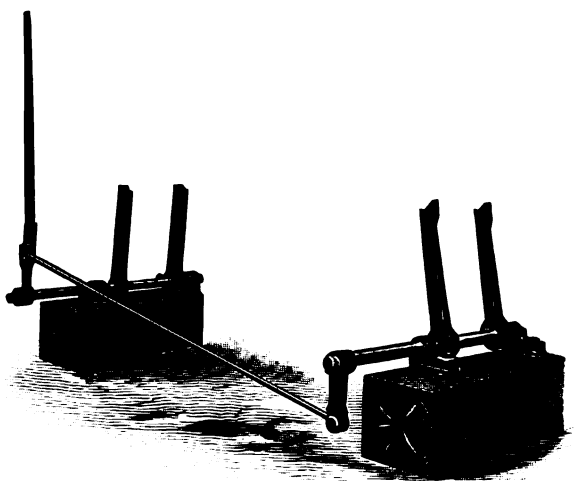

FIG. 602.—CAGE KEPS.

held open to allow the cage to descend. Figs. 600 and 601 show an arrangement of keps, which are kept open by a foot lever; otherwise they are arranged to be worked by hand levers. A very simple arrangement as manufactured by Mr. Hudson is shown in fig. 602.

The objections to keps of this description are that it is necessary to first lift the cage clear, when the banksman withdraws them and signals to the engineman, who reverses his engine and lowers the cage. On the cage again coming to bank the engine is to reverse to lower the cage upon the keps, then reverse again to clear, and still again to reverse to lower the cage down the shaft. With a multi-decked cage, all these reversals are to be effected for each deck, entailing a considerable amount of labour by the engineman, and the consumption of steam. What is probably worse is the effect of the shocks caused by all these reversals upon the

rope, especially if the engineman—as many do in quick winding—work with slack chains. These objections, and especially the latter, have in some cases been so serious, that it has been proposed to dispense with keps altogether; but it is impossible for an engineman to land the cages as quickly without them as with them, so that any proposal to dispense with their use must be considered with regard to its effect upon the output. Keps have been designed therefore to enable them to be withdrawn clear of the cages without having to first raise the latter. Ordinary keps may easily be arranged with sliding carriages and levers, to allow the cage to descend until its weight is upon the winding rope when a further movement of the lever draws back the keps clear of the cage. Another way is to mount the keps upon eccentrics, in such a way that revolving the weighbar effects a like purpose.

Several Continental collieries have adopted hydraulic keps, but owing to their complicated construction and difficulty of keeping them in working order, and to the fact that the same means can be attained by simple levers and sliding blocks, hydraulic keps are not to be recommended, and need not be discussed here.

Figs. 603 and 604 show a general arrangement of Haniel und Lueg's patent keps as supplied by Messrs. W. E. Kochs and Co. Here four cast iron blocks pivoted loosely to weighbars mounted in bearings fixed to the crossbeams support the cage. On each side of the block a lever is keyed to the weighbars, both of which are connected by a pin, passing through a slot in the block. On the outer edge of the weighbars are keyed the levers for moving the blocks. In the position shown, which is that for supporting the cage, the levers on each side of the block are locked by the hand lever and quadrant in a horizontal line so as to resist the thrust, exerted by the weight of the cage tending to push back the block. At the same time the slot is long enough below the pin connecting the levers to allow the blocks to be raised by the ascending cage, which, when cleared by the cage, drop into the position shown for supporting it. The block is pivoted to the weighbar by a slotted hole, which allows it to be moved in a horizontal direction, but prevents any vertical movement, except the turning movement necessary to clear the ascending cage. When the tubs are changed and the cage is ready to be lowered, the hand lever is pulled over, which causes the double levers and pin working in the slot to turn in a circular direction upwards and backwards so as to draw the blocks—which slide upon the bedplate—away from the cage. Special blocks with inclined faces are fitted to the cage hoops, the inclined faces agreeing with those of the keps, so that the cage acts as a wedge tending to push them backwards, and the weight of the cage upon the keps thus assists in their displacement when ready to be lowered. After the cage descends the hand lever is put back and locked by the bolt in the quadrant, which movement returns the blocks to the position for again supporting the cage.

FIG. 603.

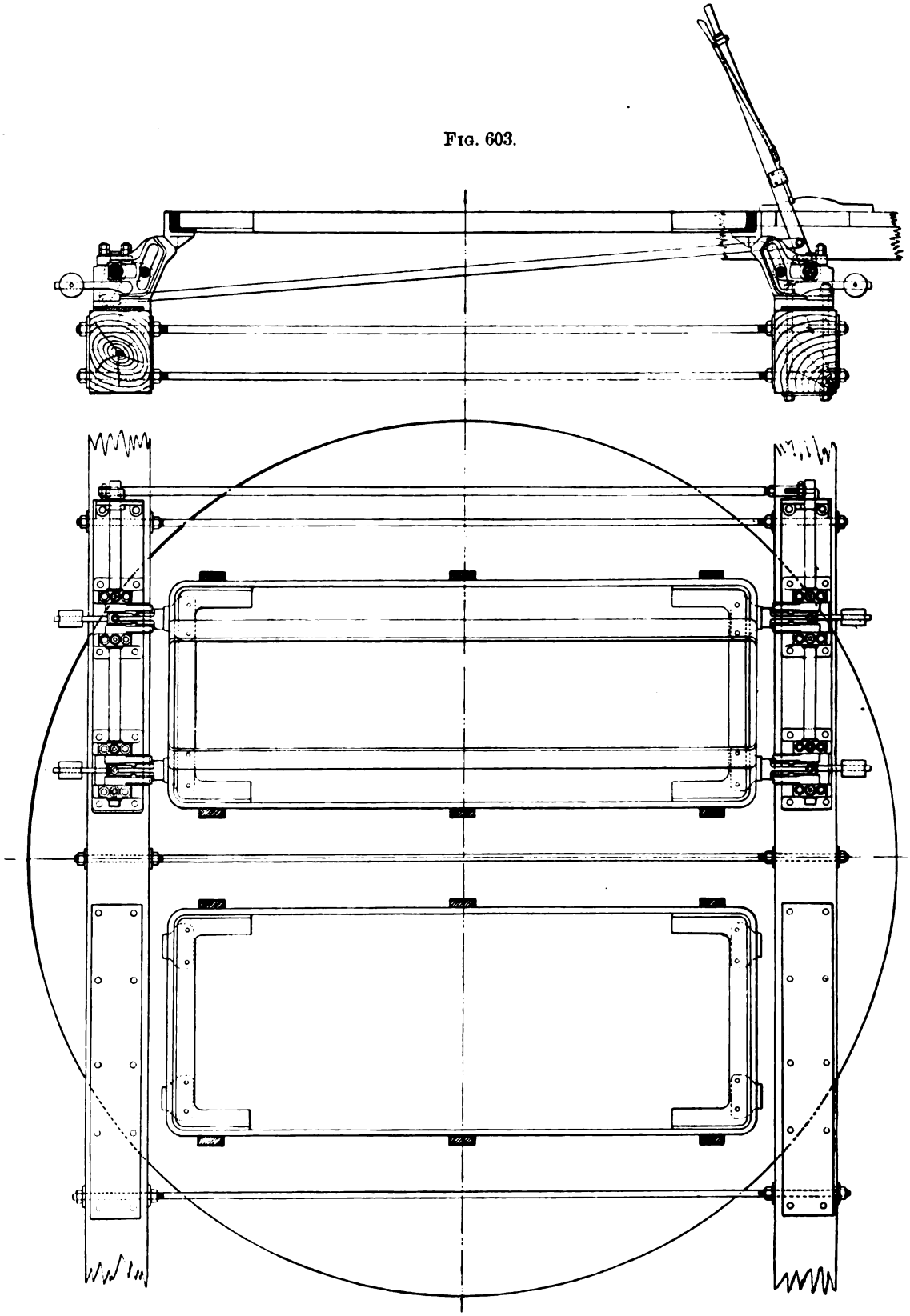

FIG. 604.

FIGS. 603 AND 604.—HANIEL UND LUEG'S PATENT KEPS.

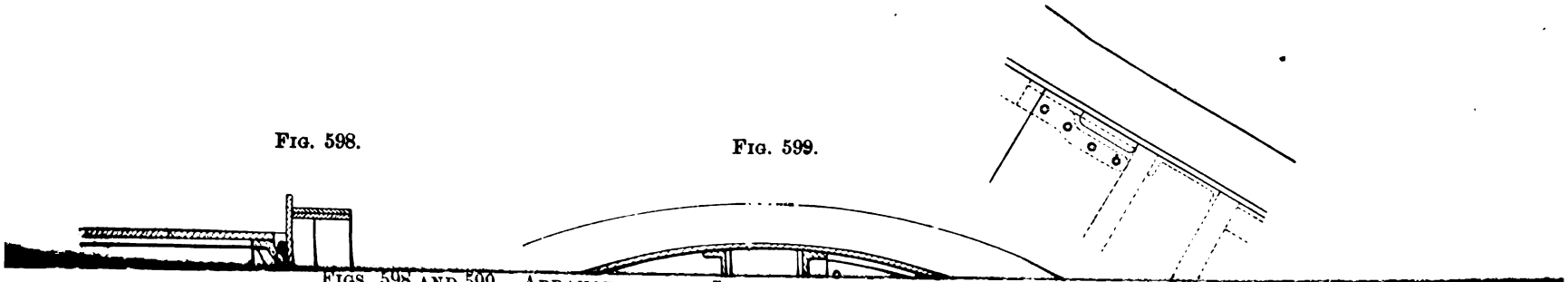

Fig. 598. Fig. 599.

Figs. 598 and 599.—Arrangement of Internal Drum for Adjusting Winding Rope.

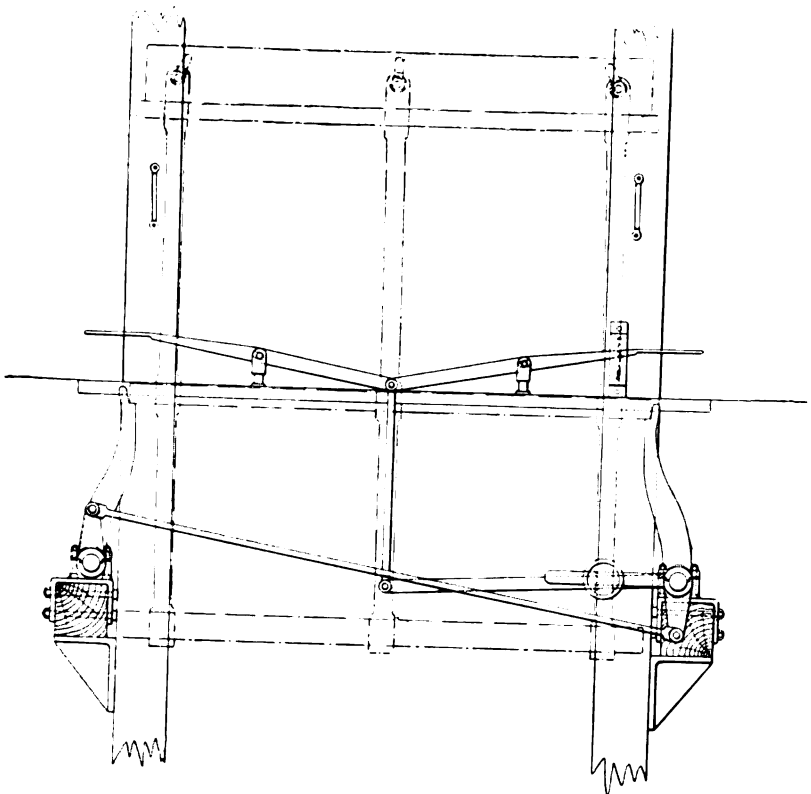

Fig. 600.

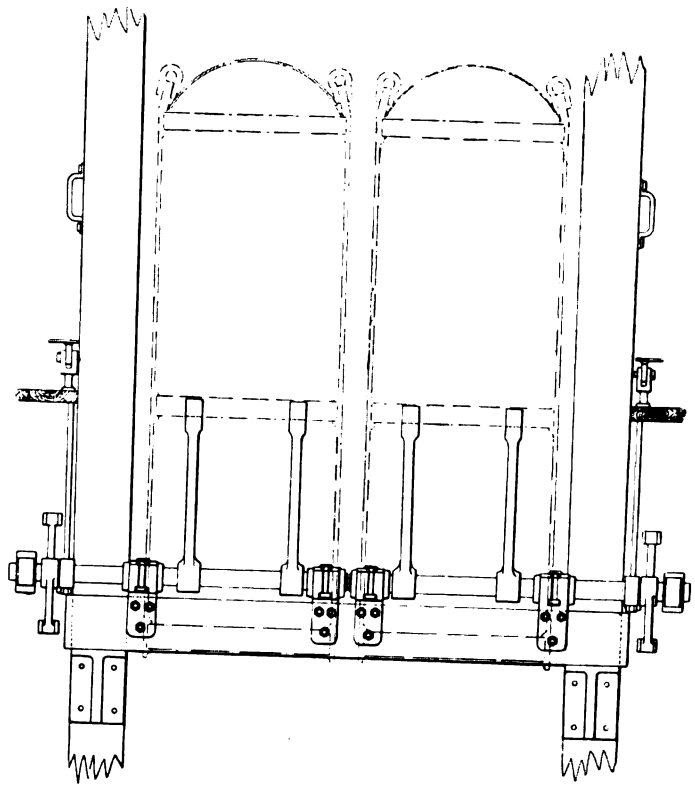

Fig. 601.

Figs. 600 and 601.—Ordinary Cage Keps Worked by Foot Lever.

PLATE XLII.—*See pages 293-4.*

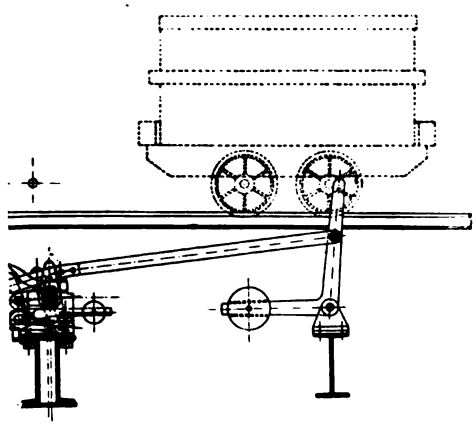

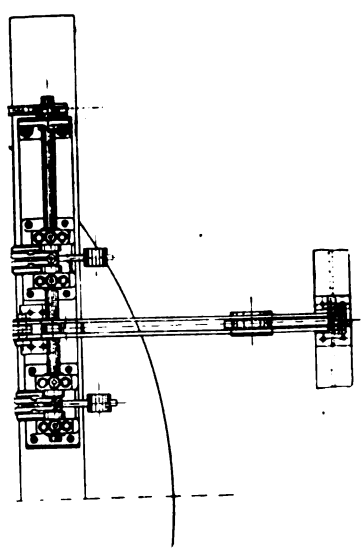

E TUB STOPPERS.

PLATE XLIV.

FIG. 614.

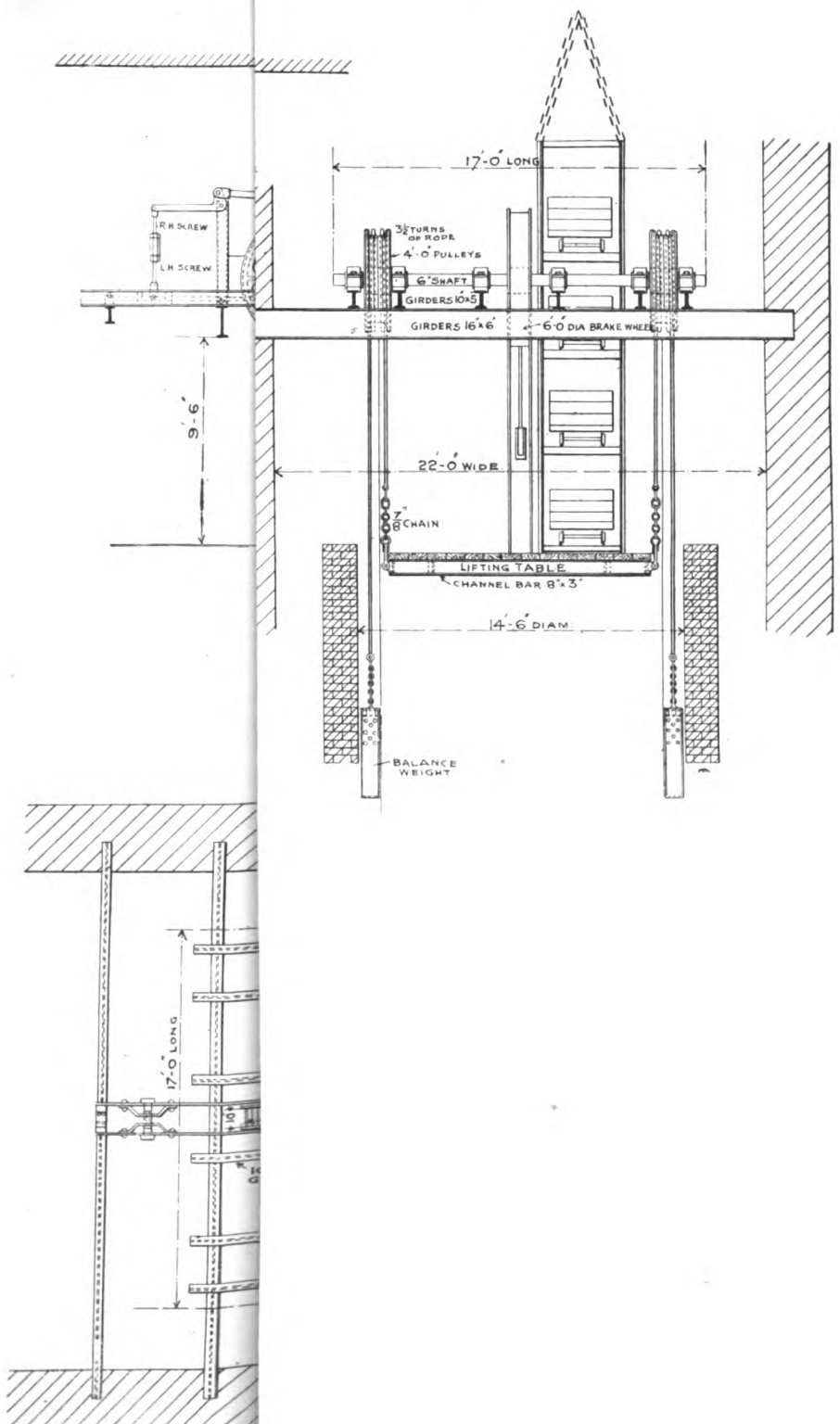

FIGS. RIDING AND SILKSTONE COLLIERIES.

There are other types of keps, all worked on the same principle as the above, and designed for the same object. Another arrangement—that of Beien's—is shown in figs. 605, 606 and 607. This consists of a kep block working in a special casting, so arranged that on moving the short lever, keyed to the same shaft as the hand lever, the pin in the end of the former working in the slot in the block, draws back the latter from under the cage. Fig. 605 shows the block in position with the cage resting upon it; fig. 606 shows the cage lifting the block when ascending; and fig. 607 shows the block drawn back to clear the cage for its descent.

Figs. 608 and 609 show an arrangement of automatic decking in connection with Haniel und Lueg's keps. As will be seen, the cage bottom is hinged, so that when it rests upon the keps it tilts and allows the tubs to run off. To effect this, a small auxiliary kep tilts the front end of the forward axle catches and releases the tubs. As the empty tubs pass into the cage, the axles depress the back catches,

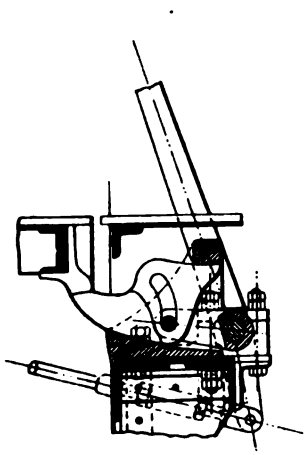

FIG. 605.

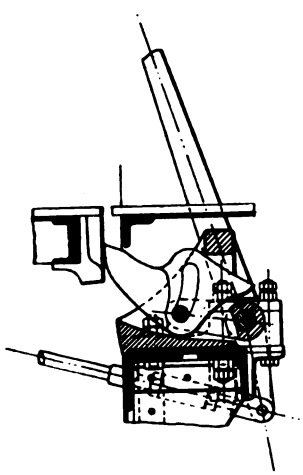

FIG. 606.

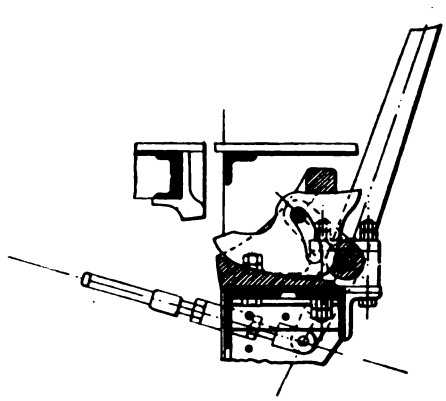

FIG. 607.

BEIEN'S PATENT KEPS.

which lift again when passed over and prevent the tubs returning. At a distance in front of the cage is a small lever in the middle of the roadway, which is moved by the axle of the first full tub, and which displaces the small auxiliary kep, thus releasing the front end of the cage axle catch, which at the proper moment rises to prevent the empty tubs running through the cage. To prevent the empty tubs running into the shaft another stopper is provided, as shown on the left, which is worked by a hand lever placed conveniently to the hand of the banksman. This stopper, which is known as McBean and Eaton's patent, and manufactured by Messrs. Hadfield's Steel Foundry Company Limited, is shown in figs. 610, 611 and 612. As will be seen, this consists of a pair of star wheels revolving upon a shaft

Fig. 610.

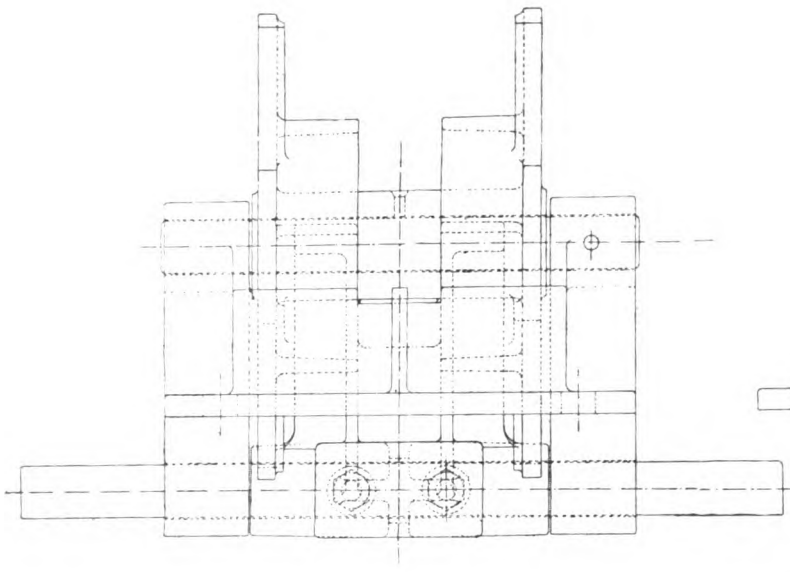

Fig. 611.

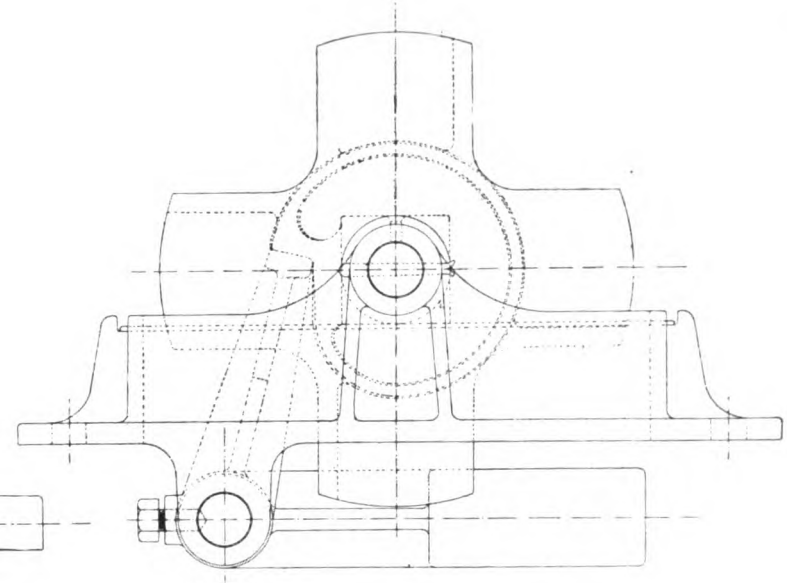

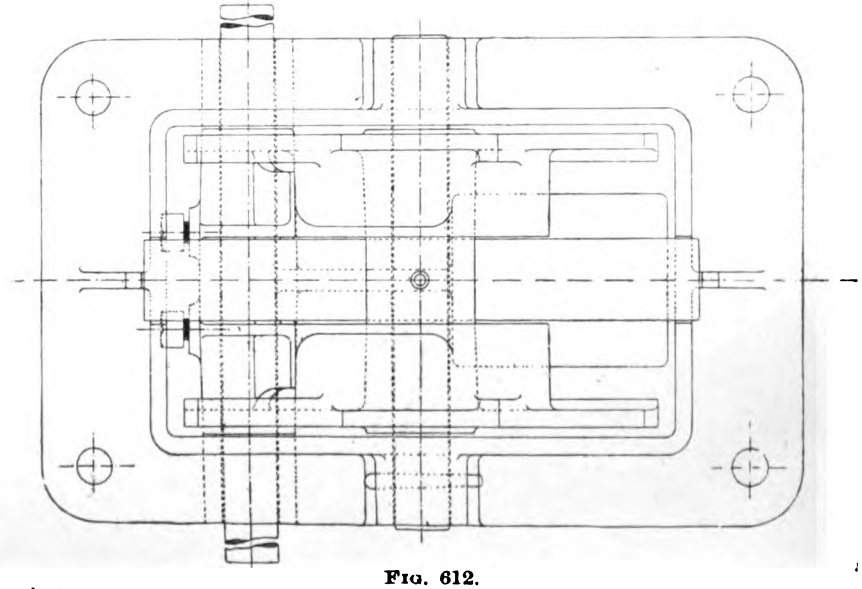

Fig. 612.

McBean and Eaton's Patent Tub Controller.

fixed in bearings forming part of the frame which is secured to the floor. Another pair of bearings on the underside of this frame carries a shaft to which is keyed a pair of short stop levers, with a balance-weight lever between them. The shaft is continued on either side to allow of a hand lever being fixed to operate the short stop levers. Each star wheel is provided with a notch which engages with the stop levers as shown in fig. 608, and, consequently, a tub passing from right to left would be stopped by its axle against the star wheels. On the hand lever, however, being moved over to the left, it withdraws the short stop levers, and freeing the star wheel, allows the tub to pass over. As shown, two tubs (or four axles) would pass over the controller before the short stop lever—by means of the balance-weight—would again engage in the notch, and it is easily seen that if two notches be provided only one tub will be allowed to pass over with each movement of the hand lever.

With simple cylindrical drums there is no difficulty in simultaneously changing the decks of multi-decked cages at both the top and bottom of the pit with the engine, but with conical drums, owing to the difference in the diameters, this is not so easy, and if the decks are to be changed by the engine, considerable time is occupied, as only one cage can be decked at a time. To facilitate the work of decking the cage at the pit bottom, it is supported upon a table suspended by ropes and balance weights, which is lowered by means of a brake wheel into the sump until each deck is on a level with the flatsheets, thus enabling the tubs in the cage at the pit bottom to be changed quite independently of the winding engineman, who has simply to change the decks of the cage at the surface.

Such an arrangement is employed at the West Riding and Silkstone Collieries, and is shown in figs. 613, 614, and 615, from drawings kindly prepared for this work by Mr. W. E. Garforth. As will be seen, a table consisting of a wood floor fixed to a channel bar frame, and large enough to take both cages, is suspended by a rope on each side of the shaft, from pulleys carried upon steel girders. The two pulleys, one on each side of the table, run loose upon a short shaft, while the scroll pulleys at the back are keyed to a long shaft, in the centre of which is keyed a brake wheel 6 ft. in diameter. The rope from the table passes over the inside pulley, then is wrapped three and a-half times round the scroll pulley, and returns to the outside loose pulley, over which it passes, and is secured to a balance weight working in guides in the sump. The brake wheel is fitted with a powerful brake, consisting of two brake posts coupled together through a short bell crank lever, which is connected to a long double lever by an adjusting screw. The long double lever, which is hinged to a cross girder behind the brake wheel, is coupled to a short hand lever placed in a convenient position for the onsetter. The cage descends and rests upon the table, when the tubs are changed in the bottom deck; the onsetter

then releases the brake, and lowers the table and cage to the next deck, and so on until all the decks have been changed. When the cage is lifted by the engine, the table follows it up, and by making the balance weights heavy enough to nearly approach the total weight of the cage, tubs, and table, they will be of considerable assistance to the engine when starting the load, and, in fact, this is an important feature of the arrangement. In this case the cages have four decks, each carrying

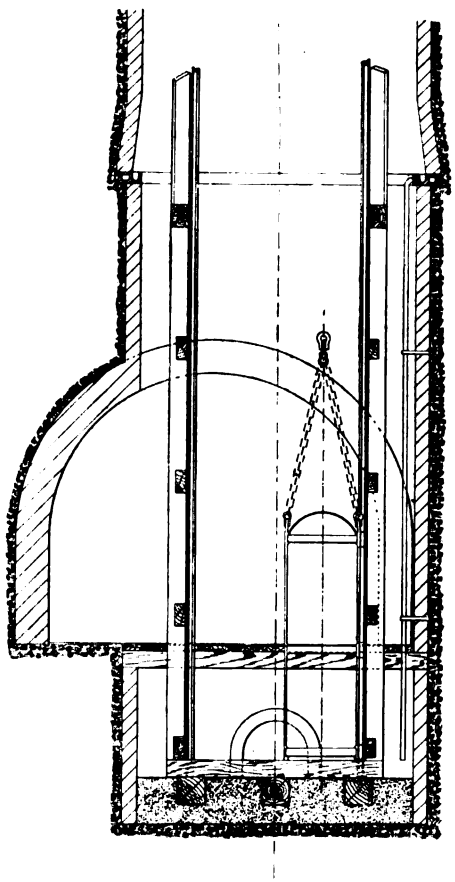

FIG. 616.

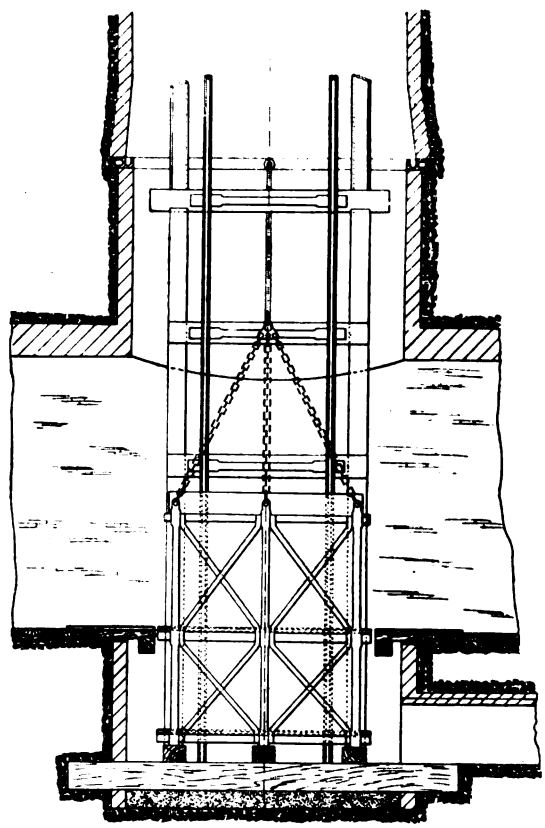

FIG. 617.

FIGS. 616 and 617.—CAGE GUIDE FRAMING AT PIT BOTTOM.

two tubs, the tubs having a capacity equal to 9½ cwt. of coal, and with this apparatus three men can change the four decks in thirty seconds, without any assistance beyond the necessary slack rope, which is let out from the winding drum as the decks of the cage at bank are changed.

At the pit bottom the cage should work in rigid guides, and if rope guides are

in the shaft, then rigid guides are often provided at the top and bottom of the pit, to steady the cage during changing and at starting. These may consist of separate guides upon the cage sides, or guides arranged to fit the rope guide shoes, in which case the rope guide is between them. In any case, as the shaft eye is widened out and usually arched for some distance on each side of the shaft, a frame of either wood or iron is necessary to carry the cage guides. Figs. 616 and 617 show a simple arrangement of bottom framing, with a shallow sump for a double-deck cage. Where a sump, however, is necessary for the gathering of water, the concrete shown would be omitted, and the three heavy baulks would be securely fixed into the shaft side and walling. The three lighter baulks are bolted to these, so as to be easily renewed as they become destroyed by constant dabbing of the cages. A drift is shown leading from the bottom of the sump to keep it clear of water. The guide frame is really a continuation of the shaft guides and consists of strong uprights tenoned into and bolted to cross beams built into the shaft walling. These cross beams are shown in the figure just below shaft water-collecting ring, and take the place of an ordinary bunton. The rail buntons are continued on the frame at the same distances as in the shaft.

For some distance on each side of the shaft, the inset or pit-eye is arched, for a width greater than the diameter of the shaft, to form a passage way. As it is desirable to keep the size of the arch as small as possible and the passage way as large as possible, only one way is often provided, as for a given width of archway one wide passage-way may be obtained for the same cost as two narrow ones. The thickness and form of the arching depend of course upon the nature of the ground. With a good, strong and reliable roof, probably no arching is necessary, side walls surmounted by steel girders only being required. On the other hand, if the ground is bad, it will be necessary to put in strong inverts and circular or barrel arches. The thickness of the arch may be taken as

$$T = 6\sqrt{R}$$

where

T = Thickness of crown in inches,

R = Radius of arch.

The arching is usually built in brick with cement. The space between the arch and the rock should be tightly packed with good ashes or sand.

The roadways at the pit bottom should be arranged to allow the full tubs to gravitate towards the shaft and the empty ones from it. This is attained by forming an inclined battery or kip where the natural inclination of the seam is against this, and the road for the empty tub is lowered sufficiently to allow them to run to a point where they can be attached to the rope. Where the cages are loaded from one side only, the inclination of the full road may be

carried on behind the cage, so that the empty tub runs from the cage with a velocity to acquire sufficient momentum to carry it up a reversed incline, and by means of automatic switches is switched on to the empty road, and runs back over past the shaft. Where the cage, however, is loaded from both sides of the pit, this arrangement cannot be adopted.

An arrangement of pit bottom, where "hanging on" takes place on both sides of the pit, and which is a very convenient one, is that adopted at Broomhill Colliery and shown in fig. 618 (Plate LXV). Here the haulage is on the main and tail system, and the sets are landed on inclined planes, so that the full tubs run towards the shaft on both sides of the pit. As the empty tubs come from the cage they are sent past the shaft on to the empty roads where they are made up into sets. As it would be a costly matter to arrange a gradient from the shaft for the empty tubs, a small endless rope hauling engine—shown on the left—is provided to make up the sets. Supposing it is required to make up a set on either side, the first tub is made fast to the rope—which is under the tubs—and set slowly in motion, other tubs being coupled on to this tub as it is drawn forward, until the number is made up to complete the set. The whole set is then quickly moved to the point where it can be coupled to the tail rope, where it is disconnected from the endless rope, which is then reversed and moved in the opposite direction to make up a set for the other side.

Various arrangements have been designed for the simultaneous decking of multi-decked cages. The simplest arrangement is, of course, to have two landings, as adopted at Newbattle Colliery. Here at the surface the heapstead is arranged with two floors, to suit the double-decked cages, which carry six tubs upon each deck. The full tubs run from the cage by gravity over the weighing machine to the tippler, where they are discharged of their contents, then to a creeper, by which they are raised high enough to allow them to gravitate back to the shaft. By a simple device the tubs are automatically switched one by one—first to the upper floor, then to the lower floor in rotation, and again in the same way to the right and left, to suit the ways of the cages, which are arranged to carry two rows of three tubs each. The cage decks are set to the same gradient as the floors.

At the pit bottom the full tubs from the workings are landed on a level with the top deck of the cage, and in front of the shaft on each side are two drop cages, as is shown in figs. 619 and 620 (Plate LXVI), which are from a drawing kindly supplied by Mr. J. Mackay. As shown, the cages are in position for changing the tubs. The full tubs are run off the drop cage on the right into the shaft cage, and the empties pushed out into the drop cage on the left. The empty tubs in the lower deck, however, do not remain on the drop cage, but are run right off, this deck merely bridging the space between the cage and the landing; the same applies to

the top deck of the left-hand drop cage after it is lowered. The adjacent cages are coupled together, and a brake provided with a hand-lever allows either cage to be gently lowered. During the period the cages are running in the shaft, the adjacent drop cages which are in the reverse positions to those shown in the figure—that is to say, the adjacent cage on the right will be "up," so that its lower deck will be level with the flatsheets; while on the left the adjacent cage will be "down," with its top deck level with the flatsheets—have full tubs put on the *bottom* deck of the cage on the right, and empty ones taken off the *top* deck of the one on the left, and the position is then as follows:—On the right, one cage is empty, the other is loaded with six full tubs on its bottom deck; on the left one cage, namely, that opposite the empty cage on the right, has six empty tubs on its top deck, while the adjacent cage is empty, so that one of both pairs of drop cages overbalances the other, and by means of the brake, worked by the hand-levers as shown, the heavier cage is dropped and the lighter one raised up. The cages on the adjacent side are then occupying the position as shown in the figure. The cages are loaded from one side of the pit only, and at the surface the full tubs are taken off the cages on the opposite side to that at which they are put on. The empty tubs taken off the cage at the pit bottom are carried up an incline worked by a creeper chain to the higher level, where they are attached to the haulage ropes. The advantages of this arrangement lie in its extreme simplicity and facility of operation.

Cages with four decks may be changed in the same way by making the drop cages long enough to suit the number of tubs carried in two of the shaft cage decks.

At the Cadeby Colliery four-deck cages carrying eight tubs are simultaneously decked by an arrangement of hydraulic lifts at both the surface and pit bottom. In this case four four-decked cages or lifts, two on each side of the shaft, are arranged so that when the cage is at the bank an hydraulic cage is directly opposite on each side, one loaded with empty tubs, the other empty. The empty tubs are pushed off the hydraulic cage into the shaft cage by an arrangement of push rods on a travelling vertical beam worked by an oscillating hydraulic cylinder, the empty tubs pushing out the full ones on to the empty hydraulic cage on the other side. During the time the cages are running in the shaft, the hydraulic cages opposite the cage which has just left bank are lowered whilst those opposite the cage coming to bank are raised, deck by deck, and the full tubs taken off and the empty ones put on at the heapstead level. Each lift is worked by three hydraulic rams; the middle ram, which is smaller than the outer rams, can be exhausted into an open cistern, or supplied with water under pressure, and supplies the balance of pressure to raise hoists. The tub catches on the different decks are coupled together and worked by a single hand lever. One man operates the rams for changing the tubs on three of

the decks, and controls the lowering and raising of the hoists while the shaft cages are running; while one man on each side of the shaft at the heapstead level attends to the changing of the tubs as the decks successively come into position with the floor level; they also change the tubs in the bottom deck of the shaft cages. The subsidiary cages which receive the full tubs are over-balanced by a counter weight, so that as soon as the full tubs are taken off, the counter-weight brings it back into position to receive the full tubs from the shaft cage when it again comes to bank. A similar arrangement is provided at the pit bottom.

In another arrangement similar to the above, devised by Herr Tomson, the adjacent cages are connected together by a rope or chain by means of an overhead pulley, in addition to being supported by hydraulic rams. The hydraulic cylinders, however, are cross-connected, so that the auxiliary hoist 1 is connected to the hoist 4, and 2 to 3, as shown in fig. 621. The adjacent hoists 1 and 2, 3 and 4, are also

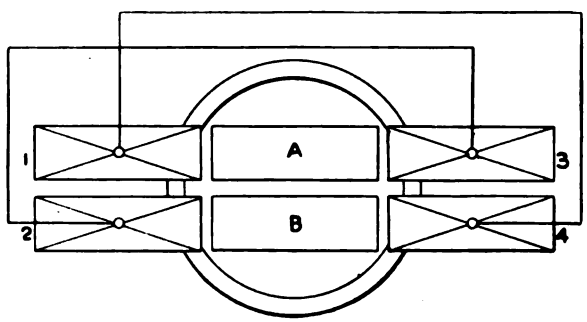

FIG. 621.—ARRANGEMENT OF AUXILIARY CAGES.

connected to each other by rope, so that the cages balance each other. On the shaft cage A coming to bank, the auxiliary cage, say 3, is charged with empty tubs, while 1 is empty ready to receive the full tubs from A; 1 and 3 therefore, are in position with all their decks directly opposite to A, while 2 and 4 are in position with their top decks level with the heapstead floor. After the tubs are changed, 3 is empty and 1 is loaded with full tubs, and the latter has therefore an excess of weight over the other three cages; by opening a valve the water from 1 flows to 4 and raises it, which is then loaded with empty tubs as each deck successively ascends, whilst the full tubs are taken off 1 as it is lowered. At the same time, as the adjacent cages are connected together, 2 rises while 3 descends. The connecting pipes are further arranged so that any of the rams may be put in communication with the service pressure pipe, or exhaust pipe; or again 1 and 3, or 2 and 4 may be put in direct connection with each other; but under ordinary conditions of working owing to the system of balancing the cages, very little water from the pressure supply is

PLATE XLV.

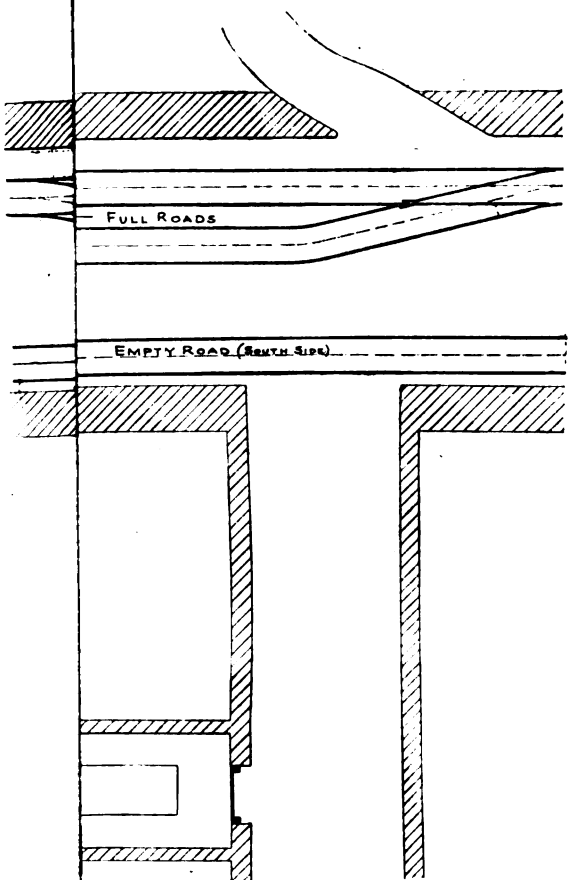

LLIERY.

Fig. 619.

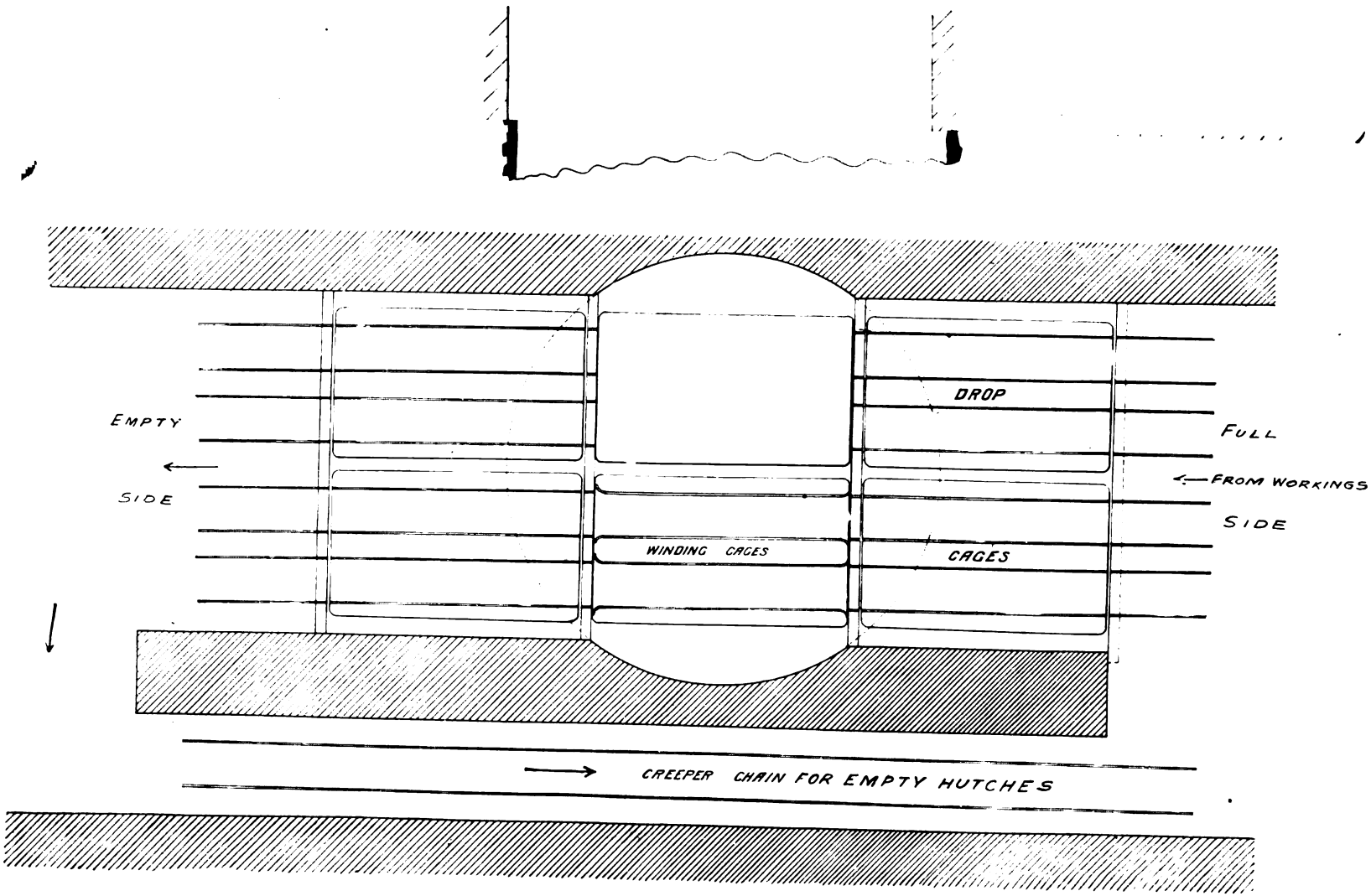

Fig. 620.

Figs. 619 and 620.—Arrangement of Drop Cages at Newbattle Colliery.

FIG. 624.

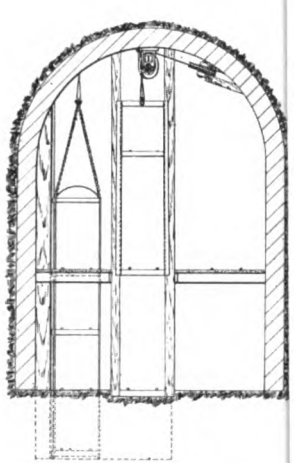

— SECTION AT AB —

FIG. 626.

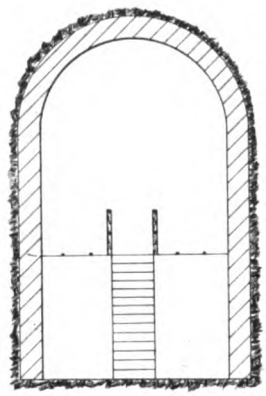

— SECTION AT EF —

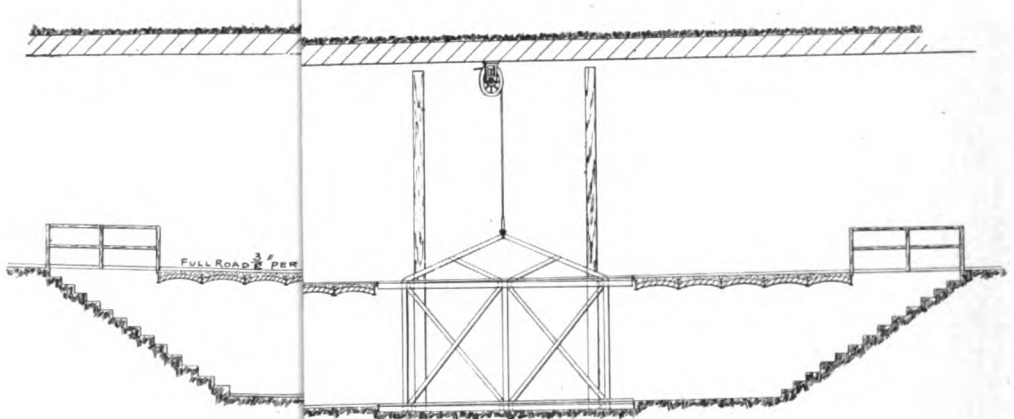

ON.

SIMULTANEOUS DECKING.

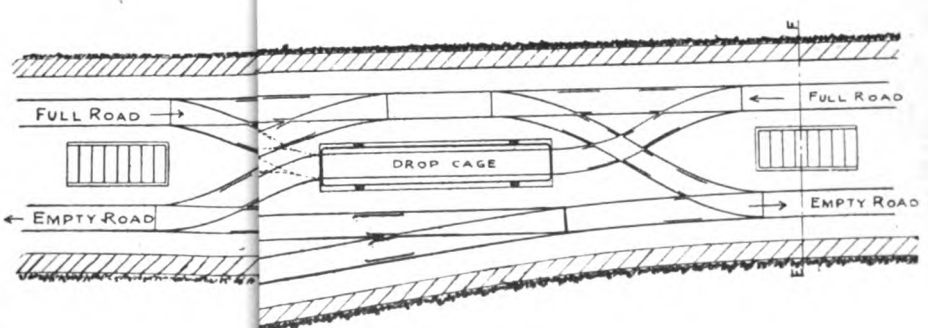

SIMULTANEOUS DECKING.

FIG. 627.

FIG. 628.

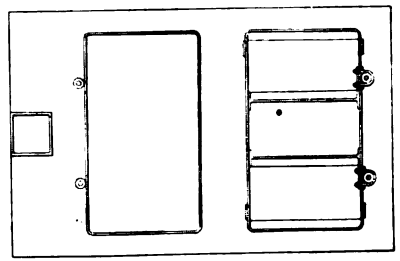

FIG. 629.

FIGS. 627, 628 AND 629.—ARRANGEMENT FOR DROP STAPLE.

required. The decks of the subsidiary cages are set at an incline so that the tubs run off and on without the aid of any motive power.

The objections to hydraulic machinery are its necessarily somewhat complicated nature, cost of keeping in repair, and its liability to go wrong. Its adoption is, however, a question of capital expenditure *versus* working cost, and its use enables a small diameter of shaft to yield a large output, with a minimum of manual labour, so far as changing is concerned, and the time occupied is of course merely that required to change a single deck.

An arrangement of pit bottom designed to work in connection with a double heapstead at the surface is shown in figs. 622 and 626. It is arranged for loading the cages from both sides of the pit. As will be seen, two drop cages, one of which is heavy enough to overbalance the weight of the other, are connected together by an overhead rope, and form the means of communication from the higher level—where all the tubs from the workings are landed—to the lower. The main cages are four-decked, and carry eight tubs; two of the decks are changed at a time, after which the main cage is changed by the winding engine in order to change the remaining decks. The drop cages are constructed to hold four tubs, and are equal in height to the distance between the two floors, so that the top of the cage bridges over the space when the drop cage is resting on the lower floor. Supposing the cages are being loaded from the right hand side, and that the drop cage on this side is the lighter one, four full tubs would be run on to the drop cage on this side and lowered to supply the two bottom decks, and four would run straight to the shaft to supply the two top decks. The tubs in the drop cage are removed on the right-hand side, from which side they are put into the cage. The drop cages, by means of the overbalance, are then restored to their former positions. On the main cage descending, two decks are changed simultaneously. The cage is next moved by the winding engine, and the other two decks changed. The empty tubs from the top decks pass on to the empty road, where they may be sent to either side of the pit; the tubs from the lower decks run into the drop cage on the left-hand side, which is down. During the time the shaft cages are running, four full tubs are put into the right-hand drop cage, which is lowered, raising at the same time the four empty tubs in the left-hand cage, and the cages again raised and lowered after removing the tubs. The full tubs are thus always put into the lighter cage, and the empty ones into the heavier; the extra weight due to the full tubs then raises the heavier cage and empty tubs, which are discharged by means of automatic catches and tilting cage bottoms, and the empty cages at once restored to their original position, which means that the drop cages must each be raised and lowered again during the period occupied by the main cages running in the shaft.

The upper floor is constructed of steel cross-girders and jack arching covered

with concrete, and a stairway on either side gives access to the lower floor, as shown. Where the cages are loaded from one side of the shaft only, the arrangement is simplified, and the roadways may be constructed with gradients so as to require little or no handling of either the full or empty tubs.

It is often necessary to lower coals from one seam to another, to avoid loading the cages from insets in the shaft, and time lost in so doing. It cannot, however, in some cases be avoided, and it is necessary to form a scaffold in the pit, with long splayed fending guides to conduct the cage past this point, and hold it steady during loading, automatic or hand-worked gates being provided to protect the entrance to the shaft. Where a staple can be sunk it is better to do so, even though this may entail a little more expense in sinking, as the expenses for working will probably be about the same, and the output may thereby be increased.

An arrangement of overhead gear for working a staple is shown in figs. 627, 628 and 629. As will be seen, this consists of a wood frame of squared timbers supporting a pulley provided with a brake, over which the winding rope passes. The cages in this case work in wire rope guides, which are kept taut by a long screw. The brake consists of a top and bottom strap hinged at the back, and connected by levers to a hand lever arranged in a convenient position for the banksman. The weight of the full tub raises the empty one, the rate of ascent being controlled by the brake.

Signals may be exchanged between the top and bottom of the pit by rappers, consisting of a pivoted hammer raised by a wire signal strand connected to a lever, striking a plate, or by electric or steel spring bells. Of the latter type is that shown in fig. 630, manufactured by Messrs. Archibald Baird and Son Limited, which consists of a gong mounted upon a spindle carrying a wheel beneath, fitted with a trip mechanism and a strong spiral spring for returning the wheel, after striking, back to its former position. It has four arms, to any one of which the cord or wire may be attached. On pulling the cord the trip trigger lifts the small lever to which the hammer is attached, and so raises the latter, which is quickly brought back to strike the bell by a flat steel spring when released. The spiral spring connected with the wheel must be strong enough to easily pull back the lever and wire strand after the bell has been rung.

The significations of the signals are denoted by the number of rings, and to prevent mistakes arising from the number of rings given being misunderstood, an arrangement has been devised to register the number automatically, as is shown in fig. 631. This consists of a dial having a series of figures upon its circumference, and a pointer in connection with the hammer lever. As the onsetter pulls the lever, this pointer registers the number of strokes, so that it is easily seen if a signal has been given, and what it signifies. A small vertical lever, which may be

attached to a cord and moved either automatically or by the engineman, releases the pawl and allows the pointer to return to the zero position. Fig. 632 shows the bell in connection with a winding indicator for registering the number of turns of the drum. This consists of a large dial supported by a pillar, in which is fixed the gear—consisting of small mitre wheels or a worm and worm-wheel—turning the

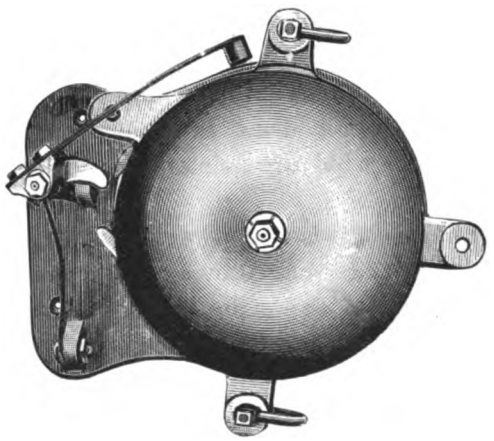

FIG. 630.—SIGNAL BELL.

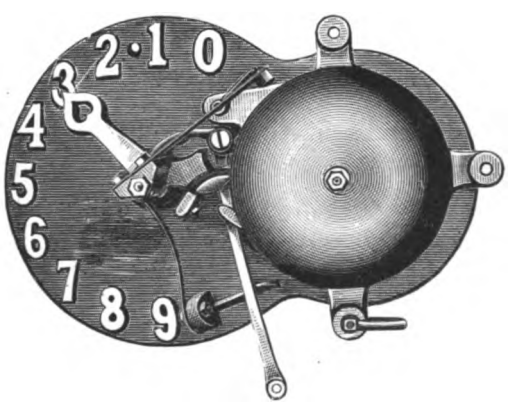

FIG. 631.—SIGNAL BELL WITH AUTOMATIC REGISTER.

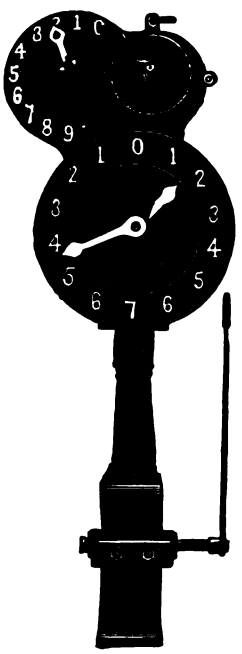

FIG. 632.
SIGNAL BELL AND WINDING INDICATOR.

two pointers. The dial circumference is divided into numbers representing the number of revolutions of the drum, so that in the dial shown the number of revolutions will be fourteen. The long hand on the dial goes round once for each revolution of the drum, and if the drum be parallel and 14 yards in circumference, it follows that each division will represent 1 yard of ascent or descent of the cage.

The small hand makes a complete revolution of the dial for a complete winding, one division or number representing one complete revolution of the long pointer or drum. It will thus be seen that any depth of winding can be accurately divided, and extra marks may be painted on the dial to denote any position or point at which it may be desired to stop the cages. A special striking arrangement (not shown in the figure) is arranged to strike a gong at the back of the dial when the cage is seven fathoms (or other distance agreed upon) from the surface, to warn the engineman as required by the Coal Mines Regulation Act. The pointer registering the number of strokes of the bell may be automatically arranged to return to the zero position, by a cord wound on a small drum in connection with the indicating gear, so that at the end of the wind the pointers on both dials all stand at 0.

Another common form of cage indicator consists of a weight with a pointer attached, working on a fixed vertical guide, and actuated by a cord or chain from a small drum, driven by a drag crank from one of the main engine cranks. A trip mechanism is provided to ring a gong when the cage is approaching the surface. Others are simple dials worked by worm and worm-wheel, and others again are vertical screws which actuate a nut provided with a pointer and trip mechanism to ring a bell. Probably a vertical arrangement is the best to adopt, as this better represents the cages running in the shaft. For terminal points the engineman depends upon a chalk mark on the drum (which is easily altered) and a fixed pointer placed in a convenient position.

Bibliography: *Transactions* of the Federated Institution of Mining Engineers; *Transactions* of the Institution of Mechanical Engineers; *Lectures on Mining*, by Professor W. Galloway; *A Text Book of Coalmining*, by H. W. Hughes; *Ore and Stone Mining*, by Sir C. Le Neve Foster; *Haulage and Winding Appliances used in Mines*, by Carl Volk.

CHAPTER VI.

HEAPSTEADS, SCREENING AND WASHING PLANT.

A FEW years ago the preparation of coal for the market, whilst the better seams were being worked, was a simple operation. As a rule the heapstead consisted—and does so yet at very many collieries—of an open space around the shaft on raised ground, covered with flat cast iron plates or "flatsheets," upon which the tubs could be easily turned and twisted in any direction. On one side facing the railway, which was on lower ground, separated from the higher ground by a heavy retaining wall, were placed the "kick-ups" or tipplers, in which the tubs were placed, and delivered the coal "end" on upon a fixed-bar screen. The screen consisted of bars separated by washers on through rods, set at such an angle that the coals would roll or slide down them. As a rule, the large coal would roll down the screen and over the end into the wagon with such a velocity as to break up upon the bottom. To prevent this, a door was usually hinged to the sides of the screen near the top and worked by a rod from the platform at the end of the screen, and the coal was either regulated down in small quantities at a diminished velocity or might be prevented from sliding down altogether. At the end of the screen bars the screen was flat, and a man on either side of this flat part shovelled the coal into the truck below, and at the same time picked out any stones or dirt he came across, which was thrown to one side, and filled into a wagon at intervals, when it would be taken to the waste heap. The small coal falling through the bars dropped into a hopper, provided with a sliding door at the bottom, which on being opened discharged the coal into a wagon placed underneath. Small or wet coal would lie upon the bars, in which case it was necessary to rake it down with long rakes.

A weighing machine was usually placed in front of one of the kick-ups, so that the tubs of coal going to the screen in connection with the kick-up could be weighed, and the average of the tubs so weighed was taken as the weight of all the tubs coming out of the pit.

Such an arrangement was very unsatisfactory, so far as the weighing of the coal was concerned, and to improve matters, an arrangement called " Billy Fair-play " was introduced. This consisted of suspending the flat part of the screen to a strong spring balance, so that all the large coal passed over the screen was weighed, and the miners were paid on this weight, prices being adjusted so that nothing was paid for any small coal. This arrangement worked well, where it was to the advantage of the owners to have as little small as possible made and filled by the coal hewers, but as the better seams became exhausted, thinner and poorer seams had to be worked, and as with increased competition the markets became more exacting, better means of sorting and cleaning the coal became necessary.

With the introduction of better screening plant, mechanical means for handling the tubs, so as to reduce the number of men employed in banking-out operations, were also brought into use, uncovered open spaces gave place to roomy covered superstructures, forming the heapstead, to protect the workmen from inclement weather; appliances were introduced to facilitate the rapid decking of cages, hand-worked end tipplers gave place to power-driven side tipplers, until now it is no uncommon thing to see an output of 1,000 or 2,000 tons per day handled with mechanical means by two or three men and boys. Probably in no other industry are there so many facilities for the mechanical handling of material, or more necessity for their employment for economical working, than in the handling and screening of coal at the pit's mouth.

The arrangement of screening plant best suited for any particular colliery will depend principally upon the class of coal worked, and the purpose or market it is intended to serve. For instance, collieries producing coal for coking purposes only will not require anything like the elaborate screening plant as will be required by a colliery producing household and steam coal. For the former, in fact, nothing more is required in the shape of screens except those necessary to receive the coal as it leaves the tipplers, and for separating the large— which goes directly to a breaker —from the small, to which the large coal is added after being broken, when both are conveyed to a coal-washer. After being sized and washed, it is then conveyed to a disintegrator or crusher, where it is finely broken up and conveyed by elevators to storage hoppers, from whence it is taken in tubs to the coke ovens. For a colliery producing steam or household coal, from seams of varying qualities and thicknesses, it may be necessary to provide plant for dealing with several classes and sizes of coal, and a washing plant for dealing with the small sizes. The latter, in fact, is becoming more and more general, as it is now recognised that the only economical way to remove the dirt from the small coal—and it must be removed to make it marketable—is by washing.

For small landsale collieries with an output of a few tons per day the old type

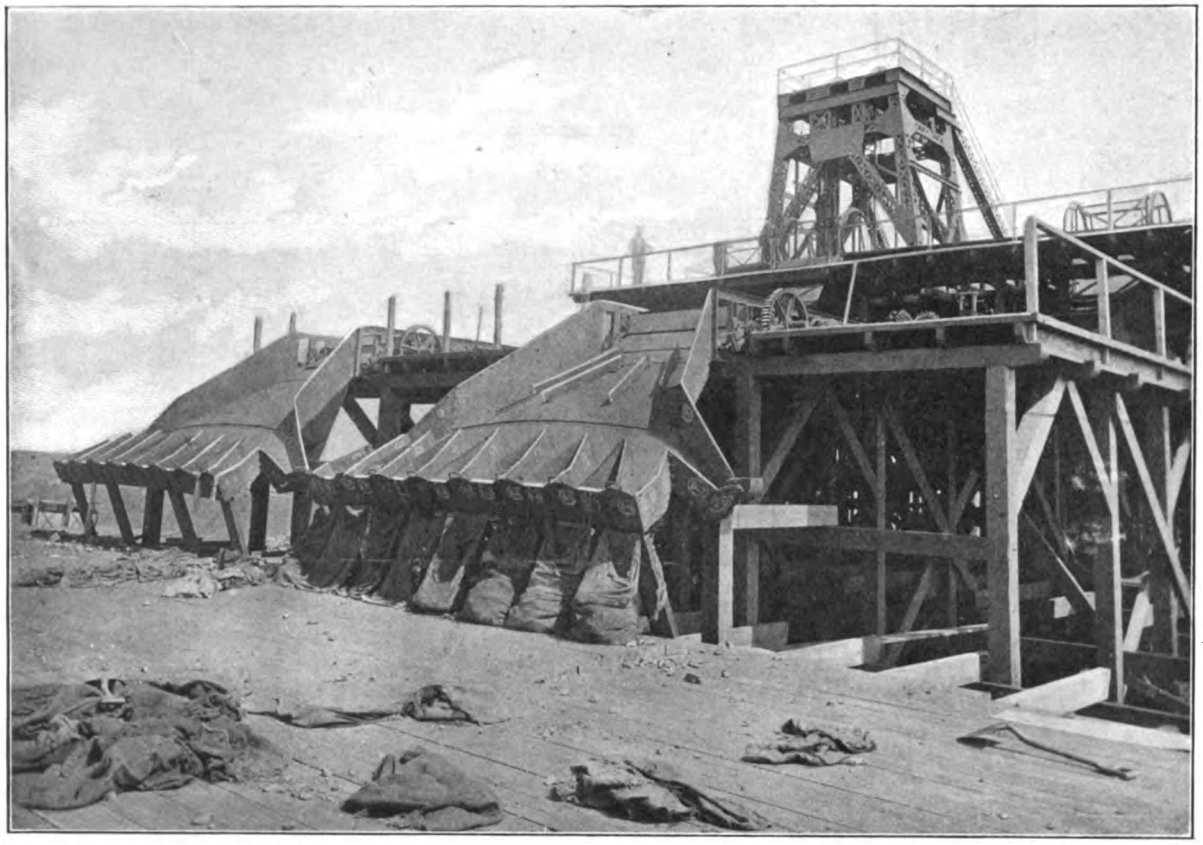

FIG. 633.—SHOWING BAGGING ARRANGEMENT AT ENDS OF PICKING BELTS.

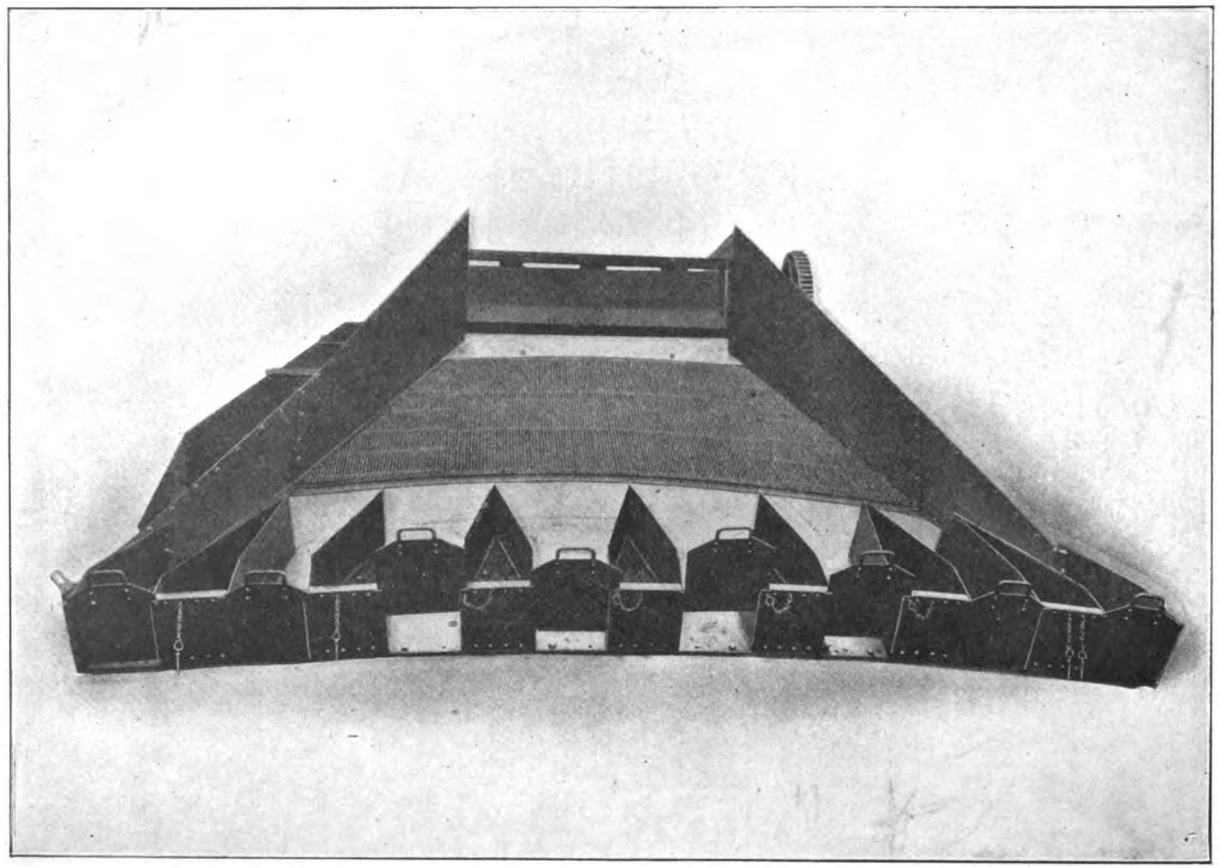

FIG. 634.—SCREEN AT END OF PICKING BELT WITH ARRANGEMENT FOR LOADING INTO BAGS.

of screen is still in use, and in all probability will remain so, as it is eminently suitable for the purpose. They may—and often are—used about collieries where it is convenient for loading carts for landsale, or as a relief screen for other purposes. They may be made dumb by allowing the hopper to fill up, or by placing a thin sheet iron plate over the bars. As a rule the coal will not slide so freely without the plate as with it. For larger collieries near towns which do a landsale trade in bags, an arrangement has been introduced where at the end of a cleaning belt a shoot is formed with compartments at the end for filling the bags, as shown in fig. 633, which is from a photograph of such an arrangement erected in South Africa by Messrs. Jos. Cook and Sons. The end shoot may be provided with a bar or gauze screen to remove the small made on the cleaning belt, as shown in fig. 634.

As before stated, the arrangements for collieries producing coal for coking only, so far as the heapstead is concerned, is a simple matter. If the coal can be delivered from a drift, the tubs are hauled to a point in close proximity to the coke ovens, either separately by an endless rope, or in sets by a main-and-tail rope. In either case they are landed on a bank high enough to allow them to gravitate over the weighing machine to the tippler, where their contents are discharged; they then gravitate from the tippler back over to the empty "landing," where they are re-attached to the mine hauling rope. In case the coal is raised in a shaft, they may run either by gravity or be hauled by a creeper to the tippler, passing over a weighing machine on the way, and from thence either gravitate or are hauled back to the shaft. In close proximity are the necessary cabins or offices for the foremen and workmen, and the collection and sorting of tokens. These are usually light wooden structures, or wood frames provided with windows and doorways, and covered with corrugated sheet iron, or if exposed to the weather, may be of brick. The tipplers are usually enclosed in a building, which may be of brick side walls covered with a slated roof or corrugated sheet iron, or a steel structure with sheet iron sides and roof.

The coal for coking is now always crushed, and latterly, for by-product ovens, compressed, so that no necessity exists for careful handling. From the tipplers the coal may be discharged upon a vibrating perforated screen, so that all below a certain size will pass through, the large coal going to a breaker, and after being broken is passed into the same hopper as the small which passed through the screen, from which it is raised in an elevator to the top of the washing plant, where it is sized and washed. It is then passed through a revolving or vibrating drying screen, and afterwards crushed or disintegrated into fine particles, and passed by means of elevators and conveyors into the storage hoppers. The latter may be constructed of wood or iron, the former being cheaper to construct, and answers the purpose quite as well as an iron structure, which in the course of

years will suffer more or less from corrosion, which is practically unavoidable with the storage of wet coal. The life of the latter, however, will be longer than a wood structure, which may be from twenty to thirty years, and the choice therefore depends upon a consideration of the capital cost and the term of years the hopper is likely to be required. The capacity of the hoppers will depend upon the quantity of coal necessary for charging the ovens, but should be at least equal to about one day's work, so that should anything interfere with the supply of coal from the pit, the working of the ovens may be continued.

The hoppers, of course, must be high enough to allow of a tub being run under to be filled, the rail level being at the same height as the top of the coke ovens or compressor. The total height of the building, therefore, will be considerable, and up to the rail level may be constructed of masonry, this being probably as cheap as an iron structure, and certainly more substantial, and practically forms a raised foundation for the superstructure.

Provision must be made for raising material such as props, horse food, bricks, &c., from the ground level to that of the heapstead, the simplest method being that of an electric or steam hoist; though, on the other hand, it may be more convenient to construct a bank which may be worked in various ways either by a rope or creeper chain driven by electricity or steam.

Collieries producing steam or house coal, however, must erect more elaborate plant, the simplicity or multiplicity of which will depend upon the varying qualities of the seams being worked, the number of sizes or classes of coal required, and the degree of thoroughness with which the necessary cleaning operations must be carried out.

The different classes of coal usually prepared for the market may be put as follow:—

1. Best hand-picked.
2. Best selected.
3. Ordinary best.
4. Cobbles or large nuts.
5. Trebles or smaller nuts.
6. Nuts.
7. Peas.
8. Duff.
9. Unscreened.
10. Small or slack.

All of these, however, vary more or less according to the requirements of different districts; but the mechanical means used for sorting and classifying are similar, and in designing screening plant the objects to be attained are:—

(*a*) Careful handling to reduce breakage of the coal.

(*b*) Facilities for rendering the handling, cleaning and sorting to be carried out with a minimum of labour.

The heapstead arrangements for handling the tubs will be similar to that already described for a colliery producing coking coal, with the exception that probably more tipplers will be required, which should be constructed to empty the coal gently on to the screen below. From the tippler the coal is passed to a vibrating or jigging screen, where the small is taken out, the proportion depending upon the limiting size of the best coal, which may vary from pieces of three or more inches to $\frac{7}{8}$ in. or $\frac{3}{4}$ in. in diameter. (By diameter is meant, roughly, the size of a piece of coal which will pass through a hole of the diameter stated; often the holes are square, and the pieces of coal are of all shapes, but the expression "diameter" is intended to cover all shapes). The vibrating screen may be arranged to further classify the small coal, which is passed to different hoppers and thence to elevators for further treatment or to travelling or conveying belts to shoots, where it is discharged into trucks. The best coal is delivered from the vibrating screen to a cleaning belt, on each side of which men and boys or girls pick out the pieces of dirt, consisting of clay, stone, pyrites, shale, inferior coal, &c., taking up the very large pieces of coal with shale or inferior coal adhering and breaking them up if necessary to remove it. The out end of the belt may be hinged, so that it may be lowered into the wagon where the coal is gently discharged; or it may be received on a separate shoot provided with screen bars to remove any small coal due to breakage or abrasion of the large coal as it is moved along upon the belt, in which case the shoot at the end of the screen may be lowered into the wagon. The dirt picked out may be laid in a heap upon the belt-house floor, or passed to another conveying belt, where it is discharged into wagons to be removed to the spoil heap, or may be further treated by passing through a breaker and washed to recover the coal. Where the dirt is laid upon the floor or dropped into hoppers, it is usually removed at stated intervals by running wagons under the hoppers, by filling it by hand upon the main coal belt after work hours. The latter method, though not ideal, may sometimes prove more convenient and cheaper than adopting other means.

Such is the usual method of dealing with the screening of coal, the actual arrangements of individual collieries being laid out to suit the site upon which they are erected, and the classification of the coal to suit the requirements of the market it may supply.

Of the table of classes of coal given above, 1, 2, 3 and 4 may be cleaned by hand labour, and the smallest diameter may be taken as 3 or $2\frac{1}{2}$ inches; below this size it is useless attempting to pick out the dirt, and the cheapest method is to remove it by washing. Attempts have been made to remove the impurities

in small coal by a dry process, which, as in washing, depends upon the difference of the specific gravities of the coal and dirt. In America it has been tried to separate the lighter coal from the heavier dirt by an arrangement of shaking screens; another method is by separating by shaking and allowing a current of air to blow off the lighter particles of coal, but neither system appears to have met with any success. In both cases dust would be troublesome and the efficiency low. For class (1) the best arrangement consists of a line of railway, running alongside a belt, upon which a truck stands, and is filled by two men, one inside the truck and another standing on a platform near the belt. The latter seizes upon the largest and best lumps of coal on the belt as they pass along, and hands them to the assistant in the wagon, who packs them carefully. The remainder of the coal is discharged into the wagon at the end of the belt as class (2). Class (3) may be coal from a special seam, or it may be coal which is carefully cleaned upon the belt while the latter is standing or moving very slowly; indeed, in some cases special short belts, which are only long enough to receive a "tub" of coal, are sometimes adopted, which, so soon as the coal is spread over the belt, the latter is stopped and the dirt carefully picked out; the belt is then started again to convey the coal into the wagon, and at the same time to receive another tub of coal, when the cycle is repeated. It would appear, however, to be better to have longer belts and move them slowly, and thus keep a continuous and steady supply. Class (4) would be discharged from the vibrating screen upon a separate belt, and cleaned in the same manner as class (2) or (3). Classes (5), (6), (7) and (8), if to be cleaned, would be conveyed to a washing plant, but if the coal contains so little dirt as to render this unnecessary, it would be conveyed to a revolving separator or screen, where it would be sized and discharged into conveyors, and carried direct to the wagons. This is probably the most effective means, but the means adopted is influenced to some extent by the percentage of the different classes of coal made. For instance, the vibrating screen may be made to separate (3), (4) and (5), discharging each class to a separate belt. Class (5) would contain all below that size, and by discharging it into wagons over a fixed screen at the end of the belt, a fair proportion of all below class (5) may be taken out.

The particular arrangements at different collieries are many and varied to suit the circumstances of the requirements. In cases where the space available for the erections is cramped, considerable ingenuity has been exercised in devising the plant that will best answer, with the least expenditure of capital. Again, others are arranged in large roomy brick buildings, involving a large expenditure of capital, but probably reducing thereby expenses in working and upkeep. The whole question of design then resolves itself into one which will give the best efficiency and least cost in working, with a minimum expenditure of capital.

PLATE XLIX.—(*To face page 316*).

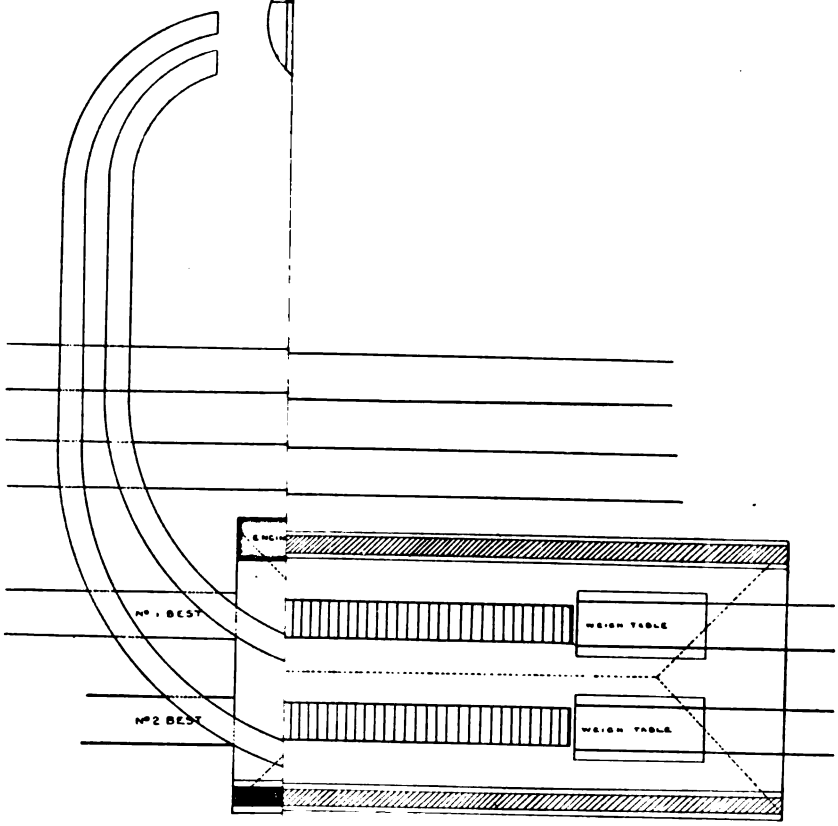

PLATE L.

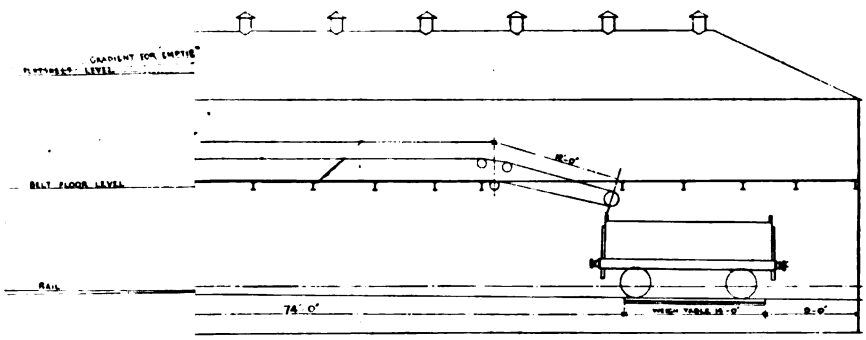

COLLIERY.

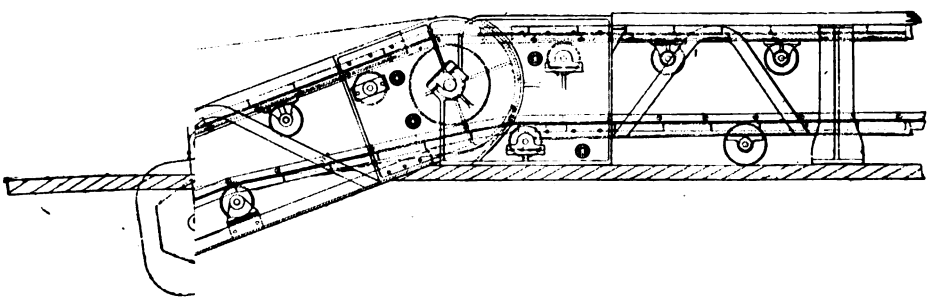

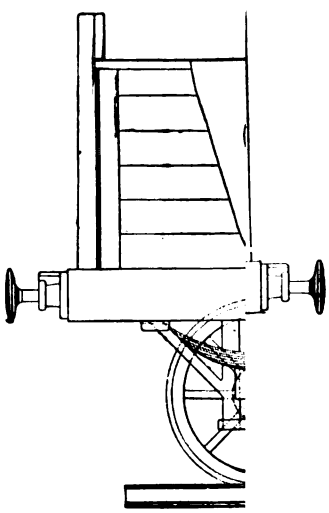

NG BELT.

O.

Heapsteads may be of brick, wood or iron structures. The former is probably the most expensive, but has the advantage of being lasting, substantial and free from vibration. Wood is now seldom used, as in addition to the serious danger from fire, it is most unsuitable for carrying machinery, and its lasting qualities are limited, so that in a few years of working the expense in upkeep becomes considerable. Iron structures are particularly suitable, and are by far the most common. They may be constructed solely from I section girders, or a combination of brick side walls or cast iron columns and transverse girders supporting the floors, the latter being of wood. In the former care should be taken in arranging stays and

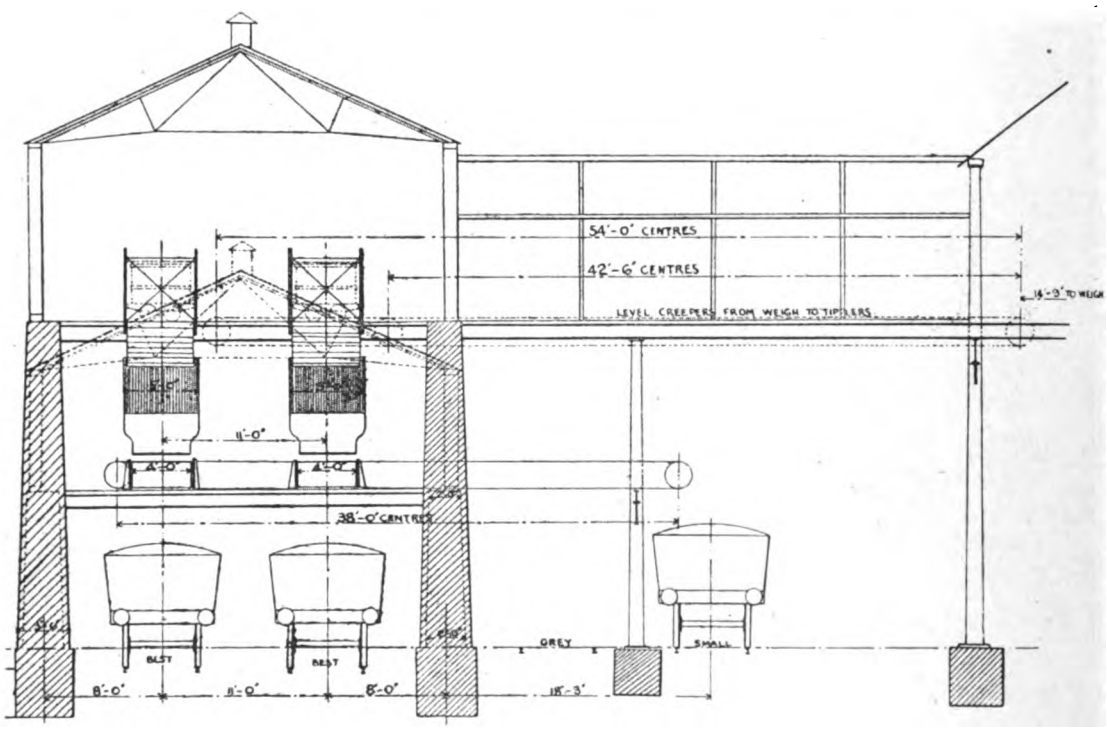

FIG. 637.—ARRANGEMENT AT CAMBOIS COLLIERY.
Cross Section.

cross ties to reduce "vibration," which in heapsteads constructed with I section uprights is often considerable, more so than with round cast iron columns. In buildings with brick side walls extending up to the first floor level, vibration is practically eliminated.

Of the latter type of building a good example is that at Cambois Colliery, designed by Mr. Hunter and shown in figs. 635, 636 and 637. As will be seen from the section (fig. 637), the building consists of brick side walls—relieved by arched

openings up to the first floor level—which are carried up to the top floor level rolled steel girders being built into the walls to carry the flooring. The superstructure above the walls consists of corrugated sheet iron, secured to wood fixed to the iron side frames. The whole is covered by corrugated sheet iron, supported upon mild steel principals, and ample lighting is provided for by means of skylights and side windows. A gangway connects the old heapstead with the new portion, as shown.

The tubs from the pit after passing over the weighing machine run to the creepers, as shown in fig. 635, and are propelled by them to the tipplers. The creepers are of the single and double link chain type, and are driven separately at the rate of about 50 ft. per minute, delivering three tubs per minute to each of the tipplers. The tipplers are of the power-driven rotary type, and rotate at the rate of seven revolutions per minute. From the tipplers the coal is delivered on to a spreading belt, placed above the jigging screen and underneath the tipplers, and which convey the coal in a regular supply to the jigging screens, instead of delivering the coal upon the screen in a heap. The jigging screens separate the best from the small coal, the small falling through a gauze on to a plain plate, from which it is jigged on to a small coal cross belt. The jigging screens are moved bodily, and the plain plate underneath the gauze is continued, so that the small coal may also be delivered on to the best coal cleaning belt, immediately under the point of delivery of the best coal. This plate is provided with a hinged door actuated by means of a lever on the side of the screen, so that when closed it forms a continuation of the plain plate, but when open—as shown in fig. 636—allows the small coal to fall on to the small coal belt. When closed, however, for the purpose of making unscreened, the small coal is delivered in the same direction as the best, and upon the same belt. The advantage of this arrangement—in addition to its simplicity—is that the large coal, instead of being mixed with the small—as is the case when a deadplate covering the gauze is used—is uppermost, and therefore pieces of *débris* may be more easily seen and picked out.

The screens are vibrated by means of variable throw eccentrics, and the suspending links are bushed with gunmetal.

The picking belts are 87 ft. long and 4 ft. wide, made up of steel plates $\frac{3}{16}$ in. thick attached to a pair of chains of the single and double-link type; the frame consisting of mild steel angle bars secured to cast iron frames and intermediate standards, and strongly braced. The rollers carrying the chains are of cast iron keyed to mild steel spindles running in cast iron carriages bolted to the framework of the belt. The belts are provided with lowering jibs, so that the delivery end of the belt may be lowered right down into the wagon as shown in fig. 638, thus minimising the breakage of the coal. As will be seen, this consists of hinging the

belt frame, so that a portion near the end may be lowered or raised, by means of overhead gear arranged for this purpose. At the end of the fixed portion of the belt frame is a cast iron bracket carrying a strong shaft, which forms a pivot for the jib end to swing upon. The same shaft also carries rollers for supporting the belt chains. The swing portion of the belt frame at the articulated end is fitted with cast iron side cheeks which fit the cast iron brackets of the fixed portion of the frame as shown; whilst at the other end the brackets are arranged to take sliding blocks fitted with screws for taking up the wear and stretch of the belt chains. The trucks immediately under the jib stand upon weighing machines and are weighed after being filled, as shown in fig. 636.

To enable the empty tubs to be raised to a sufficient height to allow them to gravitate back to the shaft, steam lifts are provided. As the empty tub is pushed out of the tippler by the incoming full one, it runs on to the circular table of the hoist, which then makes an upward stroke, and places the tub on a level with the empty way. The tub is then automatically released upon the hoist table and runs back to the shaft; the hoist then descends ready to receive another tub. As will be seen, the empty way is at right angles with the full way from the tippler, and consequently the hoists are arranged to make a quarter turn in ascending, reversing the operation in descending.

This hoist, which is interesting, is shown in figs. 639 to 642. As will be seen, it consists of a long steam cylinder provided with an ordinary slide valve, which is operated by a hand lever. The piston is solid with the rod, and at the top of the latter is the table resting upon a pivot. The table works between four guide ropes, to the framing of which are attached two angle bars forming a spiral of a quarter turn. As the table is raised, a projection fitted with a roller engages in this spiral, and as the former is free to turn upon the pivot it revolves a quarter of a turn, carrying the tub with it. A stop retains the tub in position on the table, which is automatically depressed as the table reaches the top, thus releasing the tub, which being on an inclined way runs off by gravity. A small balance weight lifts the stop on the descent of the table. The arrangement is at once simple and reliable, and is particularly applicable where the space is too cramped to allow of a creeper or an inclined plane and curves. The cylinder is suspended by means of two cross girders, one end of which rests upon a main girder, while the other ends are strapped to a girder above them. A detail of the strap is shown on the right of the cylinder in fig. 640.

The gearing driving the plant is of steel, friction clutches being provided, so that any belt or screen may be stopped without interfering with the others. The shafting is of Siemens-Martin steel turned the full length, and provided with all necessary bearings, &c. The bearings have top and bottom brasses and are fitted

with Stauffer lubricators. The work was carried out by Messrs. M. Coulson and Co. Limited, who kindly supplied the particulars.

A particularly compact screening plant, both as regards height and the ground space occupied, is shown in figs. 643, 644 and 645, erected by Messrs. Silvesters for Messrs. the Madeley Coal and Iron Company's Leycett Colliery. As will be seen from the plan (fig. 643), the plant consists of four tipplers, four shaking screens, eight picking belts, and slack conveyors. The plant is arranged in duplicate, and deals with coal from two pits, the tubs gravitating from the shafts to a weighing machine, thence to the tipplers, and from these to a creeper chain, which carries them up on incline sufficiently high to allow them to run back to the shafts. The shaking screens, which are at right angles to the picking belts, are placed one over the other, but arranged to discharge the coal on to belts running in opposite directions. Each screen has 14 ft. of perforated plate to take out the small coal, and other perforated plates underneath to separate the cobbles or nuts. In all eight classes of coals are cleaned and loaded over four roads, and the "small," from four different qualities of coal, conveyed direct to the boilers or coal-washer as required. The picking belts are 27 ft. and 18 ft. respectively in length by 4 ft. in width, consisting of steel plates $\frac{1}{4}$ in. thick, secured to two forged steel link chains of the single- and double-link type, the former being 2 in. by $1\frac{1}{4}$ in., and the latter 2 in. by $\frac{5}{8}$ in., connected together with $\frac{7}{8}$ in. diameter turned pins, the holes in the links being bored to suit. The plates are provided with rubbing or wearing strips on the outer edges. The loaded side of the belt is carried on turned cast iron rollers spaced every 4 ft. centre to centre, attached to the top by 4 in. by 3 in. by $\frac{1}{2}$ in. steel angle bar forming the side frame. The bottom side of the belt is carried on rollers in a similar manner, the rollers being spaced 8 ft. apart.

The screens are suspended by hangers from the overhead girders, and are actuated by means of solid forged bell crank levers, the lower part of which is mounted in bearings 6 in. long secured to a girder. These levers are driven from short crank shafts,* which are primarily driven by belting from the main shaft, 5 in. in diameter, driven by the engine as shown on the left in fig. 643. Each crank shaft drives one screen, and is fitted with a heavy flywheel, and fast and loose pulleys with striking gear, suitable for a belt 6 in. in width. The whole of the pull and thrust is taken by a very massive brick pier, which is quite independent of the screen structure, and therefore is entirely free from the vibration due to the shaking screens, which is absorbed by the masonry pier.

Each tippler, screen and belt is independent of each other, so that in case of breakdown only the particular part affected is caused to stand, and the belts are driven through slipping or friction clutches, so that should any obstacle (such as,

* *Note.*—In the drawing (fig. 644) the levers are shown actuated by eccentrics, which is an error.

PLATE LI.—(*To face page 320*).

FIG. 639. G. 640.

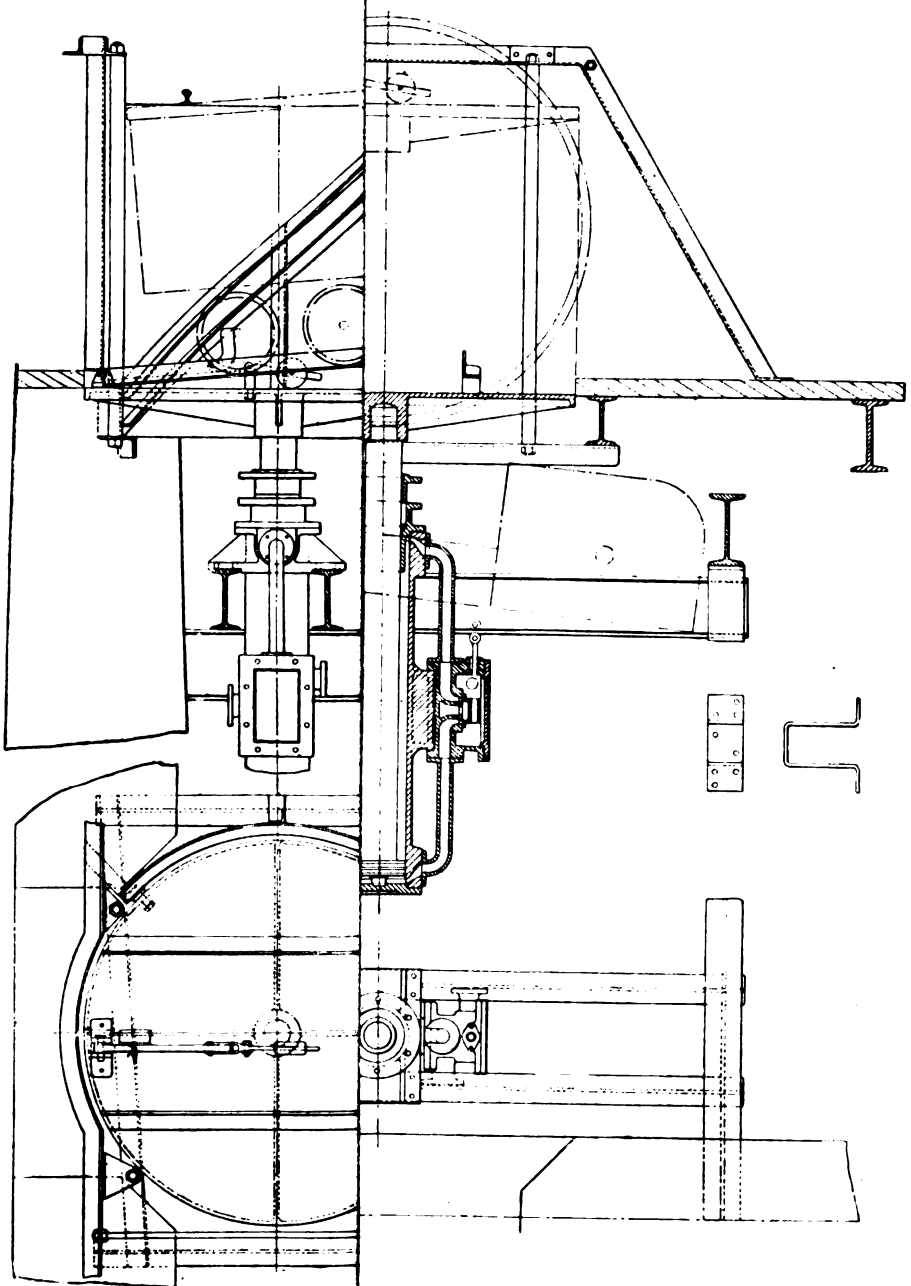

FIG. 641. FIG. 642.

D CO.

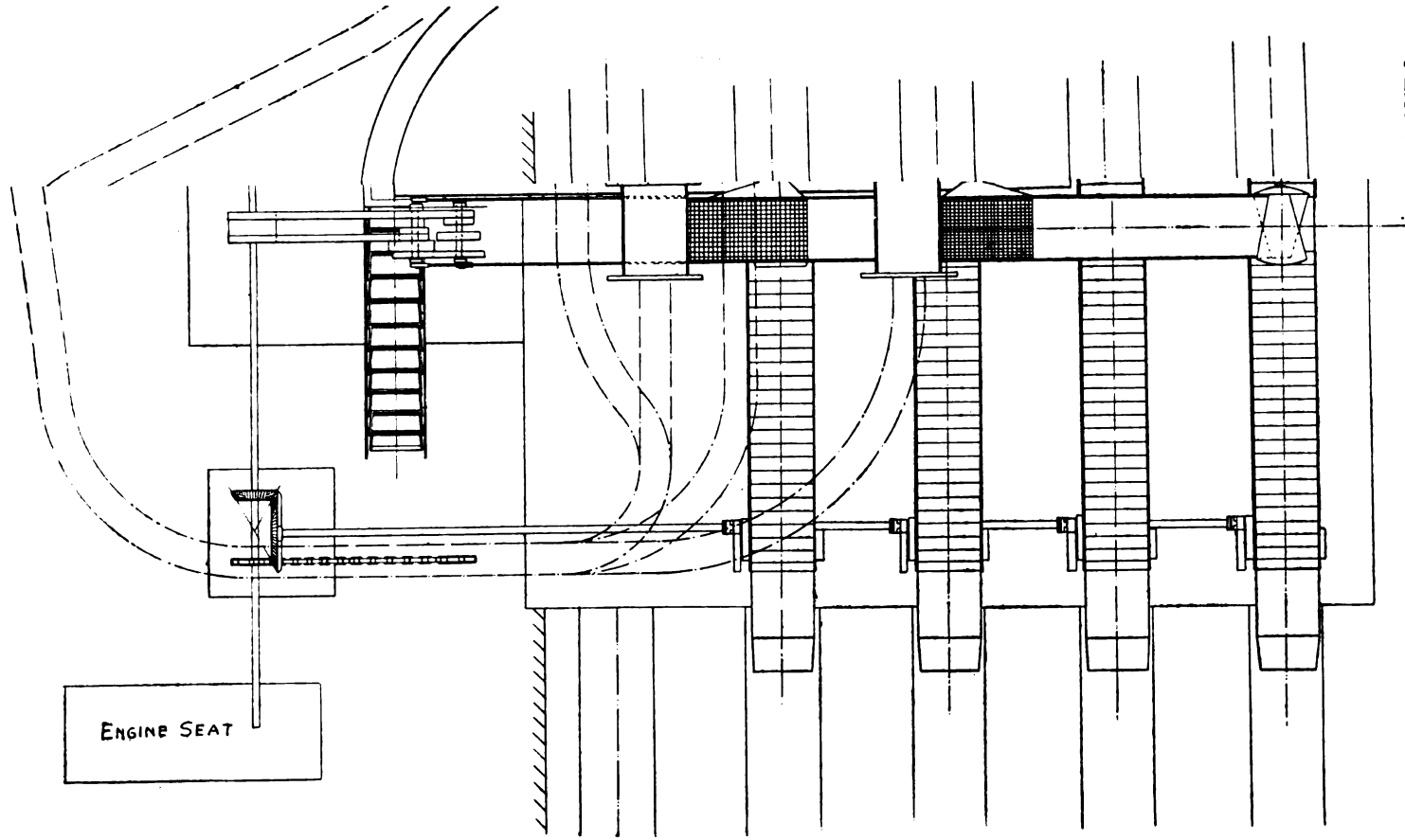

FIG. 643.—LEYCETT COLLIERY SCREENING PLANT—PLAN.

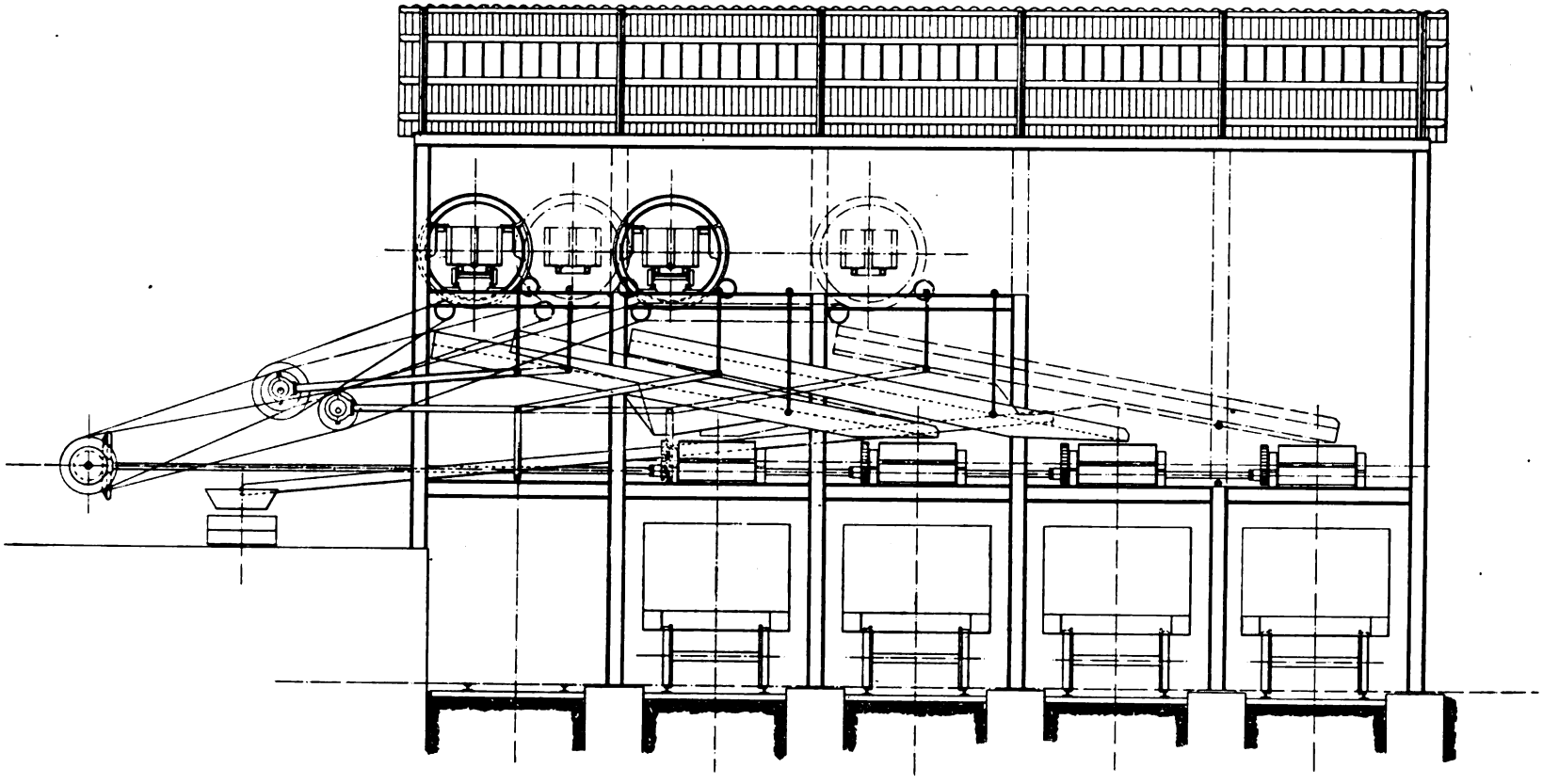

FIG. 644.—LEYCETT COLLIERY SCREENING PLANT.
Sectional End Elevation.

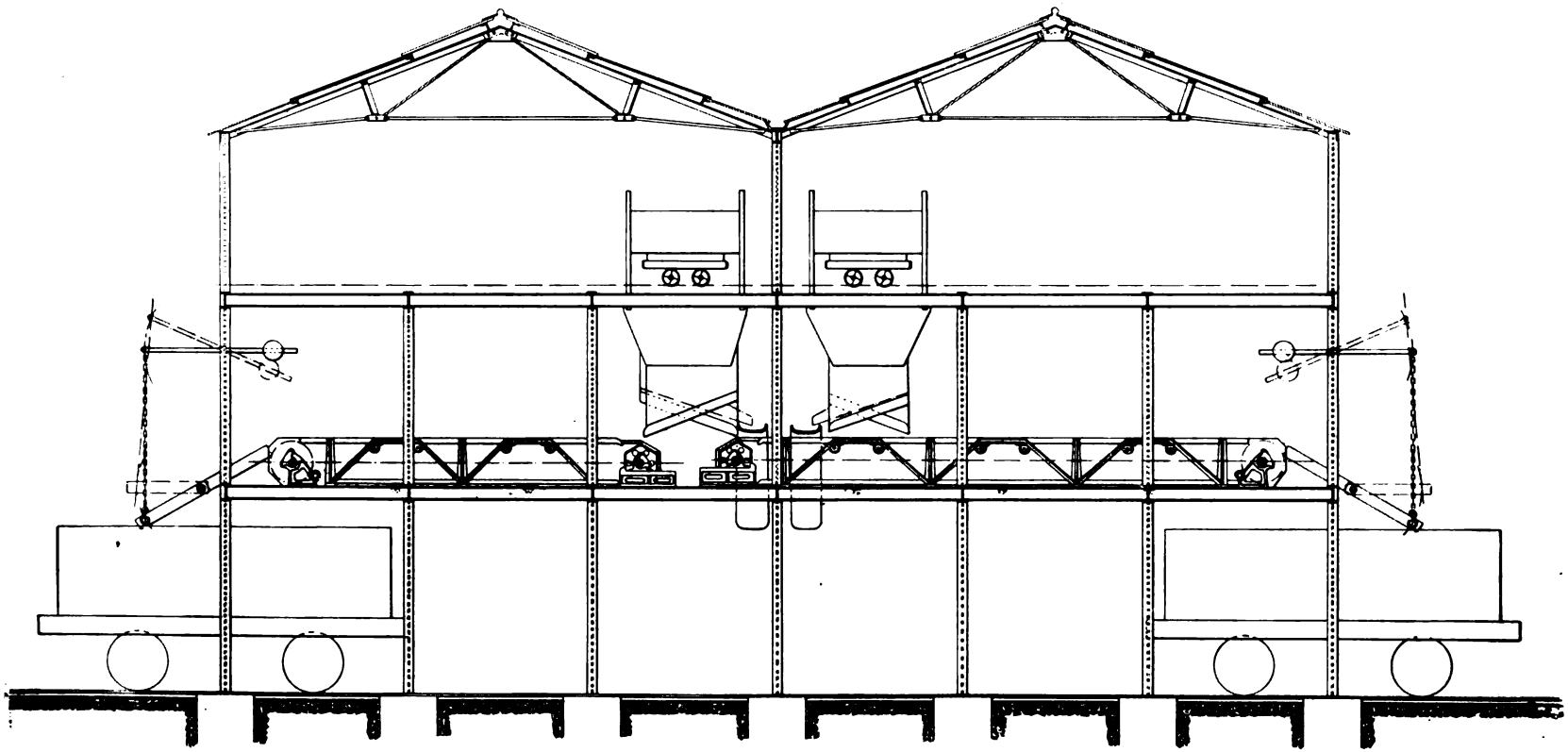

FIG. 645.—LEYCETT COLLIERY SCREENING PLANT.
Cross Section.

for instance, pieces of timber, picks, drills, or other gear, which are often sent up with the coal) prevent the belt moving, no damage can occur. The proportions of the constructive details are large, made accurately to gauge, and are interchangeable with each other—an important feature, reducing, as it does, the number of spare parts necessary to be stored.

Each jigging screen is at right-angles to the belt, and the usual way of delivering the coal is by continuing one side of the screen to the further side of the belt, the inner side being correspondingly shortened and cutting the plate connecting the two sides at an angle. The method adopted by Mr. Silvester, however, is somewhat novel, and consists of forming a dished inclined plane at the end of the screen plate—similar, in fact, to a weighing machine "scoop." As the motion of the screen shakes the coal into the scoop, it rolls from one side to the other, but in a zig-zag fashion, and finally reaches the edge of the scoop and rolls or drops gently upon the belt.

The housing consists of a steel girder frame, the columns carrying the transverse girders resting upon concrete block foundations, the floor girders being carried upon the flanges of the transverse girders. The roof is divided into two bays or spans, the principals being constructed of mild steel T-bars and angle bar struts, tied together with round bar tie-rods. The lighting is effected by means of skylights.

The objection to arranging one set of rails under two belts, as at Madeley, is the difficulty of feeding in the empty wagons, unless the two loading points are sufficiently far apart to allow of standage for empty and full trucks to keep both belts going—unless (which seldom happens) the loading is equal in time at both points. Otherwise, if the upper wagon is filled, and the lower is just commencing to fill, it is easily seen that vexatious delays may occur. For this reason the better plan is to arrange a separate road for each belt, or point of loading. This is the arrangement adopted at Broomhill Colliery, as will be seen from fig. 645A, which shows a plan of the heapstead and screening plant. The heapstead is supported on cast iron columns, resting on concrete foundation walls which run the whole length of the building, and with a set of rails between each row of columns. Transverse girders bolted to brackets cast on the columns carry the machinery and floors. The upper part of the heapstead at the flatsheet level contains three power-driven tipplers, weighing machine, and two creeper chains, besides the offices and token cabins. Underneath this, and at the same level as the picking belt floor, is the shafting and gearing for driving the plant. The tubs gravitate from the shaft to the turntable weighing machine, from which they are directed towards either of the tipplers, and from the tipplers they gravitate to the creepers, which raise them high enough to allow them to run back to the shaft. A pair of points near the shaft worked by a boy controls the supply of tubs to either cage.

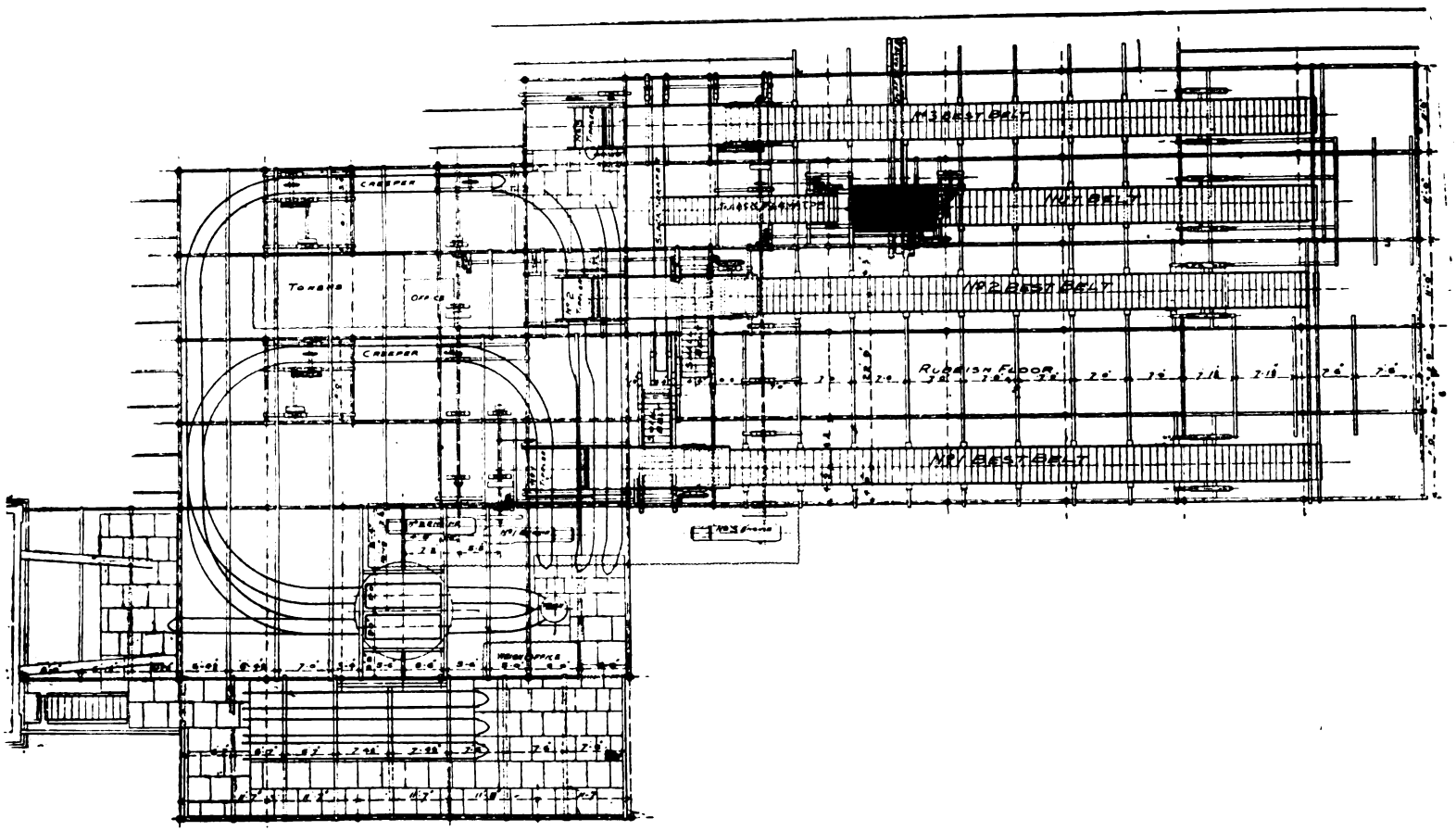

FIG. 645A.—BROOMHILL SCREENING PLANT.
Plan.

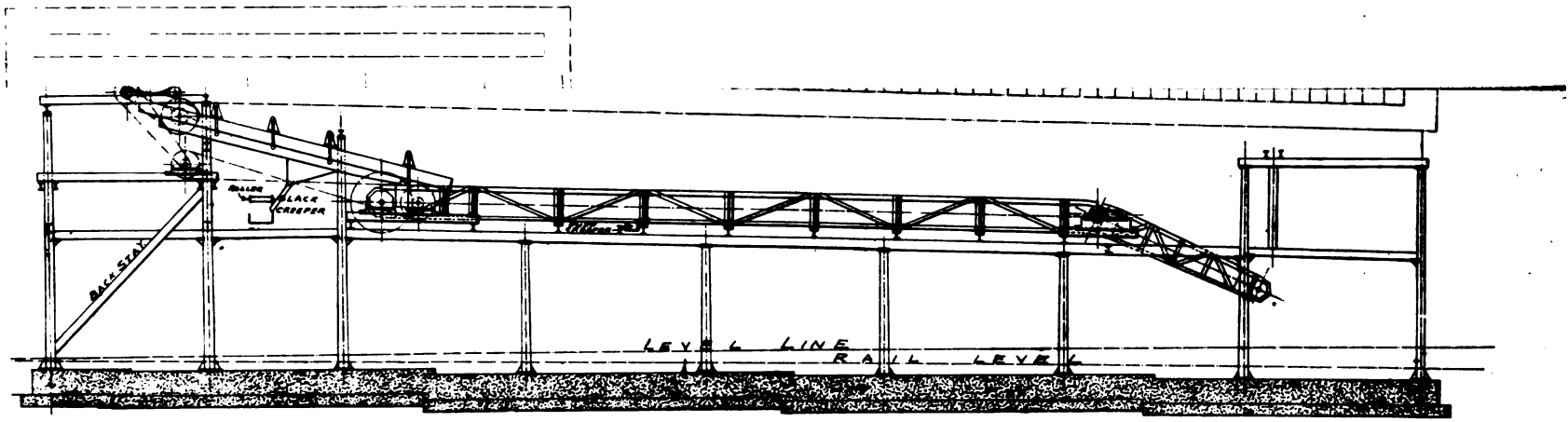

FIG. 649.—BROOMHILL SCREENING PLANT.
Section through No. 3. Belt.

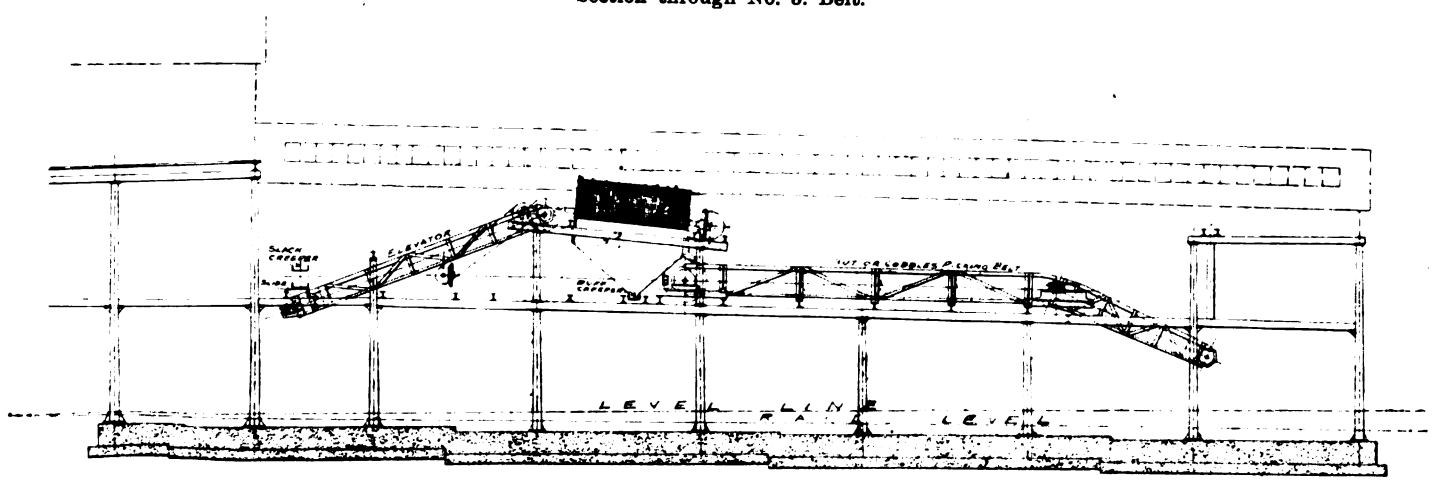

FIG. 650.—BROOMHILL SCREENING PLANT.
Section through "Nut" Belt.

PLATE LIII.—(*To face page 325.*)

The three "best" coal belts, together with the tippler, jigging screen, and small coal cross-belt in connection with them, are separately driven by an engine, there being thus three small engines in the engine room, as shown. There are, however, only two creepers, and the No. 2 creeper is arranged so that it may be driven by either No. 2 or No. 3 engine by means of friction clutches.

The screening plant consists of three jigging screens, three best coal picking belts, one nut belt, two small coal cross-belts, one small coal conveyor, one duff coal conveyor and one revolving screen. The classes of coal that can be dealt with are as per table (3), (6), (8), (9) and (10), or in connection with the washing plant, classes (4), (5), (6) and (7) may be added.

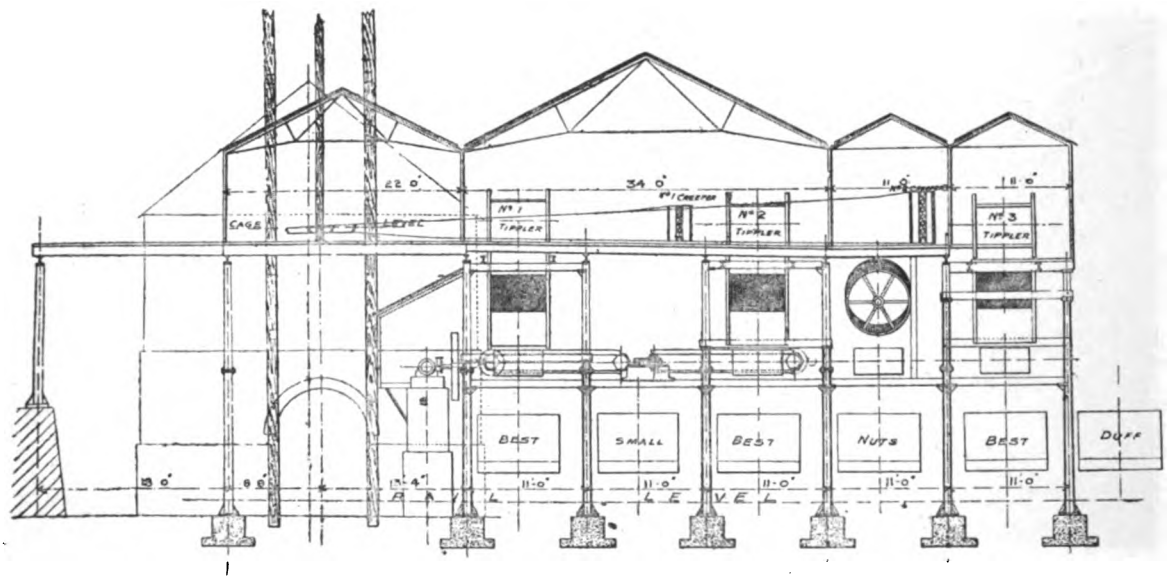

FIG. 646.—BROOMHILL SCREENING PLANT.
Cross Section.

The stones and dirt from Nos. 1 and 2 belts are heaped on the rubbish floor, which is provided with three trapdoors, under which wagons are run at intervals on the "small coal" road. The rubbish from No. 3 belt is also collected upon the floor, and filled into wagons upon the "duff" road through a series of hopper shoots in the side of the building.

Fig. 646 shows a cross section through the heapsteads, and figs. 647, 648 and 649 longitudinal sections through Nos. 1, 2 and 3 belts respectively, whilst fig. 650 shows a section through the elevator, revolving screen and nut belt. The elevator consists of a plate belt of similar construction to the picking belts. The coal from

No. 1 jigging screen is separated into "best" and "small," or may be arranged—in a manner to be shown shortly—to deliver all the coal on to the picking belt, or, in other words, to make "unscreened." When separating, however, the small is delivered to a short cross-belt at right angles to the "best" belt, and delivers the small coal into a truck on the small road, as shown. The No. 2 jigging screen is arranged in a similar manner, the small belt delivering the coal into the same wagon as No. 1, but is also arranged to deliver the small coal into the "slack" creeper, as shown. No. 3 belt is constructed likewise, but the small coal is all delivered into the slack creeper. This creeper consists of an endless chain of links, working in two troughs one above the other, and any coal falling into the trough is conveyed in the direction the links are moving. As the drums driving the chain always turn in the same direction, it is obvious the chain in the top trough will move in the opposite direction to the chain in the lower; hence, supposing the coal from No. 3 belt to fall into the lower trough, and the chain to be moving from the screen to the "small" coal delivery, the coal will be loaded into the same truck as that from Nos. 1 and 2 "small" belts. As the chain returns in the upper trough, any coal delivered into this trough will be conveyed towards No. 3 screen; the trough, however, ends at the elevator, and thus if the small coal from No. 2 screen be delivered into the top trough, it is conveyed to the elevator and thence to the revolving screen for further separation. The lower trough is fitted with a slide immediately over the elevator, which when drawn allows the coal from No. 3 screen to fall upon the elevator so that all the coal from Nos. 2 and 3 screens may be further separated into nuts and duff. Or if the screens are fitted with plates having large holes, all the coal passing through the revolving screen and loaded through the "duff" creeper will be taken for further treatment in the washing plant. Each loading road is independent of the other, and therefore the loading may proceed at different rates without causing a "block." The trucks gravitate under the screens, the gradient being about 1 in 70 for the empty trucks, and 1 in 80 for the full ones. The roads all run into a single line leading over the weighbridge. All material to go down the pit is delivered on to the extension shown on the left in figs. 645 and 646, where the columns rest upon a wall. This extension joins the waste heap.

The heapstead building is supported upon cast-iron columns, details of which are shown in figs. 651 to 654, brackets being cast on to carry the longitudinal girders, to which the transverse girders are secured, by bolts through the flanges. The superstructure—details of two bays being shown in figs. 655, 656 and 657—above the floor level consists of $2\frac{1}{2}$ in. by $2\frac{1}{2}$ in. by $\frac{5}{8}$ in. vertical angle bars back to back, strengthened by a $\frac{1}{4}$ in. plate between, forming a foot—as shown in fig. 657—which is secured to the girders. To the top of the vertical angle bars are secured the roof

principals consisting of 3 in. by 3 in. by $\frac{3}{8}$ in. tee bars, with $2\frac{1}{2}$ in. by $2\frac{1}{2}$ in. by $\frac{3}{8}$ in. angle bar struts, tied together with 1 in. diameter tie-rods. Between the angle-bar standards are bolted $2\frac{1}{2}$ in. by $2\frac{1}{2}$ in. by $\frac{3}{8}$ in. horizontal angle bars, to which the galvanised corrugated sheet iron sides are secured by hook bolts, as shown in fig. 656. The floors are formed of 11 in. by 3 in. deals, "kyanised" to preserve them, and reduce the risk of fire. The deals are laid upon the transverse girders, and are secured to a 7 in. by $2\frac{1}{2}$ in. nailing joist as shown in the detail sketch in fig. 655. The nailing joist is held in place by the $\frac{5}{8}$ in. diameter bolt, which is inserted at intervals of about eight or ten deals, the intervening deals being nailed only. The lighting is effected by skylights, with the exception of the machinery floor under the tippler floor, which is lighted by side windows, with a sliding sash, which may be opened. A detail of these is shown in figs. 658 and 659.

A separate engine with 12 in. diameter cylinder by 24 in. stroke, supplied with steam at a pressure of 45 lb. per square inch, drives each set as before explained. These engines are supported on concrete pillars, as shown in fig. 646, and are protected by forming a house with corrugated sheet-iron roof and sides, the latter having windows arranged to open, the floor being of concrete formed by fixing one end of an angle bar into the pillar and supporting the other end by a strut. No. 3 engine drives the elevator, revolving screen and nut belt, but these may be thrown out of gear by clutches, leaving merely the jigging screen and best coal belt to be driven, or *vice versa*. The main shafts, $4\frac{1}{2}$ in. in diameter, revolve in bearings fixed to the transverse girders, and drive the counter shafts actuating the jigging screens and tub creepers by Dick's belting, the tipplers and backing rollers being driven by sprocket chain gearing.

The tub creepers consist of single and double malleable cast iron links, some of the single links being horns for catching the tub axles and are placed at intervals. The chain is carried upon rollers, wood packing faced with sheet iron being placed between the rollers to prevent the chain sagging. At the foot of the incline a V-shaped block is placed in front of, and partly over, the creeper chain to divert the tub coupling chain to one side, in order to prevent the horn catching the coupling chain instead of the axle.

The tippler is power-driven, and is shown in figs. 660 and 661. It consists of two cast iron rings secured together by angle bars and through bolts. Each ring is supported upon two rollers, the four rollers being keyed to two shafts, one being driven and the other free. The rings constantly rest upon the rollers keyed to the free shaft, but are clear of the rollers upon the driven shaft—which is constantly revolving—when the tippler is standing. A small bracket is bolted to each ring, which—as shown—is resting upon a hinged pawl with its free end turned up to prevent the bracket passing. This pawl is kept in the position shown

by a wedge, coupled to a short lever keyed upon a short shaft passing through the cast iron bracket, and having keyed to its outer end the hand lever. By moving the hand lever over to the left, the wedge is withdrawn, and the pawl allowed to fall, the tippler moving downwards with it until the rings rest upon the driven wheels, and the pawl falling far enough to allow the small bracket to pass, the friction between the rollers and rings causes the tippler to revolve. After the tippler has started, the hand lever is moved back, thus replacing the wedge and raising the pawl, which is then in position to receive the bracket. After turning for nearly a complete revolution, the bracket slides upon the pawl, and the rings are gradually raised from the driven rollers, the stored momentum of moving the tippler being sufficient to bring the bracket up to the stop at the end of the pawl. The lever works in a guide not shown in the drawing, and is provided with a catch—similar to a reversing lever—which drops into a notch in the sector of the guide to prevent the wedge accidentally slipping out through vibration and starting the tippler. The tub is kept in the tippler by angle bars over the wheels, and in order to allow for slight variations in the diameters and wear of the axle bearings, the angle bars are not rigidly fixed, but a little play is allowed by making the holes through which the bolts pass slightly elongated.

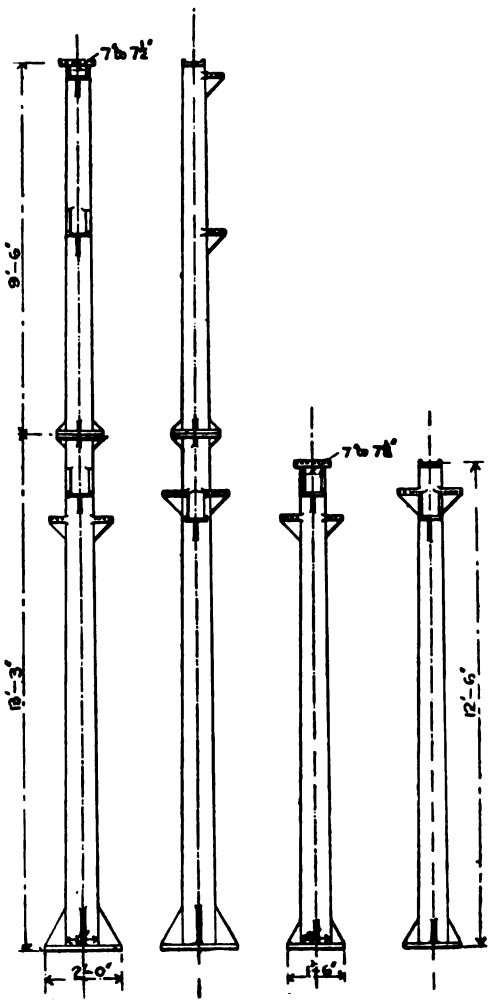

651. 652. 653. 654.

FIGS. 651 TO 654.—DETAILS OF CAST IRON COLUMNS (*see* page 326).

The coal from the tub is tipped into a shoot, as will be seen from figs. 662, 663 and 664 (Plate LIV.), which shows the No. 1 jigging screen in more detail. At the end of the shoot is a fluted backing or distributing roller which prevents the coal from falling or sliding too rapidly in a heap upon the screen. The coal backs up against the roller and is gradually carried over by it and distributed evenly upon

FIG. 655.

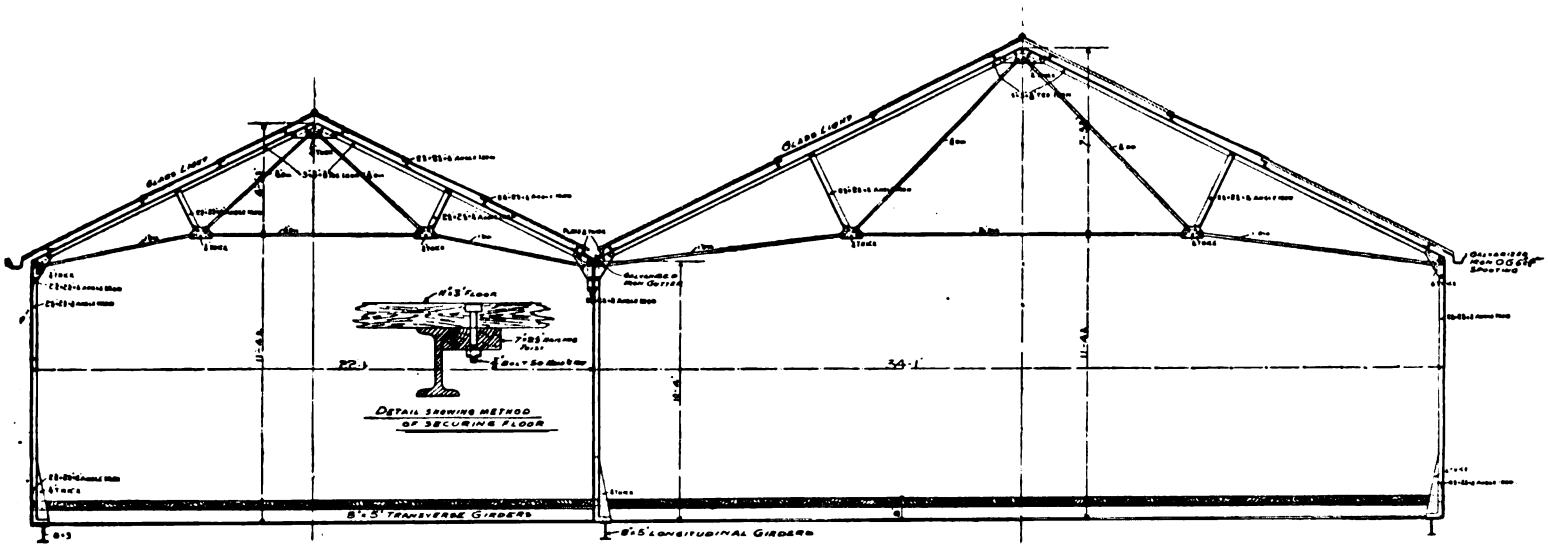

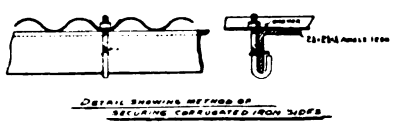

FIG. 656.

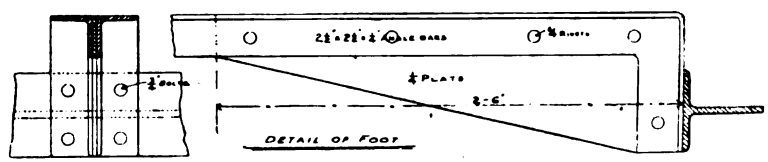

FIG. 657.

FIGS. 655 TO 657.—DETAILS OF ROOF, BROOMHILL SCREENING PLANT (*see* page 326).

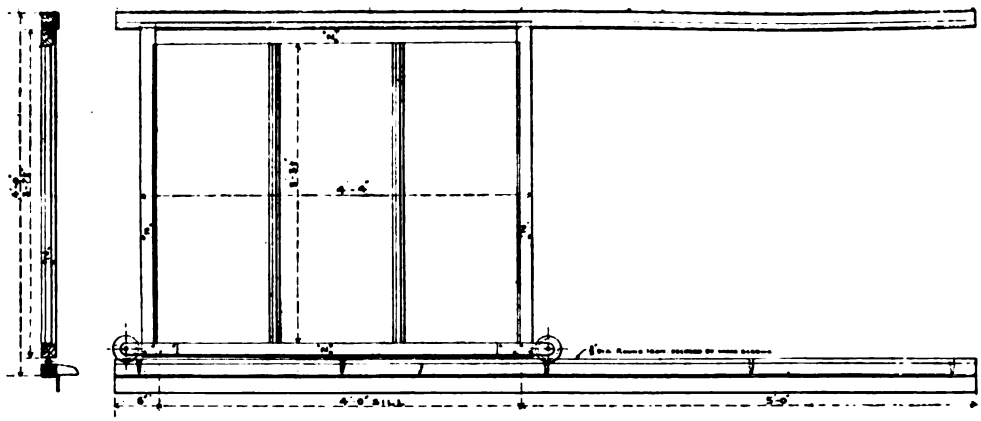

FIGS. 658 AND 659.—DETAIL OF WINDOW (*see* page 327).

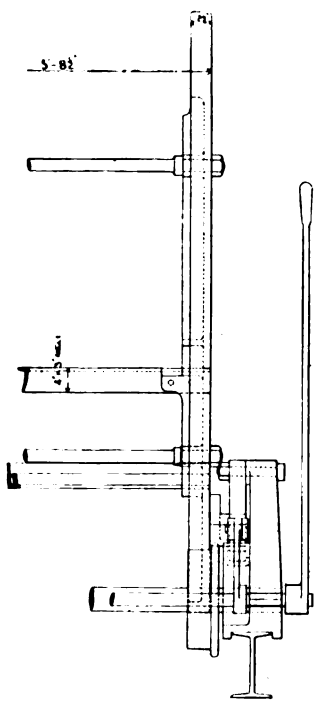

FIG. 660.

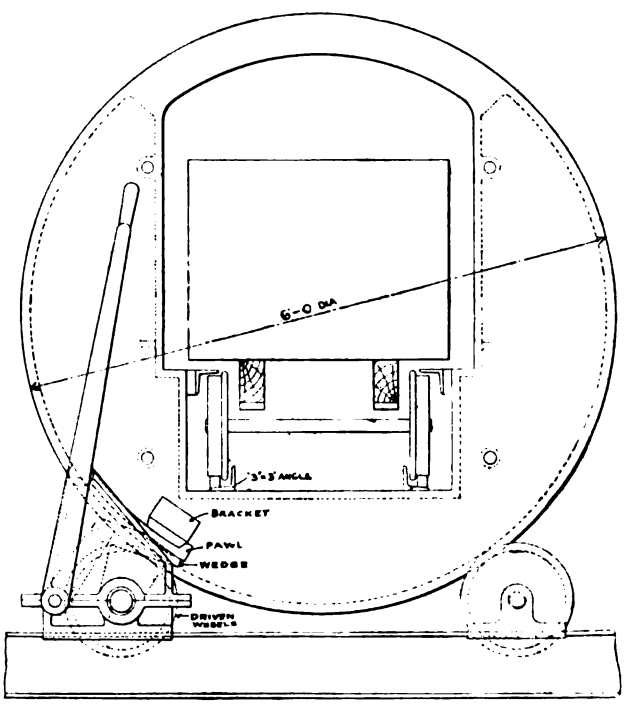

FIG. 661.

FIGS. 660 AND 661.—DETAIL OF TIPPLER (*see* page 327).

the vibrating perforated plate or wire gauze. The screen is built up of angle-bars and plates, as will be seen from the section shown in fig. 663, and is suspended by hangers from cast iron brackets fixed to channel bars, a detail of the hangers and brackets being shown in figs. 665 and 666, fig. 666 being an enlarged section through the screen. The screen vibrates between these channel bars, being driven by variable eccentrics from a countershaft at the back. The arrangement for making unscreened coal consists of the swing plate or trap, which in the position shown is closed for making unscreened, but, by pressing the lever downwards, the trap opens, and the small coal is then delivered upon the small coal belt. The No. 2 screen, which is shown in figs. 667 and 668—fig. 667 being a longitudinal section through the screen—is provided with two swing plates so as to divert the small coal on to either the main belt, small coal belt, or slack creeper. Details of the brackets A and B for securing the channel bars to the main girders are shown in figs. 669, 670, 671, and 672 and 673 respectively (Plate LV.).

The dimensions of the best coal-picking belts vary between 73 and 80 feet in length, but are all 4 ft. 6 in. wide. They are constructed of $\frac{3}{16}$ in. joggled steel plates riveted to three single and double link chains, details of which are shown in figs. 674 and 675. The plates move between longitudinal angle-bars, which are secured to cast iron standards bolted to the transverse girders as shown in figs. 676 and 677. The standards are tied together transversely by $1\frac{1}{4}$ in. diameter shouldered bars, and the frame is strengthened by 3 in. by $\frac{3}{8}$ in. flat diagonal bars as shown. To the angle-bars are secured the roller spindle bearings, the upper spindles each carrying three rollers to suit the chains, and each under spindle carrying two rollers to support the belt plates. Each plate is fitted with rubbing or wearing strips at the ends, on the upper side, to protect the edges of the plates from wearing on the bottom angle bar. The end of the belt forms a jib, which may be lowered into the truck. The arrangement is shown in figs. 678, 679 and 680, whilst figs. 681 and 682 show the detail of the winch for lowering or hoisting. The jib end is simply a continuation of the belt, the jib frame being secured to a strong shaft by means of strong angle bars and cast iron bearings, which forms a hinge upon which the jib moves. At the other end of the jib is the tail drum, revolving in bearings secured to vertical angle bars, and the whole jib is suspended by $1\frac{1}{4}$ in. diameter rods, forged with a single eye at the bottom, and flat at the top, which is bolted to a channel bar, at the centre of which is fixed the chain snatch pulley. Details of the attachment are shown in fig. 683. The winch consists of a barrel fixed in bearings bolted to the vertical steel joist and is driven by a 1-horse power electric motor through a train of spur gearing. The motor is controlled by a single lever starting and reversing switch, and is series wound, so that it is quickly lowered when running at full speed, and may be raised at various speeds. The

weight of the jib is nearly balanced by counter-balance weights as shown, the weight being in favour of the jib, so that it may be lowered when empty. The same arrangement of barrel and gearing may be worked by hand, in which case the crank handle is secured to a square on the end of the spindle carrying the spur wheel, which gears with the motor pinion. The latter is of raw hide, and both it and the spur wheel are machine cut. The whole winch and motor is enclosed in a wood case, on the outside of which is fixed the starting and cut-out switches.

The slack and duff coal creepers consist of a chain shaped as shown in fig. 684, sliding in a cast iron trough, as shown in the arrangement of duff creeper in figs. 685, 686 and 687. If the coal is merely to be conveyed in one direction, only one set of troughing is required, as in the arrangement shown. If, however, the creeper is to convey coal in two directions, then two sets of troughing are required, with a suitable arrangement of slide or trap door for the discharge of the coal. If the chain is not to work in troughs, rollers are provided to carry the returning chain. Details of the brackets for carrying two troughs are shown in figs. 688 and 689, and details of the duff creeper, trough, driving shaft with drums and roller for carrying the chain in, are shown in figs. 690 to 698.

As before stated, the stones and dirt from the picking belts are heaped upon the floor, which is provided with trap doors. These are shown in figs. 699, 700 and 701 (Plate LVIII.), and, as will be seen, consist of a pair of doors hinged to the underside of the floor, and balanced. The balance weights, however, are at right angles to the doors, and when in equilibrium the doors rest in a position at an angle of about 45 degs. with the floor, the two doors thus forming an angle of about 90 degs. with a small space between them, so that any large and heavy lumps thrown into the opening strike the doors with more or less force, and the fall into the truck is partly broken. The top of the doors is covered with $\frac{1}{4}$ in. steel plating. An eye-bolt is fixed to the end of each door, into which the attendant inserts a hook, and pulls up the door, which snecks automatically. The catches or snecks, as shown in detail in the small sketch in fig. 700, are constructed so that they always remain closed by gravity, and are coupled together by short toggle levers, which are operated by pulling down the lever working in a guide shown on the right. A pin keeps this lever in position when the doors are closed, to prevent the latter being opened accidentally.

The plant is capable of dealing easily with 2,000 tons in a day of eleven hours, and the following speeds and particulars will be of interest:—

Speed of best coal belts, 95 ft. per minute.

Speed of nut and small coal belts, 88 ft. per minute.

Speed of elevator belt, 75 ft. per minute.

PLATE LIV.—(*To face page 332*).

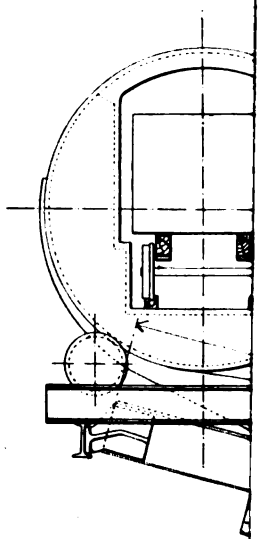

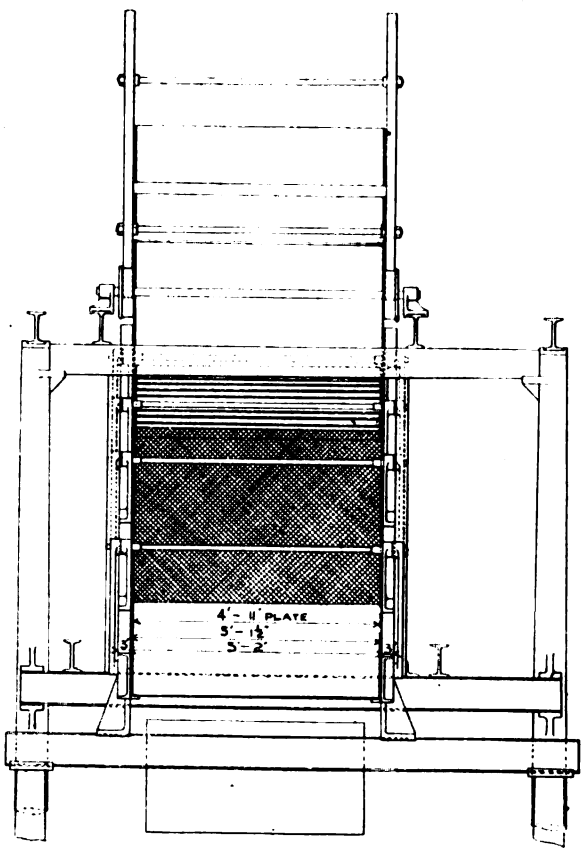

FIG. 664.—END VIEW OF NO. 1 JIGGING SCREEN.

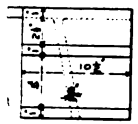

Detail of Bracket 'A'

FIGS. 669 TO 671.

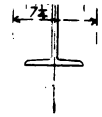

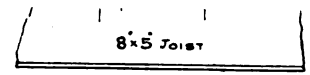

Detail of Bracket 'B'

FIGS. 672 AND 673.

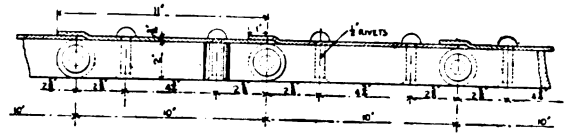

FIGS. 674 AND 675.—DETAILS OF BELT LINKS.

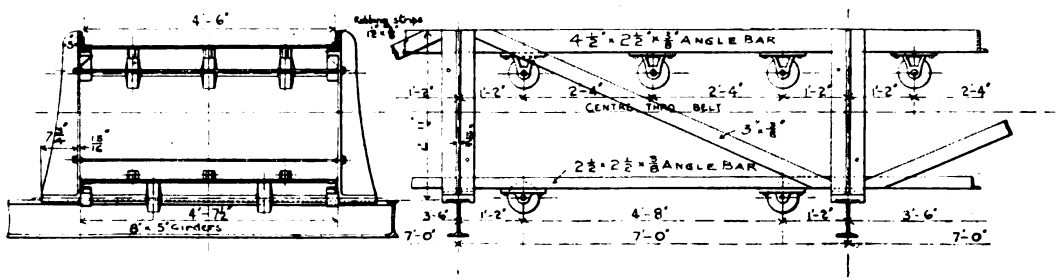

FIGS. 676 AND 677.—COAL CLEANING BELT.

Fig. 679.

Fig. 678.

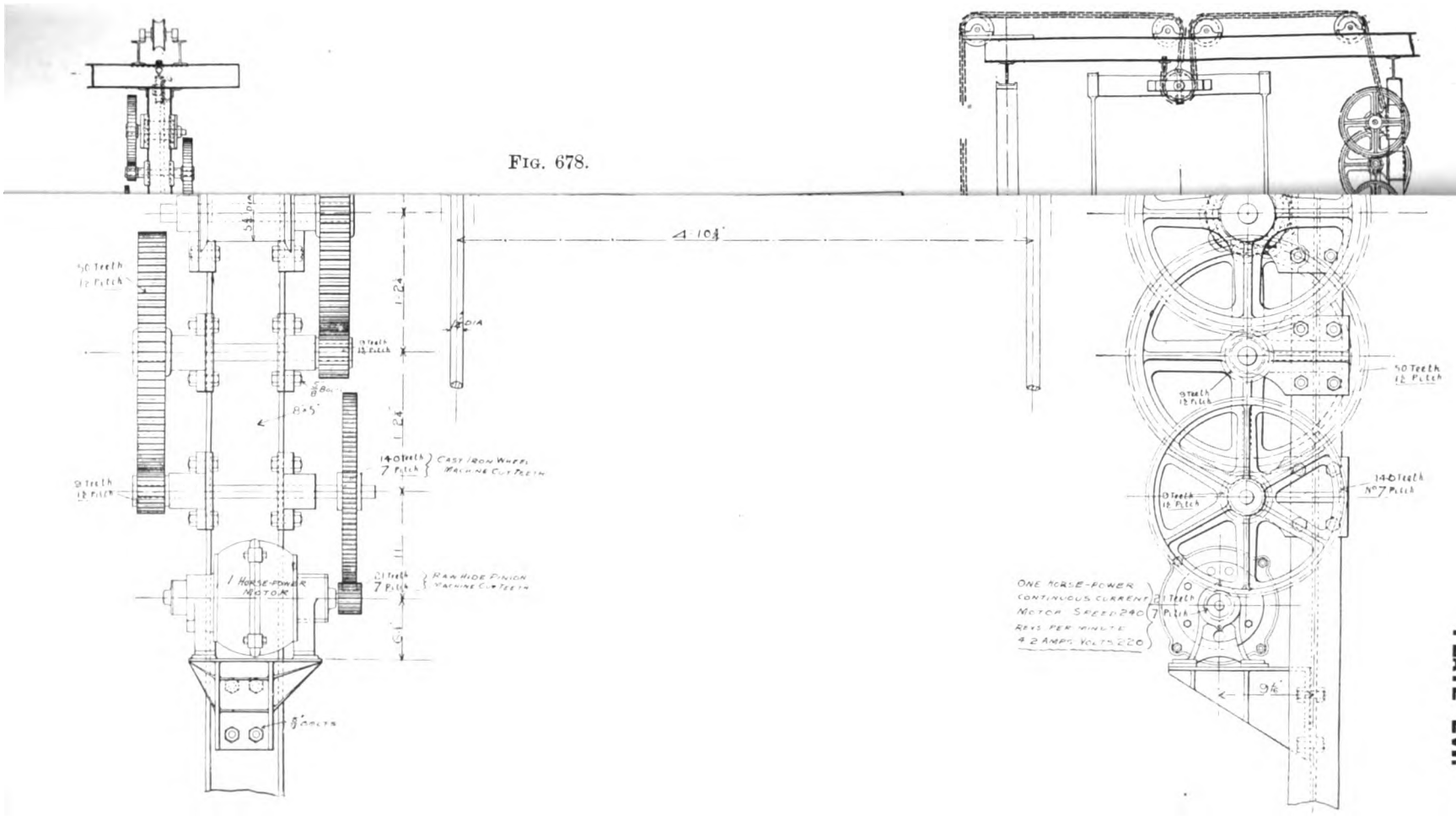
50 Teeth 12 Pitch
9 Teeth 12 Pitch
140 Teeth 7 Pitch
Cast Iron Wheel Machine Cut Teeth
21 Teeth 7 Pitch
Rawhide Pinion Machine Cut Teeth
1 Horse-power Motor
4' 10½"
1·24
1·24
50 Teeth 12 Pitch
140 Teeth No 7 Pitch
One Horse-power Continuous Current Motor. Speed 240 Revs per minute 4·2 Amps Volts 220
9½"

Fig. 681.

Fig. 682.

Figs. 681 and 682.—Detail of Winch for Raising and Lowering Jib End.

PLATE LVI.

CAST IRON STAND FOR SMALL CREEPER

SCALE 3'-1'-0"

FIGS. 688 AND 689.—DETAIL OF TROUGH STANDS.

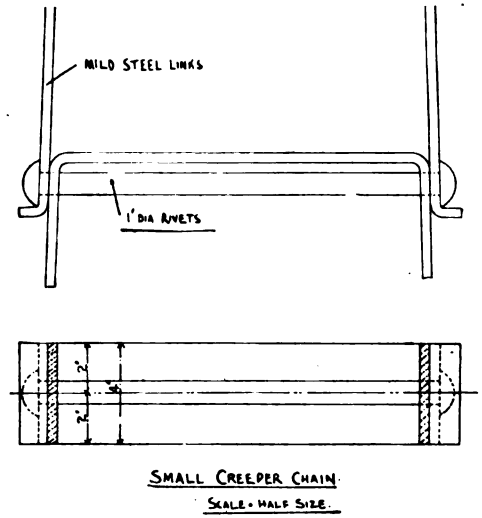

SMALL CREEPER CHAIN

SCALE - HALF SIZE.

FIG. 684.—DETAIL OF CREEPER CHAIN.

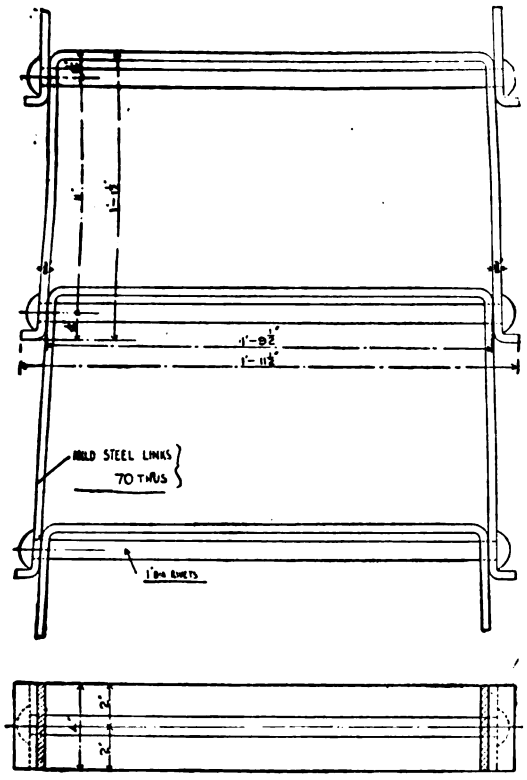

DUFF CREEPER CHAIN.

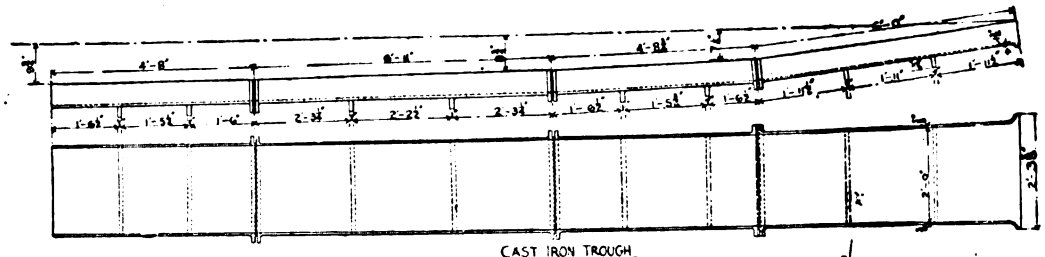

CAST IRON TROUGH

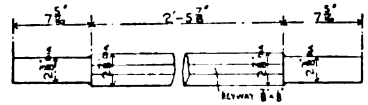

MILD STEEL SHAFT

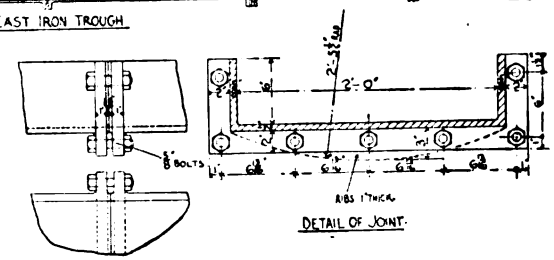

DETAIL OF JOINT.

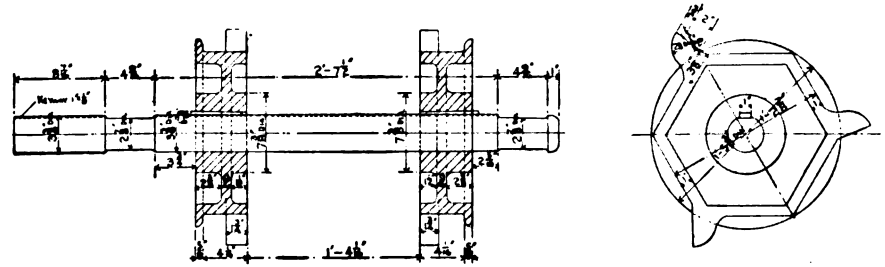

MILD STEEL SHAFT AND CAST IRON DRUM.

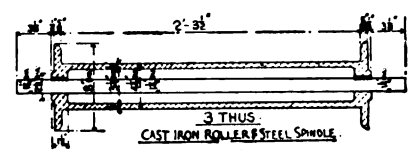

3 THUS.
CAST IRON ROLLER & STEEL SPINDLE.

FIGS. 690 TO 698.—DETAILS OF DUFF CREEPER.

Speed of duff creeper about 98 ft. per minute.

Speed of slack creeper, 114 ft. per minute.

Area of revolving screen, 184 square feet.

Diameter of revolving screen, 6 ft. by 10½ ft. long.

Revolutions of revolving screen, eight revolutions per minute.

Speed of tipplers, one revolution in eleven seconds.

Engines—Nos. 1 and 2, 70 revolutions per minute. No. 3, 80 revolutions per minute.

Jigging shafts, 102 revolutions per minute.

Travel of jigs—No. 1, 4¼ in., wire gauze.

No. 2, 3 in. } Perforated plates.
No. 3, 3½ in. }

Gradient of screens—No. 1, 9 in. per yard.

Nos. 2 and 3, 9½ in. per yard.

(The difference in the travel is due to the coal passing more easily over the perforated plates than over the wire gauze, more than to the difference in the gradients.)

Speed of fluted backing roller, 9 revolutions per minute.

Speed of tub creepers, 52 ft. per minute.

Messrs. the New Conveyor Company Limited have been kind enough to supply drawings of the three following examples of heapsteads and screening plant. Figs. 702, 703 and 704 (Plate LIX.) show in elevation, end elevation and plan respectively, the coal-cleaning plant at the Fochri pit, the property of the Dowlais Iron Company. The plant consists of one tub creeper chain, two tipplers, and two best coal picking belts, and one small coal belt. The full tubs from the shaft are delivered to the foot of the creeper elevator, which raises them high enough to allow them to run to the tipplers. These consist of two cast steel rings of angle section, 8 ft. 6 in. in diameter, secured together with 5 in. by 5 in. by ½ in. angle bars, the sides being formed of ½ in. plates. The tubs, which weigh 35 cwt. each, are held in position by 4½ in. by 4½ in. angle bar guide rails over the wheels. As in South Wales, the custom is to heap the coal above the height of the tub, the tipplers are provided with a door at the entering end, the other end being closed with a fixed plate; the door—which is hinged at the top—and the fixed plate extend downwards to a little above the height of the tub, so that when empty it will pass out under the fixed end plate. These prevent the coal spilling whilst being tipped.

The coal is delivered from the tippler on to a fixed bar screen, down which the coal slides, the small falling through the spaces between the bars into a "Billy Fairplay" box. The best coal passes on to a short jigging screen, or rather plate,

which jigs the coal on to the picking belt in small quantities, evenly and regularly, and is conveyed by the belt to the truck. The "Billy Fairplay" box, which is seen under the screen in fig. 702, is suspended from a Salter's spring balance with 24 in. diameter dial, graduated into 3 lb. divisions up to 15 cwt. The small coal falls into this box, and after the weight has been recorded, the checkweighman pulls a lever, which discharges the coals by means of a shoot on to a conveyor, which delivers the coals to the small coal belt, running parallel with the best coal picking belts, which conveys it to the trucks. The miners are not paid for the small coal, which is an inducement for them to make and fill as little as possible. The fixed bar screens are 15 ft. 6 in. long by 6 ft. wide, and set at an inclination of 6 in. per foot. The side plates are 21 in. deep at the top, tapered to 15 in. at the bottom by $\frac{1}{2}$ in. thick, with a 2 in. by $\frac{1}{2}$ in. beading round the top of the plate. The screen bars are in one length of 12 ft., and 3 in. deep by $\frac{3}{4}$ in. at top, tapering to $\frac{5}{8}$ in., threaded on four 1 in. diameter bars, with tapered washers between to form $1\frac{1}{8}$ in. mesh. The bars are supported at each end by 3 in. by 3 in. by $\frac{1}{2}$ in. double angle bars, riveted back to back and to the $\frac{3}{8}$ in. dead plates at the ends of the bars. The jiggers are 7 ft. long by 7 ft. wide at the top, tapering to 4 ft. 5 in. wide at the bottom. They are suspended by four hangers, and are driven by two eccentrics, the stroke being 8 in.

The picking belts are each 52 ft. long centre to centre of drums, of which 15 ft. forms a swing jib, leaving 37 ft. as the fixed portion, by 5 ft. in width. The belt ends are carried on 6 in. diameter shafts, 6 ft. 3 in. long, except the driving ends, which are 8 ft. 6 in. long to take the gearing. The belt plates are $\frac{5}{16}$ in. thick by 5 ft. wide, secured to three chains, constructed of cast steel links of the single-eye and double-eye type. The plates are all planed on one edge, and bent over to fit the rounded end of the links, the other planed edge being bevelled to form a close joint with the curved edge of the preceding plate, as shown in fig. 709. On every second plate are fixed two pieces of angle iron, 2 in. by 2 in. by $\frac{1}{4}$ in. by 15 in. long, to prevent the coal sliding too quickly off the jib end of the belt when lowered right down into the truck. The belts travel between angle bars at the top and bottom, secured to cast iron standards bolted to a 5 in. by 3 in. longitudinal channel bar, and are supported upon intermediate cast iron rollers 9 in. in diameter by 4 in. wide, keyed, in a position to revolve under the chains, to a $2\frac{1}{2}$ in. diameter shaft, with 2 in. diameter journals revolving in cast iron bearings secured to the longitudinal angle bars, and spaced 4 ft. apart; the rollers at the underside of belt being spaced 8 ft. apart, the bearings resting upon the channel bars. The standards are braced transversely by 2 in. by 2 in. by $\frac{3}{8}$ in. crossed angle bars. Details showing the construction of similar belts are shown in figs. 705 to 714, the only difference being in the shafts, which are 4 in. diameter instead of 6 in., and 6 ft. long instead of 6 ft. 3 in.

The jib is raised and lowered by mitre gearing driven by shafting from the engine, a clutch engaging either mitre wheel on the driven shaft with the wheel on the chain-drum shaft; the jibs are balanced as shown in fig. 702.

The construction of the building is interesting, and somewhat novel, inasmuch as ordinary flat-bottom steel rails are principally used. The columns consist of four steel rails, arranged two and two parallel to each other, so that the flanges are on the outside, the tops of the rails coming together. Each set of four is secured at the top and bottom in a special cast iron head and foot, the longitudinal rails forming the wall plate to carry the roof resting on these heads. On the side which carries the shafting for actuating the jib ends of the belts, other rails—bent diagonally for about two-thirds of the distance between the floor level and wall plate, when they meet and are continued vertically to the wall plate, as shown in fig. 702, where they end in a similar cast iron head to the columns—act as braces and support the shafting. The flanges of the rails presenting a plain surface, angle-bar brackets may be riveted to them for supporting the transverse steel joists. The longitudinal rails carrying the flooring rest upon these. A rigid and substantial structure is thus erected at a minimum of expense, as in all probability the rails, which may be old or unsaleable, may be bought at a much less price per ton than girders. Even assuming the total cost of construction is the same on account of the extra weight in the rails, the latter is more of an advantage than otherwise, as there will be more mass to absorb the vibration of the jigging screens.

Figs. 715 and 716 show, in elevation and plan respectively, a similar arrangement at Aberaman Colliery to the foregoing, with the exception that the small coal belt is arranged diagonally, so that the small coal may be delivered directly on to it from the Billy boxes, and that the plant consists of three tipplers and picking belts.

The best coal picking belts travel at the rate of 50 ft. per minute, and the small coal belt 37·35 ft. per minute, the tipplers being arranged to empty six tubs per minute each.

Another arrangement, that of Cwm Neol Colliery, is shown in figs. 717, 718 and 719, but in this case the jigging screens are fitted with bars and shoots, to further separate the small coal which is discharged on to the diagonal small coal belt. The small coal is conveyed to an elevator pit, from which it is raised to a circular revolving screen, which separates the cobbles and nuts from the small. This arrangement is shown in elevation in fig. 719. Each class of coal is discharged into bunkers, from which the wagons are filled as required.

Figs. 720 to 724 show the general arrangement of the return gangway in connection with this heapstead, which is constructed from steel joists and wood flooring, details of which are shown in figs. 722, 723 and 724. The tub creeper consists of

PLATE LVIII.—*(To face page 336).*

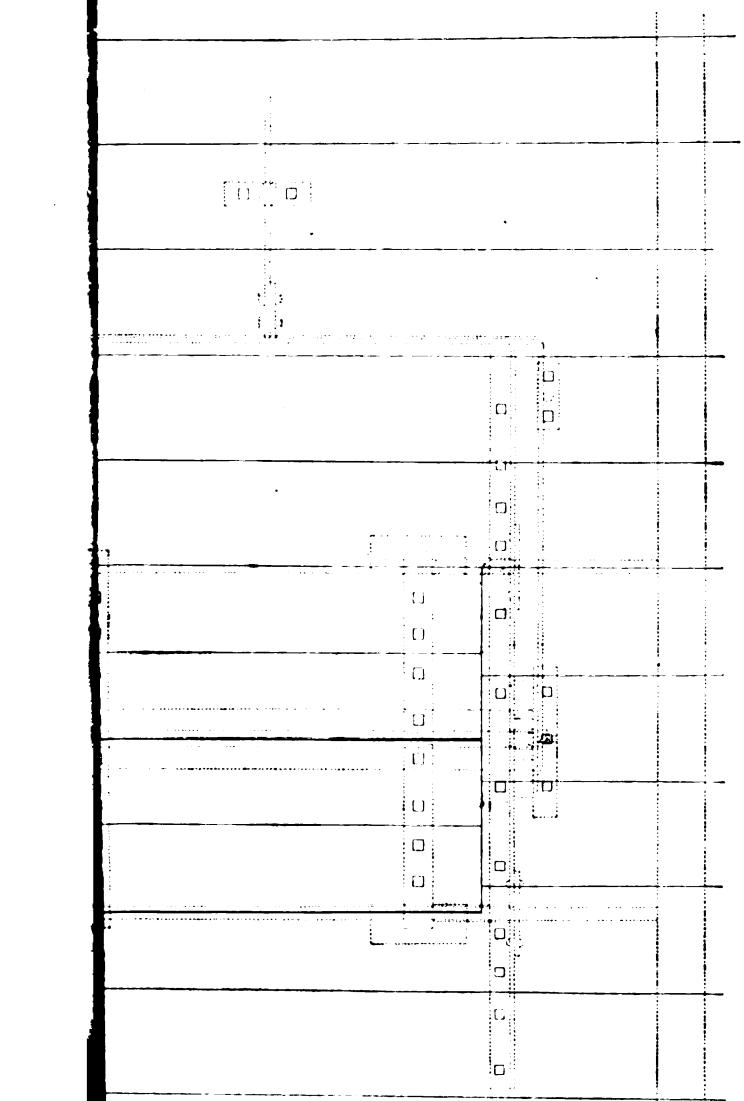

FIG. 701.—TRAP DOOR FOR DISCHARGE OF DEBRIS.—*(See p. 332.)*

FIG. 703.

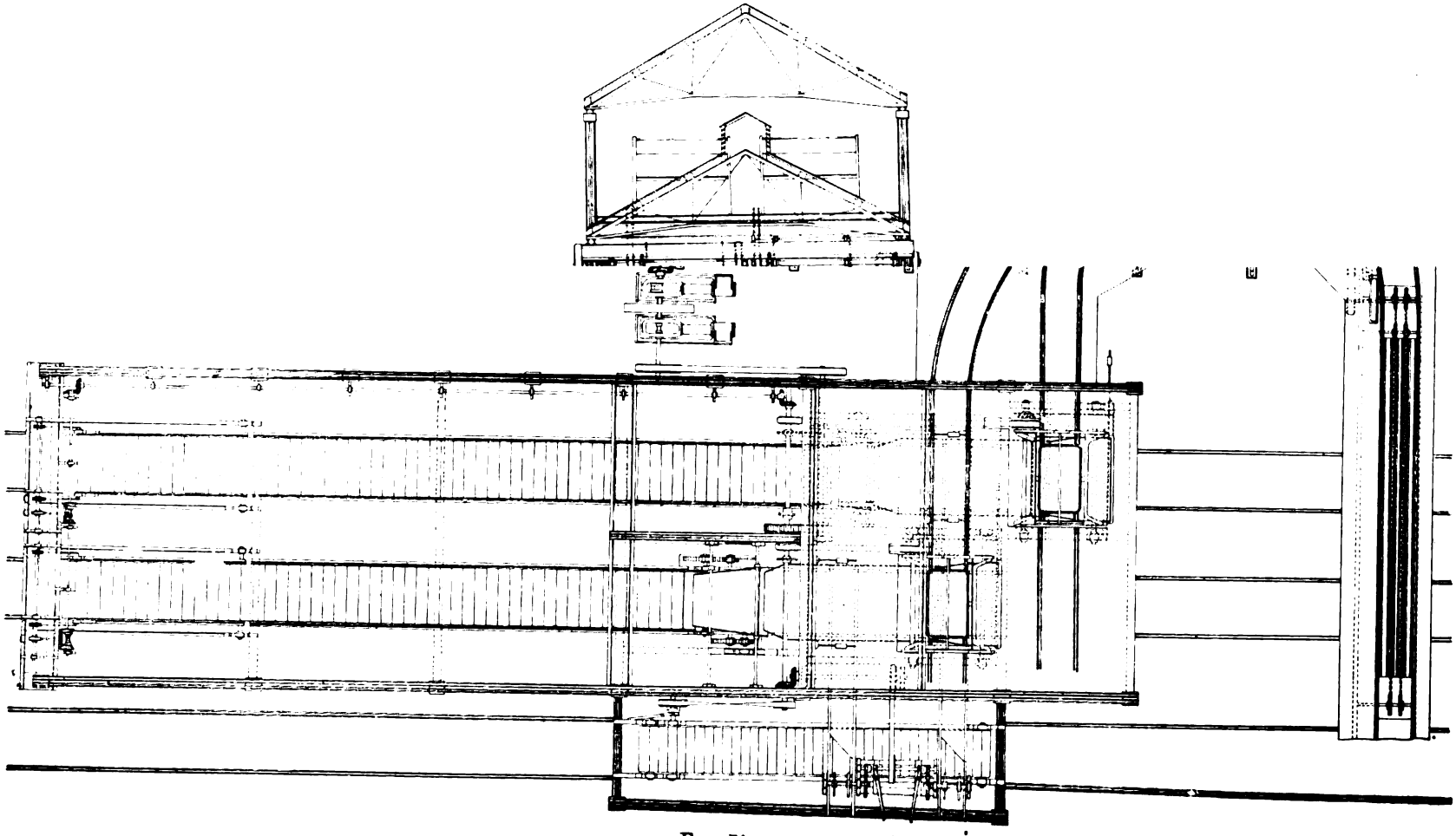

FIG. 704.

FIGS. 702 TO 704.—GENERAL ARRANGEMENT OF SCREENING PLANT, FOCHRI COLLIERY.—(*See* p. 334).

(Scale—1 in. = 15 ft.)

PLATE LX.

FIG. 706.

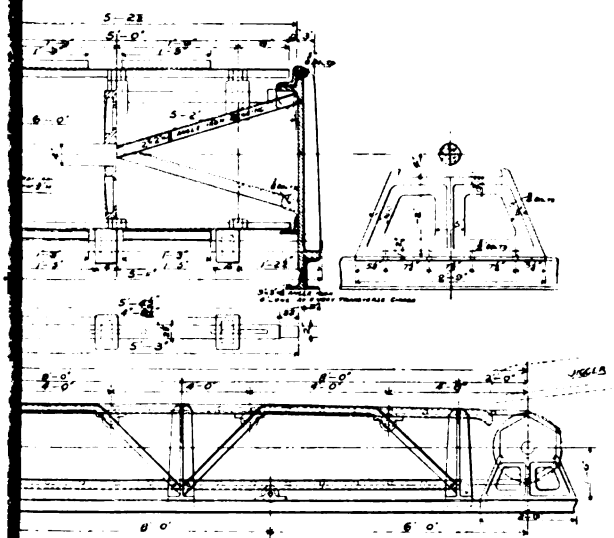

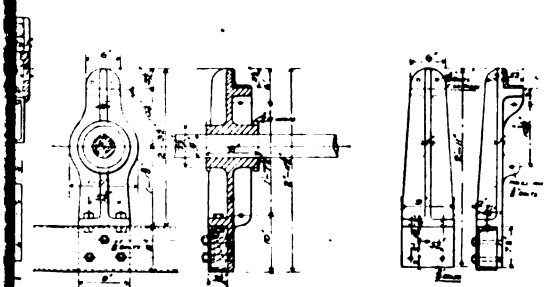

FIG. 714.

FIGS. 712 AND 713.

G BELTS.

FIG. 715.

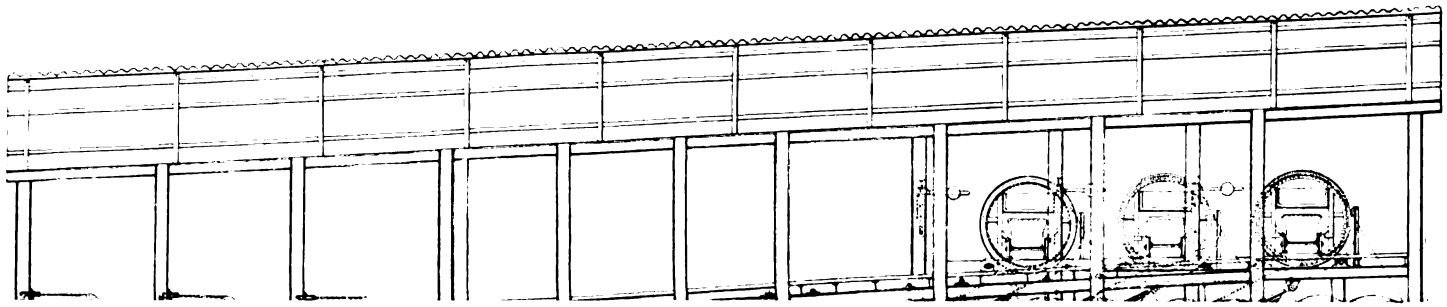

FIGS. 715 AND 716.—GENERAL ARRANGEMENT OF SCREENING PLANT, ABERAMAN COLLIERY.

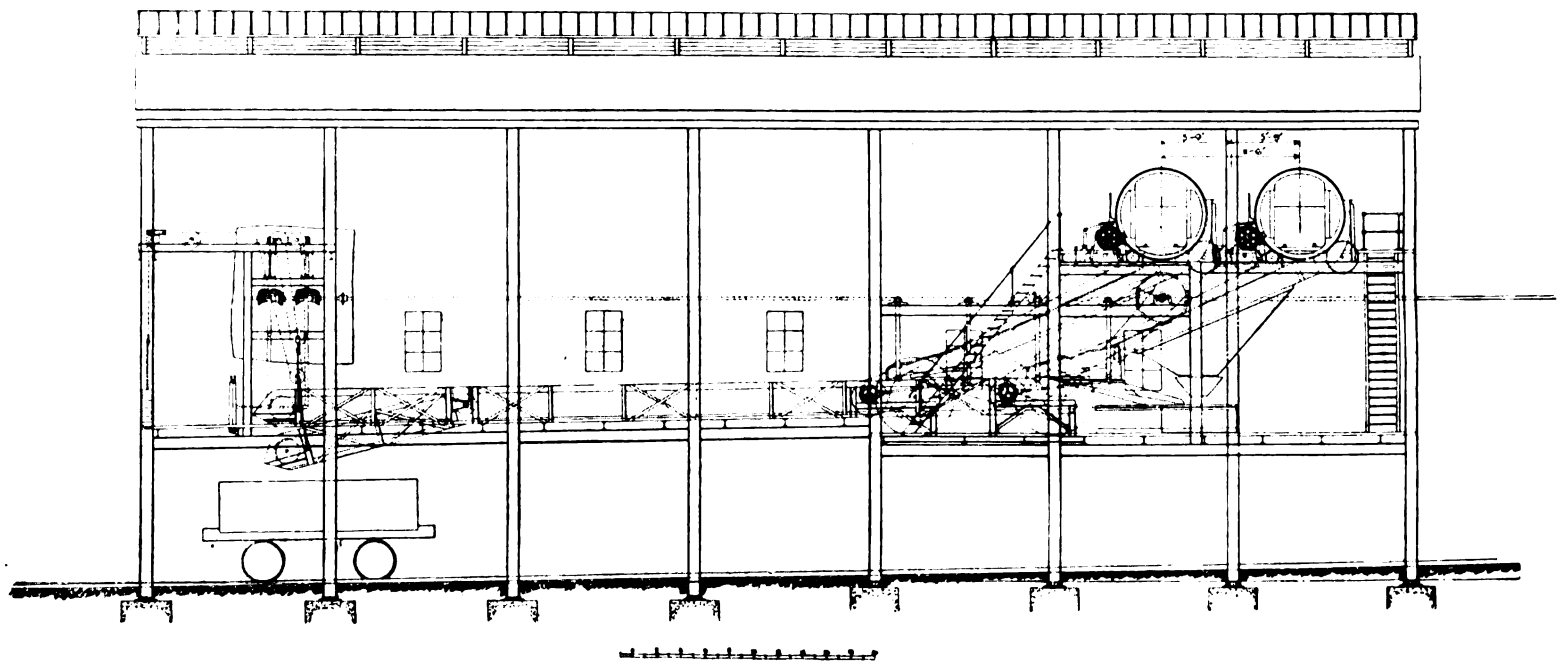

FIG. 717.—ELEVATION OF CWM NEOL COLLIERY SCREENING PLANT.

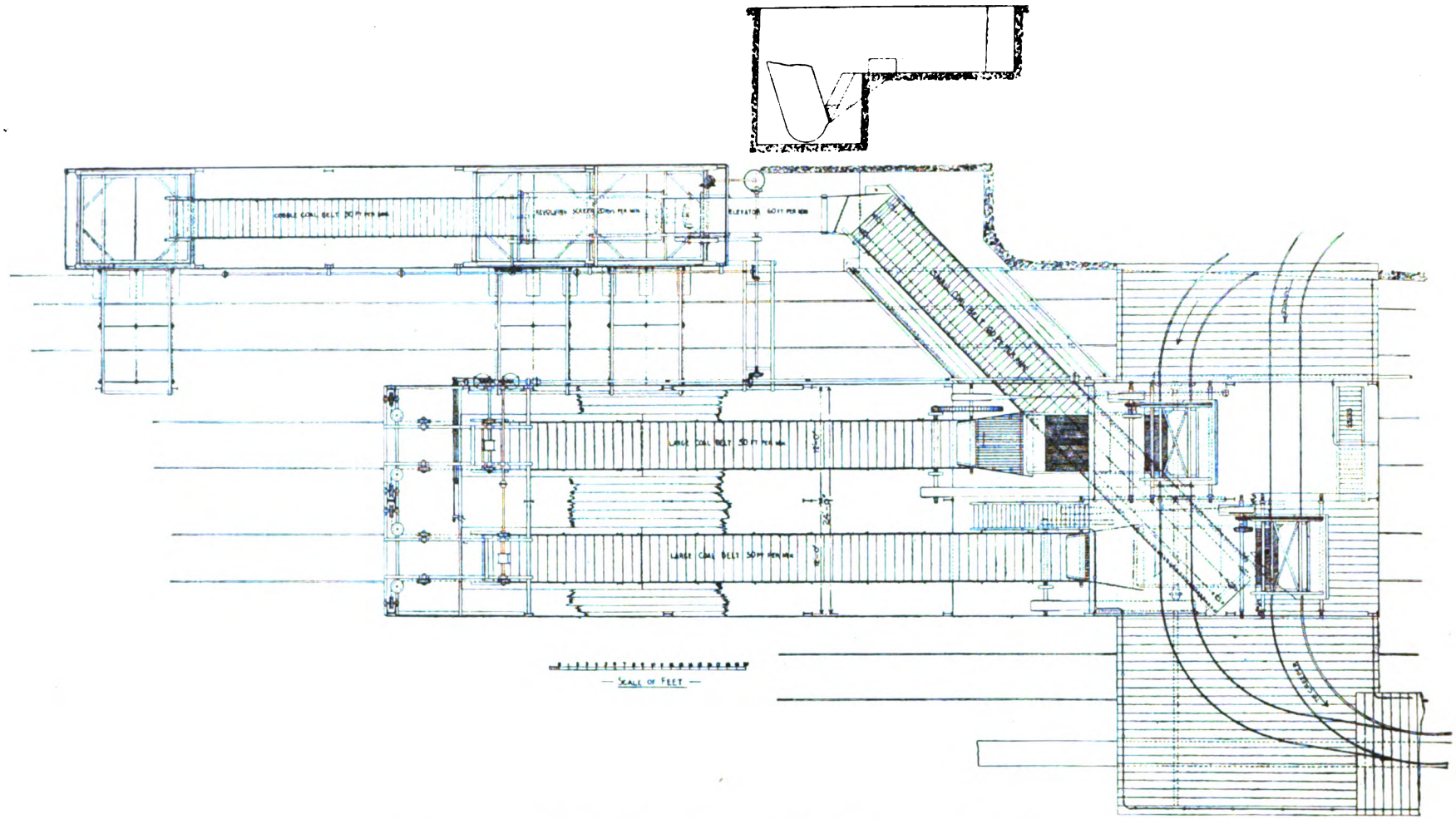

FIG. 718.—PLAN OF CWM NEOL COLLIERY COAL SCREENING PLANT.

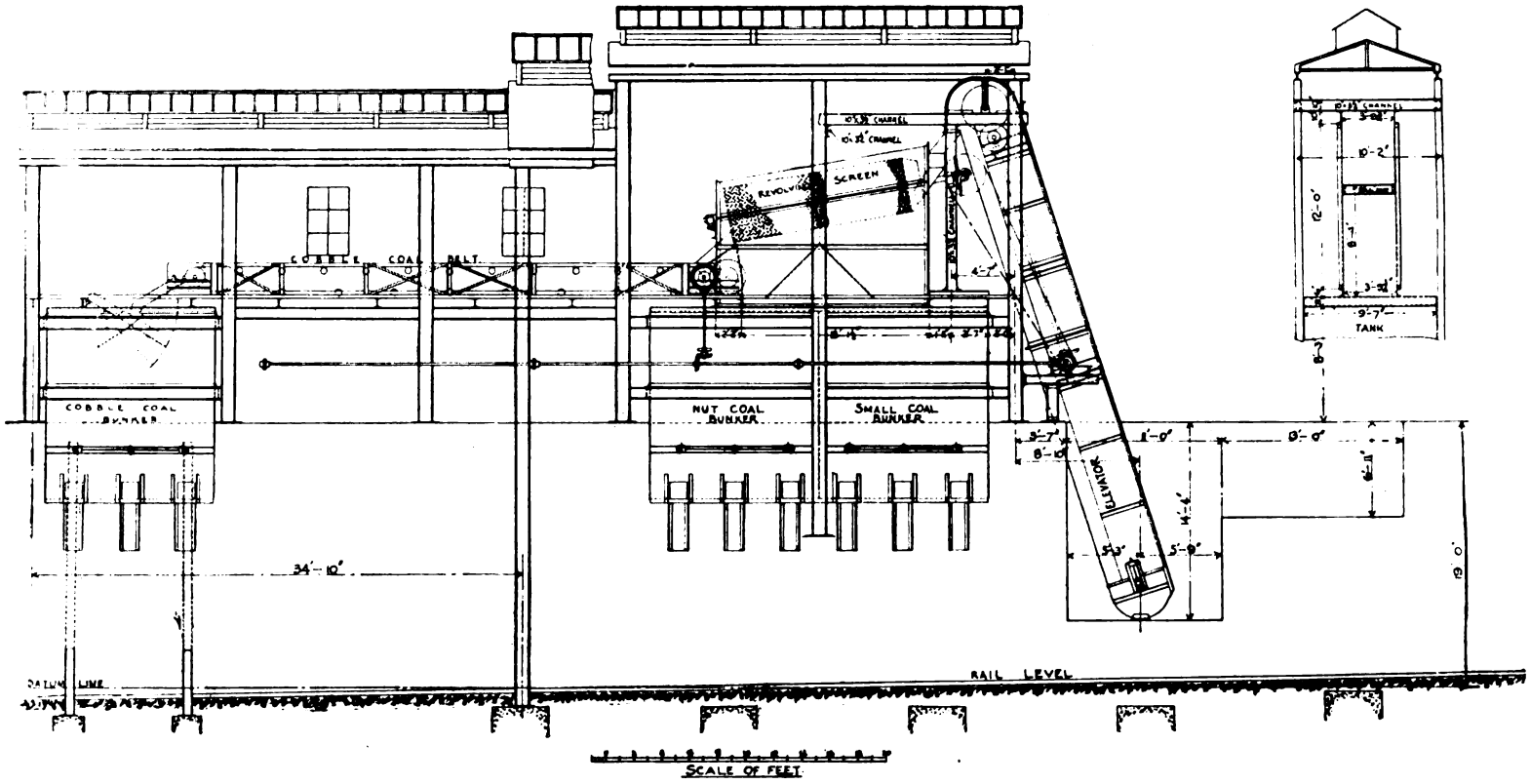

FIG. 719.—ELEVATION OF "SMALL" AND "NUT" SCREENING PLANT, CWM NEOL COLLIERY.

two chains constructed of cast steel links of the single-eye and double-eye type, as shown in fig. 727, working over hexagonal drums, fitted with hardened steel sprockets or driving horns. Between the chains are flanged rollers, which run on an inverted channel bar mounted on wood packing. Two rollers are provided to each hook, which engages with the axle of the tub, so that slipping is impossible. The arrangement and method of driving the creeper, as well as full details of construction, are shown in figs. 725 to 732. Other details of construction of these plants will be dealt with later.

It is usual to place the tippler so that the tub passes through exactly at right angles to the screen, but this is not necessary, and is sometimes more convenient to place it in an angular position. In the arrangement of heapsteads shown in figs. 733 and 734, kindly supplied by Messrs. Campbell, Binnie and Co., the tipplers are placed at an angle of nearly 45 degs., which facilitates the roadways leading off the full way, which is exactly at right angles to the screens. This will be better understood by a reference to figs. 735 and 736, which show a comparison of the space required—though probably a little exaggerated—by the two methods of branching off the roadways. As will be seen, an important feature of the angular setting is that, besides economising space and reducing the curves, the tipplers can all be set in line, which enables the shaking screens and picking belts to be also in line, instead of one being set in front of the other, which often means that one belt has to be a little shorter, if, as is usually the case, the delivery points of the belts coincide.

In the arrangement shown, the coal is delivered to a smooth-plated distributing shaker or jigger, which has but little inclination, and jigs or trims the coal evenly on to the jigging screen, which separates the small from the best, and delivers the latter to the "bar" picking belt, provided with a jib end. The small coal is delivered to a conveyor or small coal belt and either loaded into wagons or into a hopper, from which it is removed by an elevator for further treatment in a revolving screen. The building is constructed entirely of steel joists, and enclosed by corrugated sheet iron.

The "bar" belt consists of a number of bars as shown in detail in figs. 737 and 738, 1 in. in diameter, spaced to allow $\frac{3}{4}$ in., or more or less, as may be required, between them. Three bars of a section are threaded through the links of a pair of chains of the single- and double-link type, and riveted into the single link of the single- and double-link chains at each end. The fourth bar, which forms the joint of the links, is inserted through pieces of tube, which act as distance pieces to keep the chains apart; the next bar is riveted into the inside link of the double-link chain at the end; the sixth bar has fixed to it a roller, the outside link being cranked to clear the roller as shown. The seventh bar is the same as the fifth, whilst the eighth bar is a joint bar with tubular distance pieces, and may be

FIG. 720.

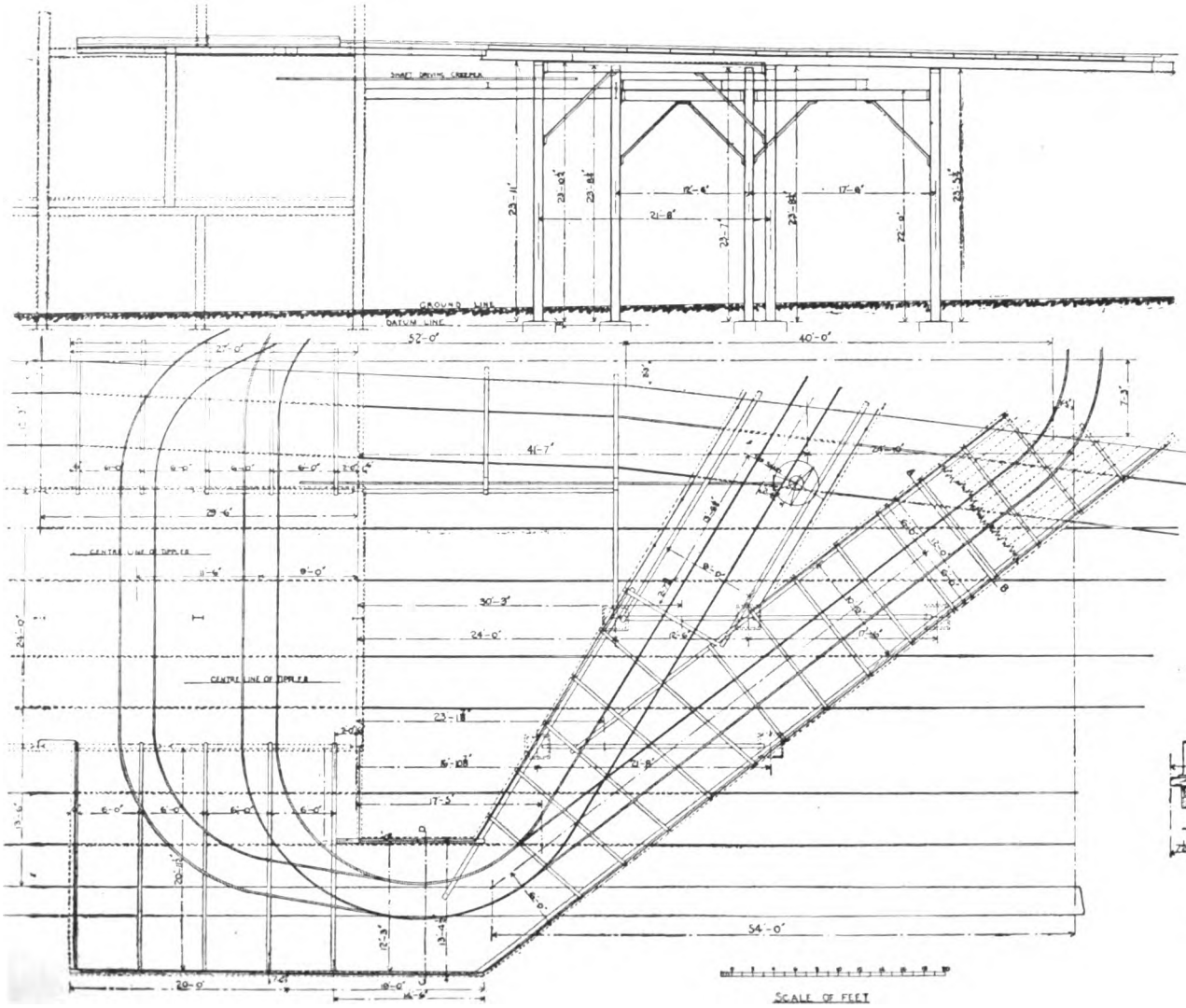

FIG. 721.

FIG. 722.

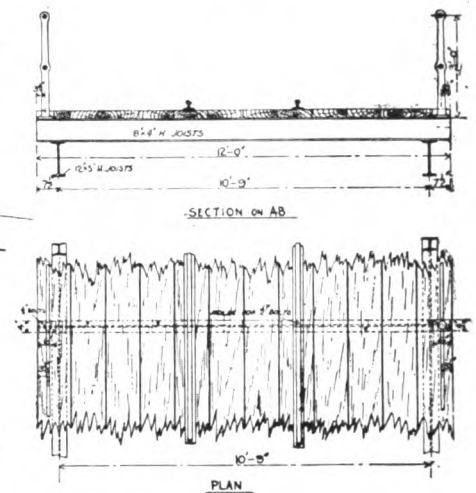

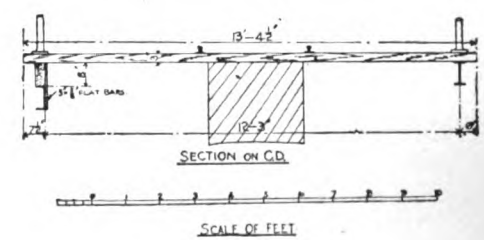

FIGS. 723 AND 724.

FIGS. 720 TO 724.—ARRANGEMENT OF RETURN GANGWAY, CWM NEOL COLLIERY.—(*See* page 336).

FIG. 727.

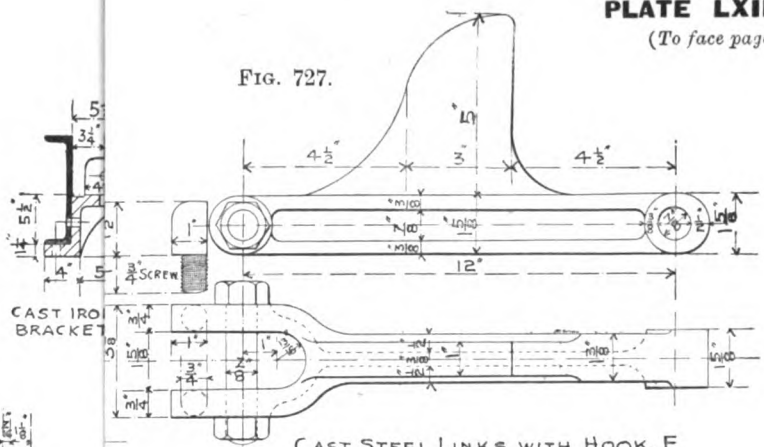

FIG. 728.

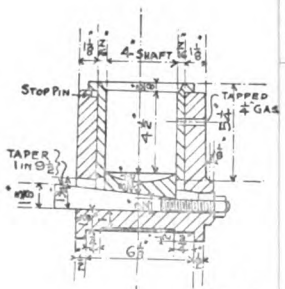

CAST STEEL LINKS WITH HOOK. F

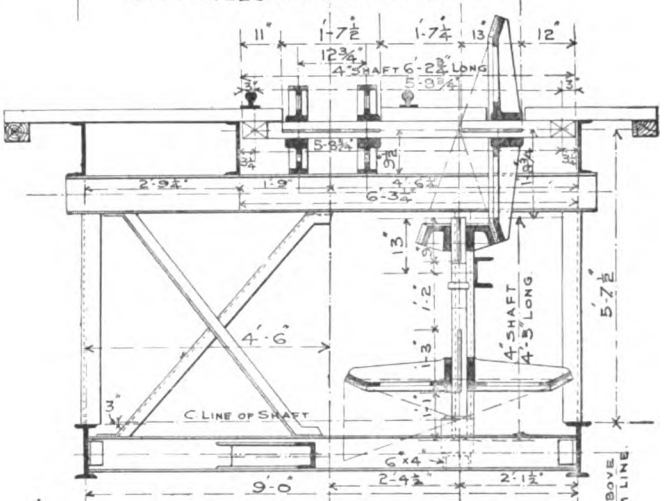

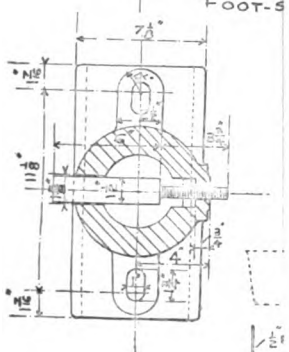

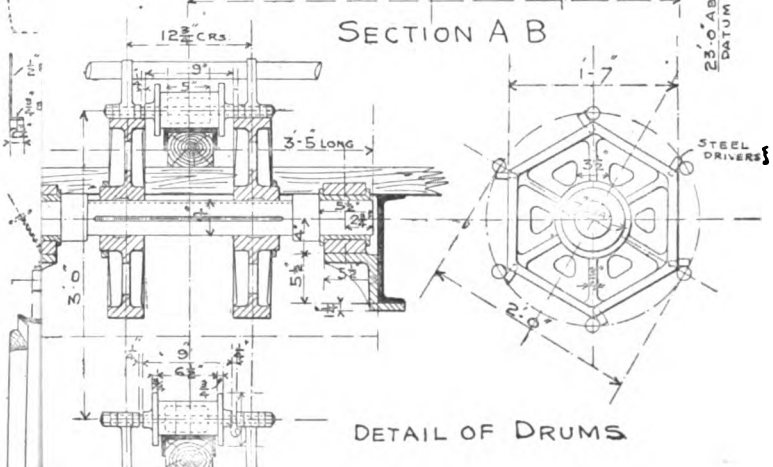

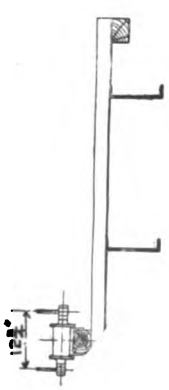

FIGS.

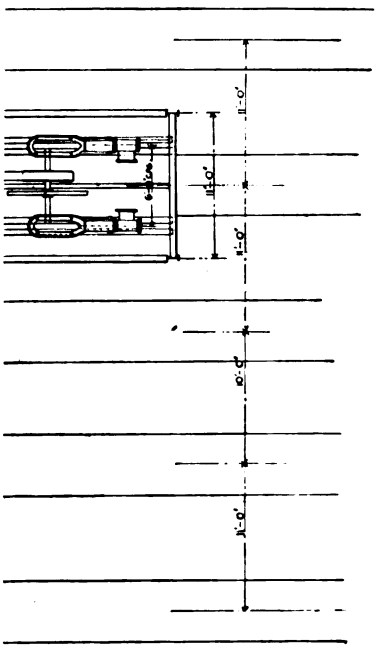

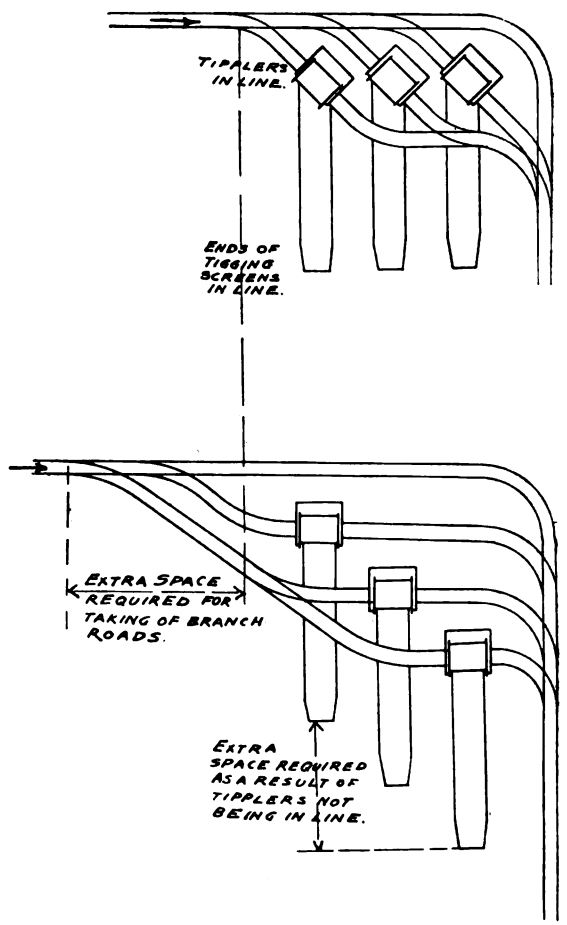
TIPALERS IN LINE.
ENDS OF TIGGING SCREENS IN LINE.
EXTRA SPACE REQUIRED FOR TAKING OF BRANCH ROADS.
EXTRA SPACE REQUIRED AS A RESULT OF TIPPLERS NOT BEING IN LINE.

FIG. 720.

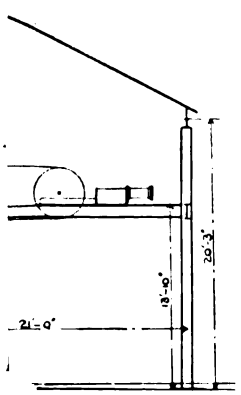

FIGS. 735 AND 736.—COMPARISON OF SPACE OCCUPIED BY "ANGULAR" AND "SQUARE" SETTING OF TIPPLERS.

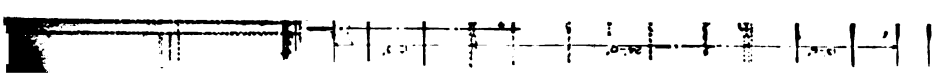

termed the first bar up another section. The belt is carried upon the small rollers at the ends, which roll upon angle bars, as well as by rollers under the pair of heavy intermediate chains, fixed to a spindle revolving in bearings fixed to the belt frame. At intervals an angle bar—with partly bent ends, and nearly the full

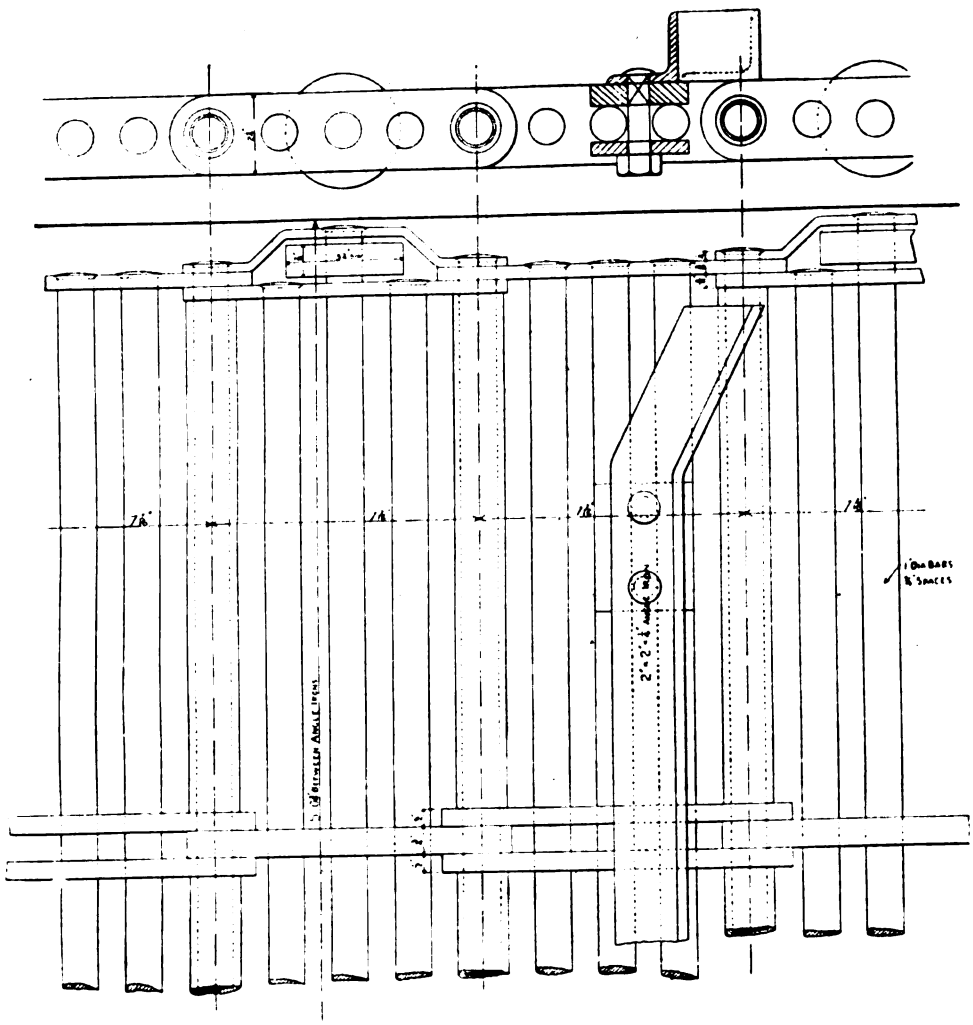

FIGS. 737 AND 738.—DETAIL OF BAR BELT.

width of belt—is fixed to the bars as shown in fig. 740, which answers the purpose of preventing the large pieces of coal from sliding off the belt when it is lowered into the truck, and also of scraping back the small coal which falls through the

bars as it returns. Figs. 739 and 740 show a belt 5 ft. wide assembled together, and *in situ* on the fixed and radial portions of the frame.

The fixed portion of the belt frame is carried upon strong steel joists, whilst the swinging portion is constructed from substantial angle and tee bars, as will be seen from figs. 741, 742, and 743, which respectively show in elevation, plan, and section A B, the construction of the frame and the swing jib end. The fixed part of the frame is that on the left, and is shown in the sections E F and C D (figs. 744

FIG. 739.

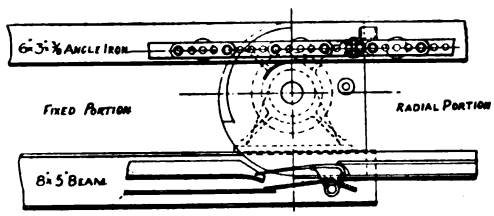

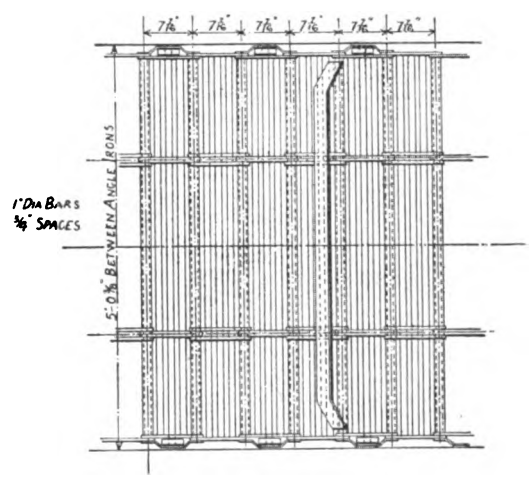

FIG. 740.

FIGS. 739 AND 740.—ARRANGEMENT OF BAR BELT.

and 745). To the steel joists are bolted cast iron brackets, which support the longitudinal angle bars carrying the small rollers at the ends of the belt bars; these brackets are also provided with bearings for the roller spindles which carry the intermediate or "drawing" chains of the belt. The bearings are practically small axle-boxes which protect the end of the spindle and ensure constant lubrication, thus tending to reduce to some extent the screeching and squealing which too often

FIG. 741.

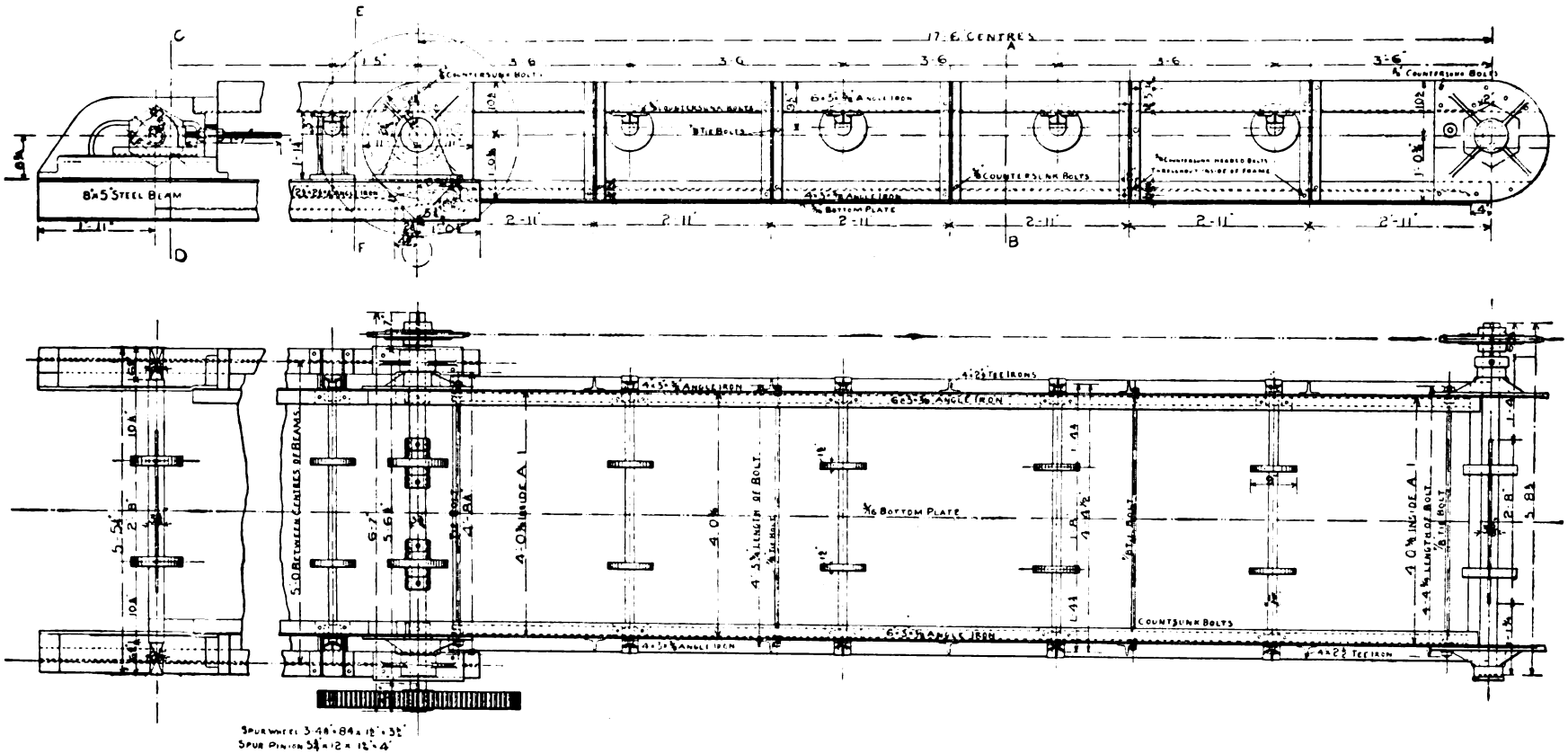

FIG. 742.

FIGS. 741 AND 742.—GENERAL ARRANGEMENT OF BAR BELT.

FIG. 743.

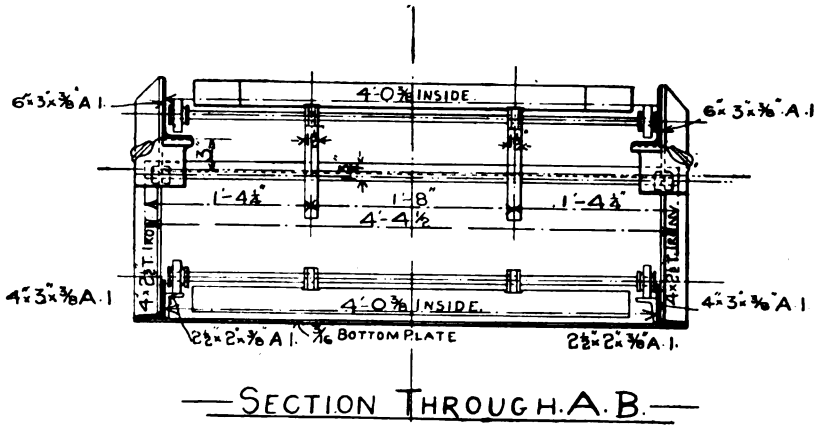

SECTION THROUGH A.B.

FIG. 744.

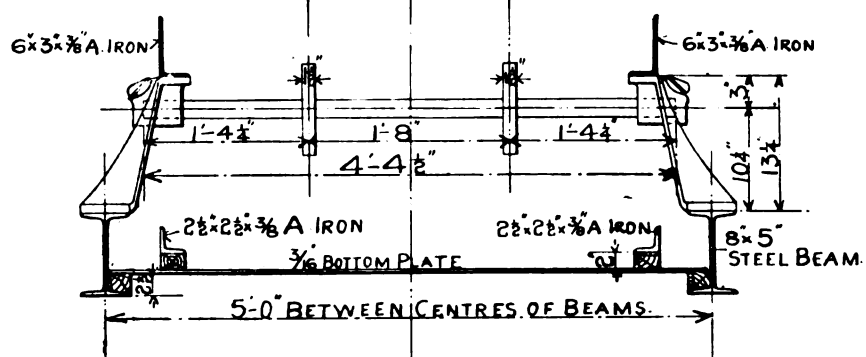

SECTION THROUGH E.F.

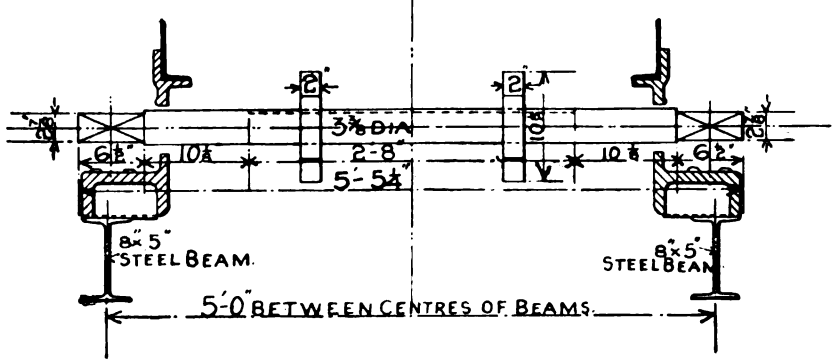

SECTION THROUGH C.D.

FIG. 745.

FIGS. 743 TO 745.—SECTIONS THROUGH BAR BELT FRAME.

is the music accompanying a moving picking belt. Fig. 745 is a section through C D showing the hexagonal drums and shafts, and a section through the bracket supporting the main bearings which are of the angular pattern. The whole of the fixed part of the frame, therefore, is constructed in a strong and substantial manner, and is independent of the girders carrying the heapstead floor, and has the advantage that it may be built up and accurately fitted together in the machine shops before being erected at the colliery. Usually such accuracy in fitting is considered unnecessary and superfluous, but any piece of machinery, such as a picking belt, which is required to run for years with little or no attention being required, is worth every penny of the extra cost involved in the better design and execution of the work.

The construction of the "jib," or swing portion, is shown on the right of figs. 741 and 742, and in the section through A B in fig. 743. The outer end which lowers into the truck is the driving end of the belt; the shaft carrying the hexagonal chain drums being extended at one end and fitted with a sprocket wheel which is driven by a sprocket chain from the sprocket fitted to the main driving shaft carrying the spur gearing at the end of the fixed portion of the frame. The jib is hinged to this shaft by means of two strong cast iron cheeks, to which the top and bottom angle bars are secured, and between the two ends of the jib the frame is constructed of strong vertical tee bars riveted to longitudinal angle bars.

The underside of both the fixed and swinging parts of the frame is enclosed by a smooth plate upon which is deposited any small coal that may fall through the bars of the belt. In the fixed portion this plate is supported upon wood packing resting upon the inside flanges of the joists, as shown in section E F, and is riveted to the bottom longitudinal angle bar of the radial portion (see section A B). Other angle bars—in the radial portion—inverted and riveted to the bottom longitudinal angle bars, support the end rollers of the belt, so that the angle bars fixed to the belt will just scrape the bottom plate. In the fixed portion—the bottom plate being wider—the angle bars for the end rollers are supported on wood packing and fixed to the plate, in a reverse position to those on the radial portion, so that the rollers travel on the back of an angle-bar flange in a radial portion, and on the inside flange of an angle bar on the fixed portion. By this means any small coal which falls through the bars is conveyed back to the screen end of the belt, and delivered by means of a shoot, which is shown below the jigging screen in the heapstead arrangement in fig. 734.

The method adopted for conveying the belt and coal from the radial portion to the fixed portion at the hinge is shown in detail in figs. 746 and 747. As will be seen, the vertical flange of the upper angle bar is cut square with the centre line, the flat flange being extended and bent to a radius struck from the centre of the

main shaft. The upper angle bar of the fixed portion has its vertical flange cut to a radius also struck from the centre of the shaft, the cast iron cheek being recessed to receive it, this recess being continued to allow for the movement of the radial portion, whilst the flat flange is continued straight and bevelled to fit closely the bent flange of the radial angle bar. The path is thus kept continuous for the belt rollers on the top of the frame. At the bottom a pair of small brackets secured to the bottom plate of the radial portion carries a spindle A, upon which, by means of the hinge C, is mounted a bridge plate B which is free to move in an up or down direction; on each side of this plate is a cast steel bridge piece, also free for vertical adjustment. The latter at one end is fitted closely to the inverted angle bar of the radial portion, and its other end reaches over the reversed angle bar of the fixed portion; the bridge plate B is bent to allow one end to pass under the bottom plate of the radial portion, and is long enough to reach over and rest upon the bottom plate of the fixed portion. As the radial portion moves downwards these bridges move with it and slide over the angle bars and bottom plate respectively, so that when the jib is lowered to its fullest extent, the bridges will occupy the position shown by the dotted lines.

The jib is raised and lowered by means of flexible steel ropes wound on an overhead drum worked by a worm and wormwheel, as shown in figs. 748, 749 and 750. The worm is driven from shafting actuated by the engine driving the screening plant by means of belts, one open and one crossed. Three pulleys are fitted to the overhead shaft, the outside ones running loose, the middle one being keyed to the worm shaft. Striking gear, arranged to be operated by a hand lever in a convenient position for the attendant, moves either belt—according to the direction in which the jib is required to move, on to the middle fast pulley. The jib is balanced by weights which may be suspended in any convenient position to be out of the way. Once moved into any position, the worm gearing prevents any possibility of the jib slipping from that position. In arrangements worked by spur gearing it is sometimes necessary to arrange a ratchet wheel and pawl to keep the jib in position, which must be lifted before the jib can be lowered.

The preparation of anthracite coal requires rather different treatment by the addition of breaking plant. Owing to its hard and compact nature, and to the very small amount of volatile matters which it contains, it cannot be burnt so easily as the ordinary bituminous coal. It is found that in order to make it burn well, the pieces of coal should be of a fairly uniform size, so that the air may have a free passage through the mass to ensure combustion. Anthracite coal burns only on the surface, and hence it is necessary to have a greater proportion of surface to a given bulk of coal than is the case with the bituminous varieties, which can only be obtained by careful sizing. Slow combustion is also necessary, and for this reason

Fig. 746.

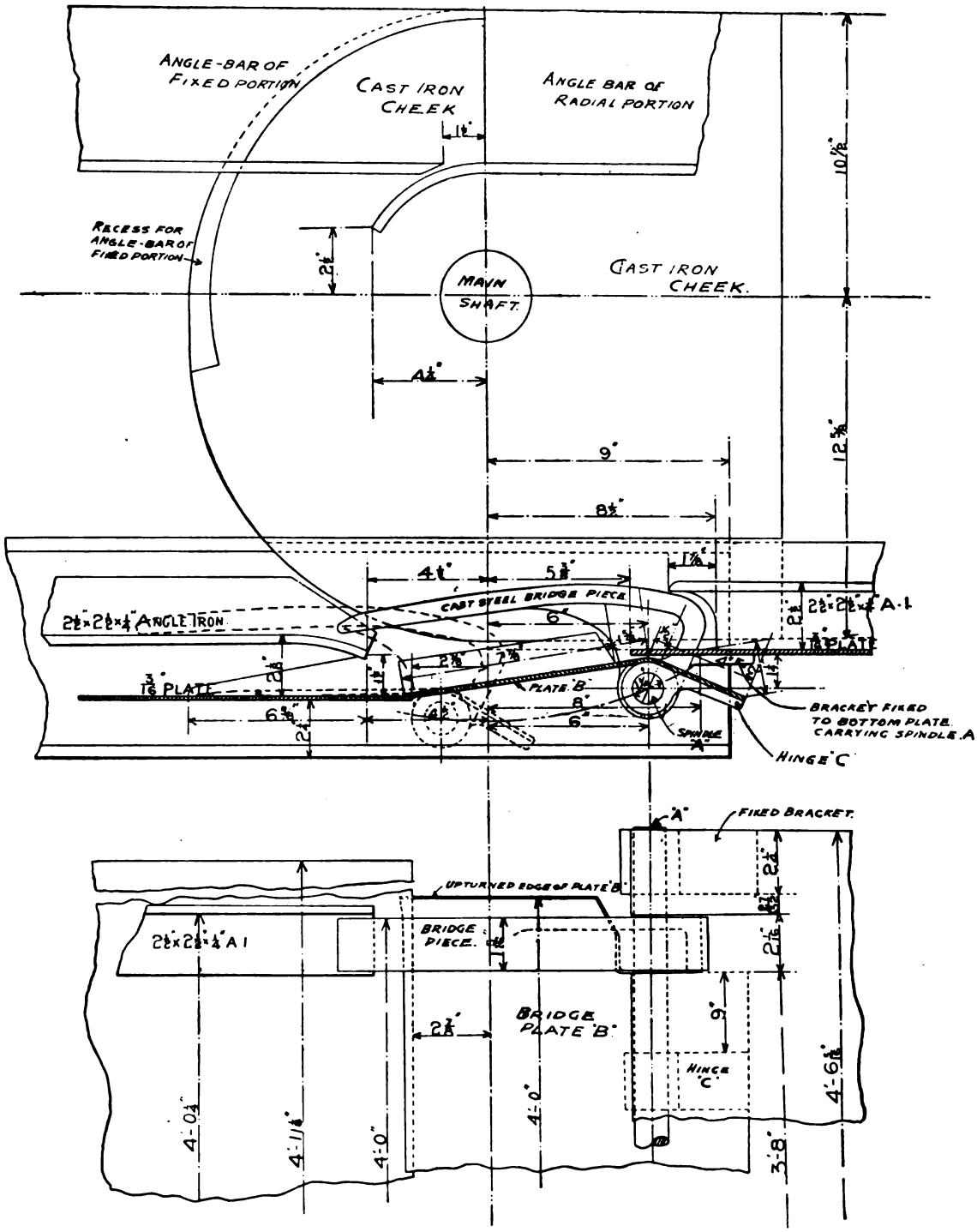

Fig. 747.

Figs. 746 and 747.—Detail showing Bridging of Bar Belt at Hinge.

FIG. 748.

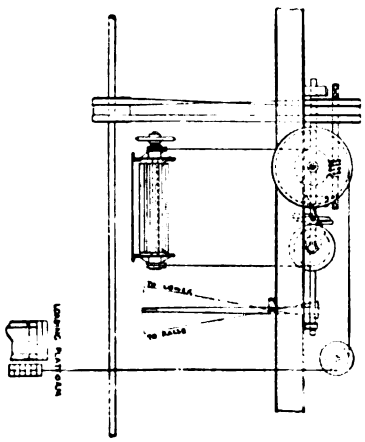

FIG. 749.

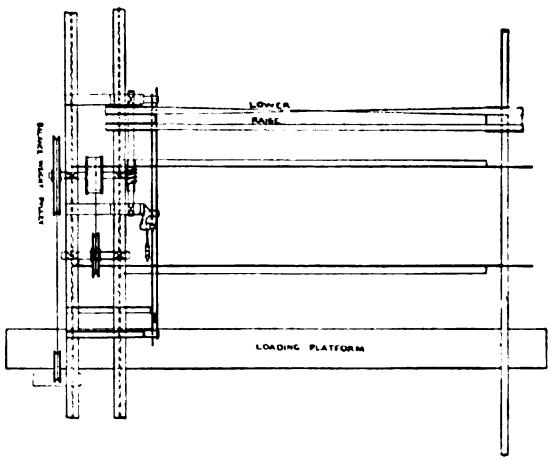

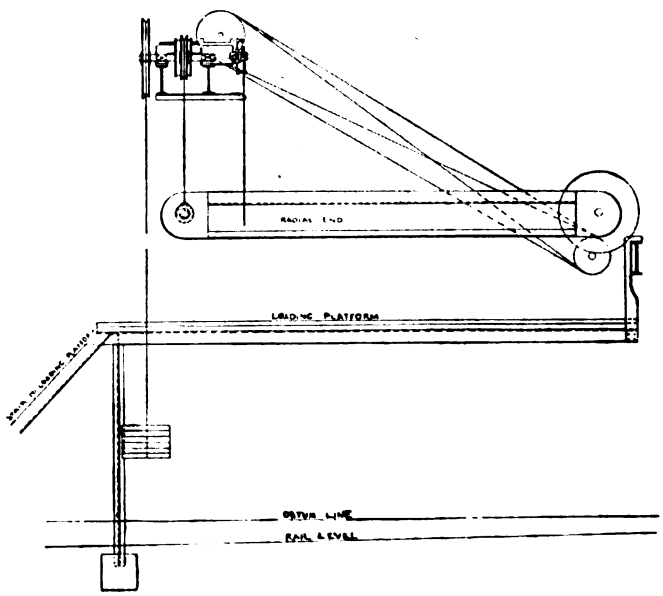

FIG. 750.

FIGS. 748 TO 750.—LOWERING ARRANGEMENT FOR JIB END.—CAMPBELL BINNIE AND CO.

the coal is not burnt in open fires, but in close stoves, for which purpose it is eminently suitable, being free from smoke and dust.

A diagrammatic arrangement of breaking and screening plant for dealing with anthracite coal is shown in fig. 751, kindly supplied by Messrs. Sheppard and Sons Limited. The coal is discharged from the tub to the "Billy" screen A, which is fitted with bars about 1¼ in. apart, and all the small passing through these into the "Billy box" after being weighed is passed into a small coal hopper. The large coal from A is passed to the shaking screen B, which may be provided with screen bars from 5 in. to 7 in. apart, all the coal above this size going to the large coal wagons by means of a shoot C.

It is usual to break only the smaller pieces of large coal which pass through the bars in screen B, from which it is conveyed to the No. 1 breaker D, a machine consisting of two barrels about 16 in. in diameter, into which are fixed a number of cast steel spikes about 4 in. long and about the same distance apart. After passing through this machine, the coal is conveyed by means of the conveyor E and elevator G to the vibrating sizing screens H_1, H_2, and H_3, where the nuts and cobbles are taken out by means of the screens H_3 and H_2 end conveying belts J and I. All the coal passing over the screen H_1 is returned to the No. 2 breaker F_1, where it is broken and conveyed into the small hopper, from which it is again raised to the sizing screens by the elevator G. Coal passing over H_2 are "cobbles," over H_3 "nuts," but the coal passing through the gauze on H_3 is conveyed by means of the elevator K to the revolving screens L and M. The former removes the "large peas," while the latter separates the remaining coal into "small peas" and "duff."

The proportion of each size obtained by the process depends upon the relative hardness and cleavage, and accordingly varies very much according to the quality of the coal treated. Approximately, the following will give some idea of the results obtained of breaking large coal into nuts:—

	Inches.	Per cent.
Cobbles, say,	2½ to 3½	17
Nuts „	2½ to 1¾	17
Nuts „	1¾ to ¾	32
Peas „	¾ to 5/16	20
Duff		14
		100

It is, however, not uncommon to make even seven or eight sizes, such as:—

	Inches.
Large cobbles	2½ to 5
French nuts	1¾ to 2½
Paris nuts	¾ to 2½
German nuts	¾ to 2½
Large peas	⅜ to ¾
Small peas	5/16 to ⅜
Duff	0 to 5/16

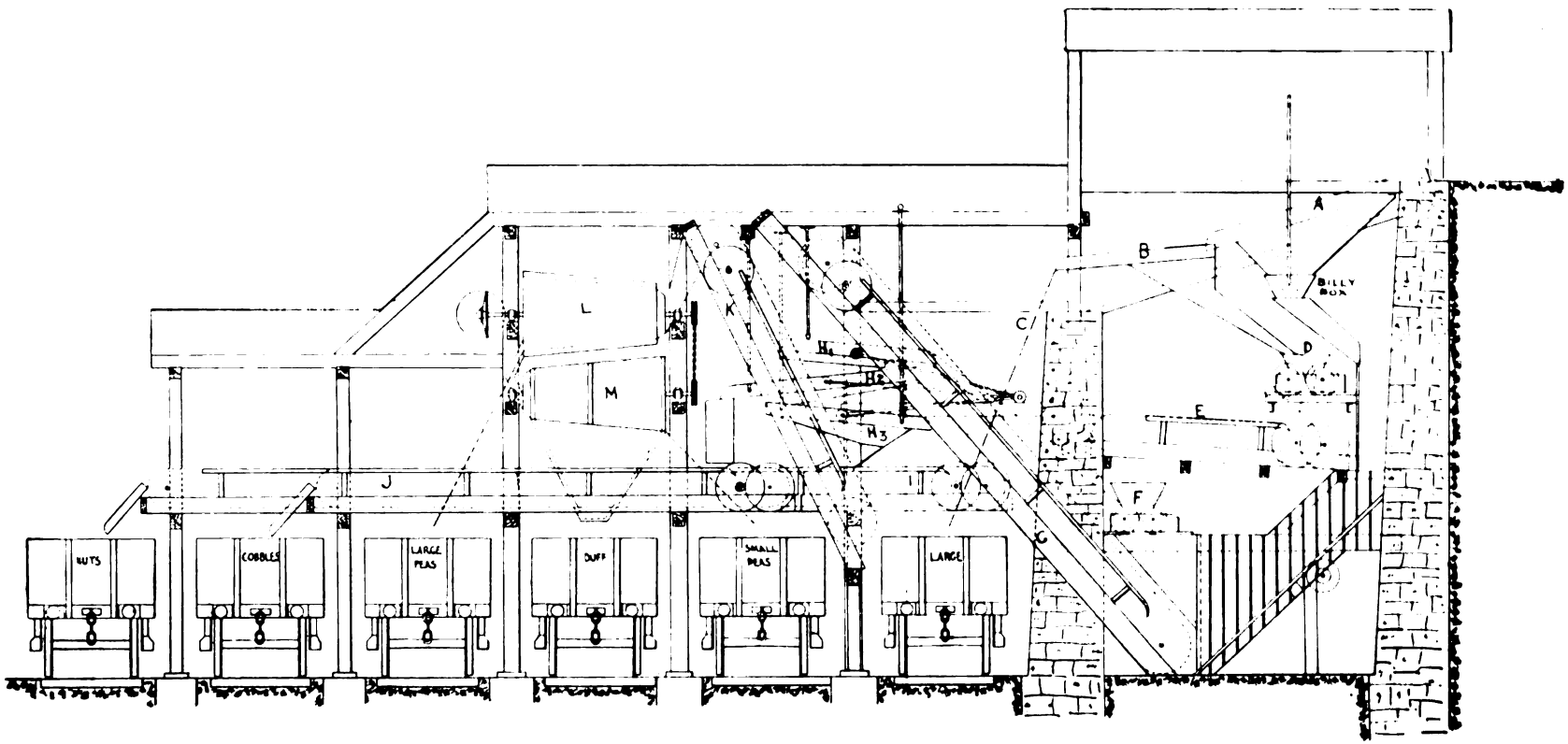

FIG. 751.—SHEPPARD ANTHRACITE BREAKING AND SCREENING PLANT.

The small coal, especially that passing into the " Billy " box, is generally dirty and has to be washed, so that most anthracite collieries are now provided with a complete breaking, sizing and washing plant.

FIG. 752.

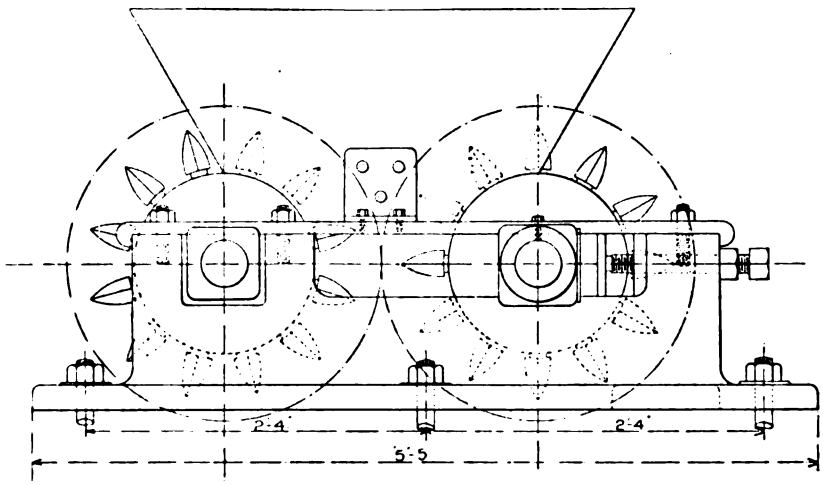

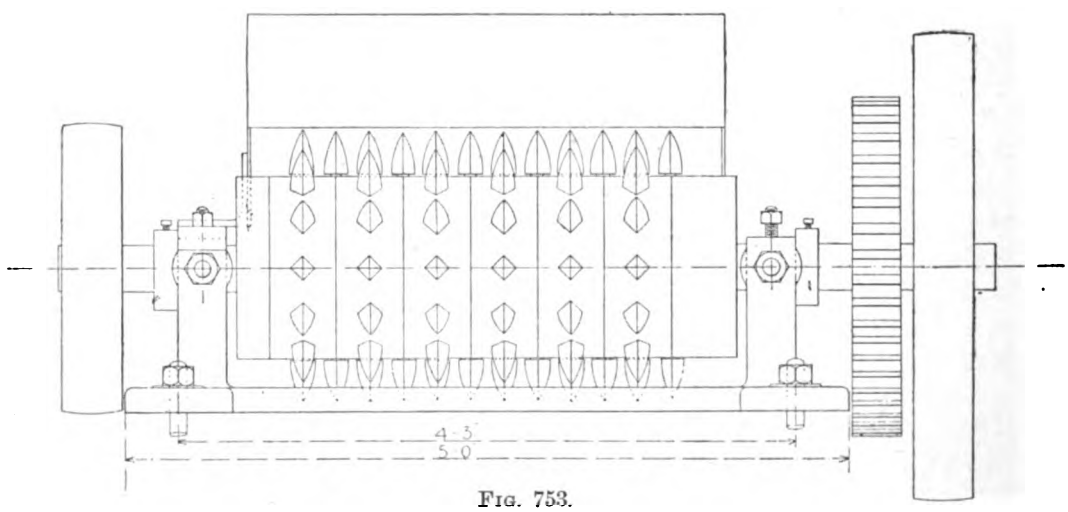

FIG. 753.

FIGS. 752 AND 753.—ANTHRACITE COAL BREAKER.

A coal-breaking machine is shown in figs. 752 and 753. This consists of two drums with spikes, one of which is in a fixed bearing, the other being adjustable. They are driven by belt and spur gearing, and one of the spindles is provided with a small flywheel.

An interesting plant for dealing with anthracite coal is that at Polmaise Colliery, belonging to Messrs. Archibald Russell Limited, and carried out by Messrs. Campbell Binnie and Co. Fig. 754 shows a plan of the colliery surface arrangements.

The whole of the heapstead is constructed of steel I joists, and entirely covered in with corrugated sheet-iron sides and roof, and lighted by side windows and skylights. Coal is drawn from both the upcast and downcast shafts, the cages being arranged to carry two tubs abreast, and both landings are arranged under one common roof, and lines of rails are connected to one common "full way" and common return "empty away" to each shaft. Owing to the cages having two tubs abreast, the railways required a greater number of points and crossings than would be the case had the cages been arranged to carry two tubs tandem, and considerable care had to be taken to arrange the gradients, to enable the tubs to run to each cage as required without necessitating any labour, with the exception of a boy controlling the switches, to regulate the tubs going to either shaft. Near each shaft other switches are arranged to send the tubs alternately to either cage, and to either side of the cage.

The tubs on leaving the cages gravitate from the shafts, along a gangway—which is enclosed with corrugated iron sides and a glass roof, and is, therefore, excellently well lighted, and the railway protected and kept dry—to a creeper, which raises the full tubs high enough to allow them to gravitate to and through the tipplers. Before, however, leaving the creeper they are passed over the weighing machine, which is placed just at the top of the creeper, and consists of a long table so that the tubs can be weighed whilst in motion, as they are moved along at a steady speed by the creeper chain, which passes over the weighing machine table.

The three tipplers are arranged at an angle of about 45 degs. to the jigging screens, so that the tubs are run off one common full road to a common empty road, from which they gravitate back to another creeper, which raises them sufficiently high to enable them to gravitate back to the shafts. The two creepers are necessary in order to limit the difference of levels between the shafts and the tipplers to a reasonable amount. The return gangway is similar to the full-way gangway being enclosed with corrugated sheet iron sides and glass roofing.

From the tippler the coal is discharged on to a smooth-plated distributing jigger, which discharges the coal evenly on to the separating jigging screens, or in the case of No. 1 screen into the breakers. These latter consist of two pairs or sets of manganese steel rollers, provided with teeth, and arranged in a frame with adjustable bearings, so that they may be set closer together or further apart from each other, within the limits allowed by the length of the teeth of the spur wheels;

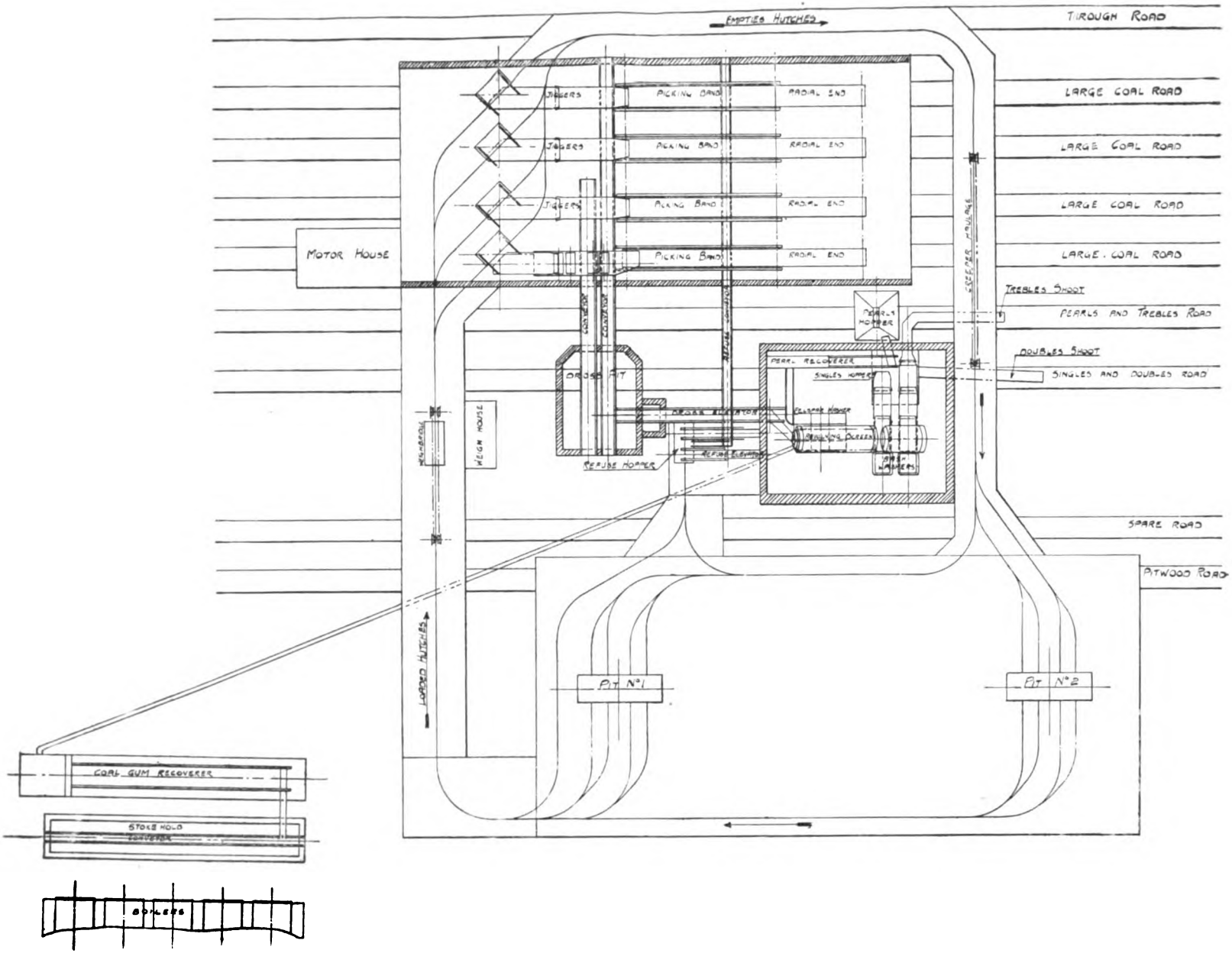

FIG. 754.—PLAN OF BREAKING, SCREENING AND WASHING PLANT FOR ANTHRACITE COAL. POLMAISE COLLIERY.

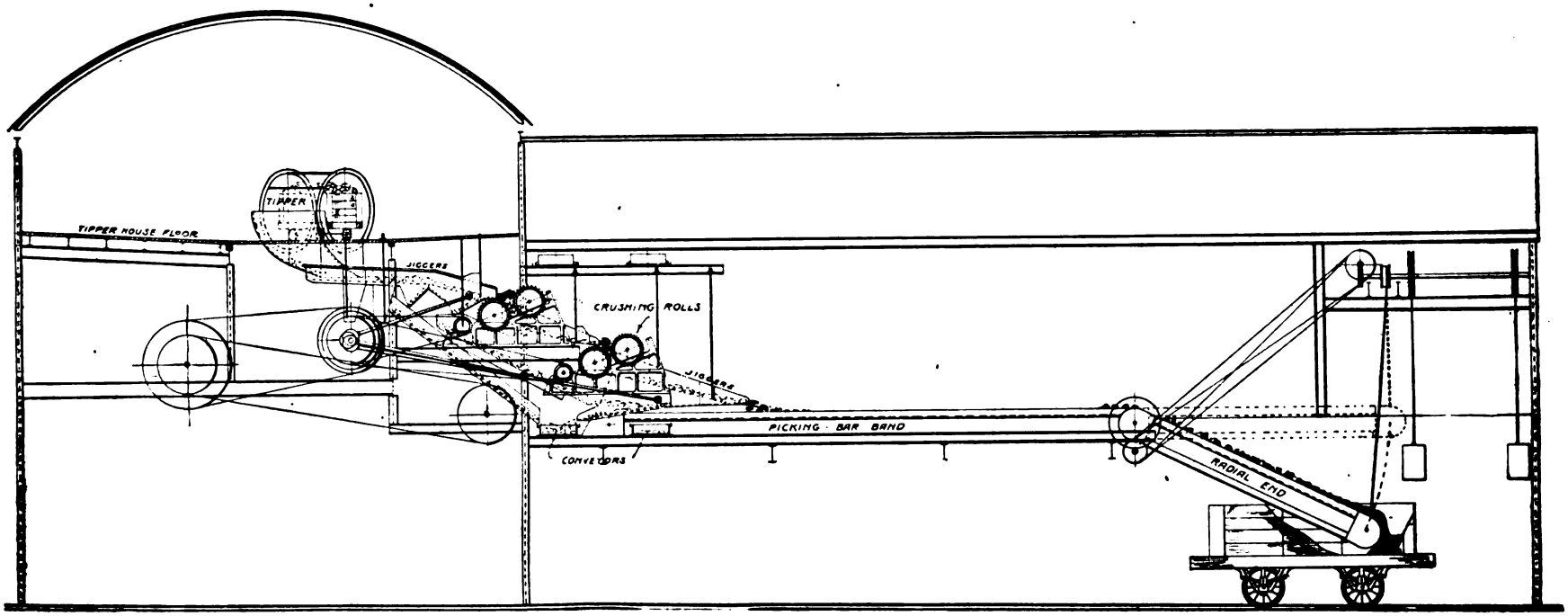

FIG. 755.—SECTIONAL ELEVATION THROUGH SCREENING HOUSE. POLMAISE COLLIERY.

separate sets of wheels being provided to give further adjustment to the rollers if required. There is a separate jigging screen for each set of rollers, each screen being provided with perforated plates having holes slightly less in diameter than the dimension to which the rollers are required to break the coal. Thus, instead of having to pass all the coal through the rollers from the jigging screen, only that which is large enough to require breaking is passed through, with the consequent lessening of the amount of "duff" or useless small coal made. Fig. 755 shows in elevation the arrangement of the three jigging screens and breakers, which is particularly compact, and the arrangement of the screens lends itself to practically accurate balancing, so that though they are worked at a quick speed, there is little or no vibration felt on the structure. The large coal from No. 1 jigger is passed to No. 1 breaker, all below that size passing through the perforated plate, and direct to No. 2 jigger. Some of the coal in passing through the No. 1 breaker is practically pulverised, as must always be the case where anthracite coal is passed through breakers. After passing through No. 1 breaker the coal is discharged to No. 2 jigger, all the small coal falling through the perforated plate to No. 3 jigger, and all above this size being passed to No. 2 breaker, where it is finally broken and discharged on to No. 3 jigging screen, which further separates the small and discharges the remainder on to the picking belt, which conveys it to the truck. Hoppers and scraper conveyors are arranged under the jigging screens, which convey the small coal to the elevator of the "washer," where it is further sized into "jumbos," "trebles," "doubles," "singles," "pearls," and "gum," by means of a revolving screen and washed in bash and feldspar washers.

The picking belts are of the bar type, with jib ends raised and lowered by means of flexible steel ropes, as described and shown in figs. 748, 749 and 750. Under the floor of the picking belt house a scraper conveyor is arranged, and openings in floor communicate with the trough, so that all refuse picked out of the coal is thrown through the openings into the trough and conveyed to a point where it is loaded into tubs or "hutches" and carried to the refuse heap or "byng."

All the machinery is driven by three-phase alternator driven by a Parsons turbine at a speed of 3,000 revolutions per minute; the building is also electrically lighted by means of three-phase alternating current transformers from 500 to 100 volts. It may also be mentioned here that the ventilating fan—situated in the same house as the electric generator—is also driven by a Parsons turbine at a speed of 2,000 revolutions per minute.

The washing plant is contained in a substantial brick building in close proximity to the heapstead, a silt coal recoverer being placed near the boilers, to which all the water from the washer is returned, and all the coal so recovered is used for the

boilers. The whole installation has been laid down on most up-to-date lines, so that the work progresses smoothly and with a minimum of labour cost.

Reverting to figs. 715 and 716 (*see* Plate LXI.), which show the general arrangement of the screening plant at Aberaman Colliery, Messrs. The New Conveyor Company Limited have been kind enough to supply detail drawings of the machinery comprising this plant, which is capable of dealing with approximately 200 tons per hour.

The heapstead is situated away from the shaft, and the full tubs are delivered to a creeper, 40 ft. in length, which elevates them a distance of about 9 ft. 6 in.; high enough to allow them to gravitate to and through the tippler and back to the shaft. As will be seen from figs. 756 to 764, it consists of a pair of chains of the single and double eye link type, the links being of cast steel, supported by means of flanged rollers, which roll upon a path formed by an inverted channel bar upon wood packing. The hook links, which engage with the axles of the tubs, are supported by a pair of rollers, one leading and one trailing, so that there is no risk of the hook tilting and the axle slipping off. The gangway is built up of I section beams and columns, and channel bar runners to carry the wood decking, the whole being strong and substantial, as is necessary with tubs carrying between 35 cwt. and 40 cwt. of coal. The creeper is driven by bevil gearing as shown, which is worked by the engine driving the remainder of the machinery.

Details of the tipplers are shown in figs. 765 to 770. As is customary in South Wales, the round coal is heaped up or "stacked" considerably above the top of the tub, and in order to reduce breakage to a minimum, the sides of the tipplers are enclosed with $\frac{1}{4}$ in. plates and the ends enclosed—the leading-in end by a hinged door provided with catches and a lever to work them, as shown in detail in fig. 770, and the other end by a fixed plate above the height of the tub. The door is opened to allow the full tub to enter, but will pass out below the fixed plate when empty. The rings are of L-section, 5 in. by 3 in. by $\frac{3}{4}$ in. thick, as shown, and 7 ft. 6 in. in diameter on the outside, tied and braced together by 4 in. by 4 in. angle bars and a 2 in. diameter stay bolt at the top. The tubs are kept in position by angle bars over the tub wheels. The tippler rests upon four rollers keyed to strong shafts, and is power driven by means of a chain and large sprocket wheels, one of which is fixed to the tippler ring on the side where the tubs leave the tippler, and the other to a shaft provided with an elliptical spur driving wheel fixed below the tippler. The other elliptical spur wheel is fixed to a shaft driven by spur gearing from another shaft, which is also provided with a belt pulley and clutch, by means of which the tippler is operated. The mechanism for working the clutch is shown in figs. 771, 772 and 773. The clutch is keyed to the shaft, the belt pulley being loose, and is put into gear by the attendant depressing the lever

PLATE LXIV.—(*To face page 356*).

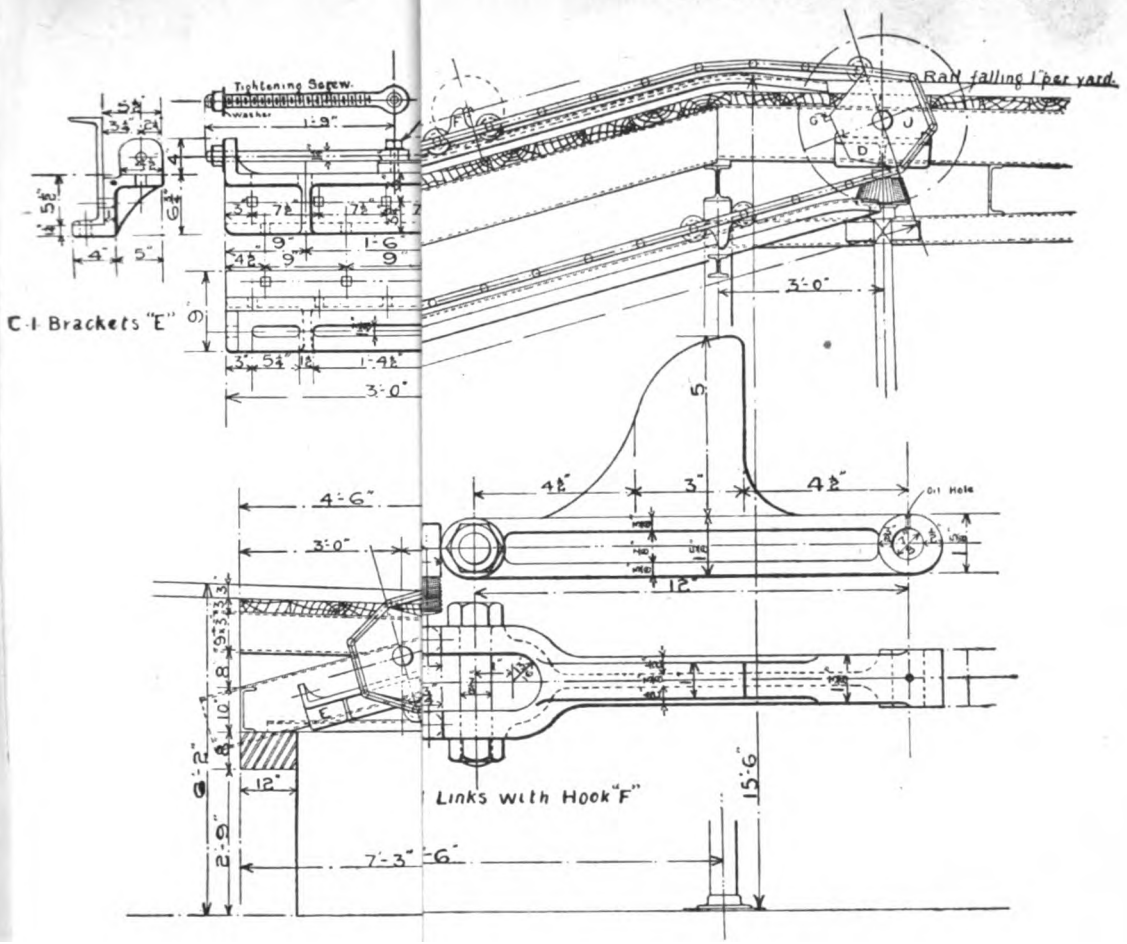

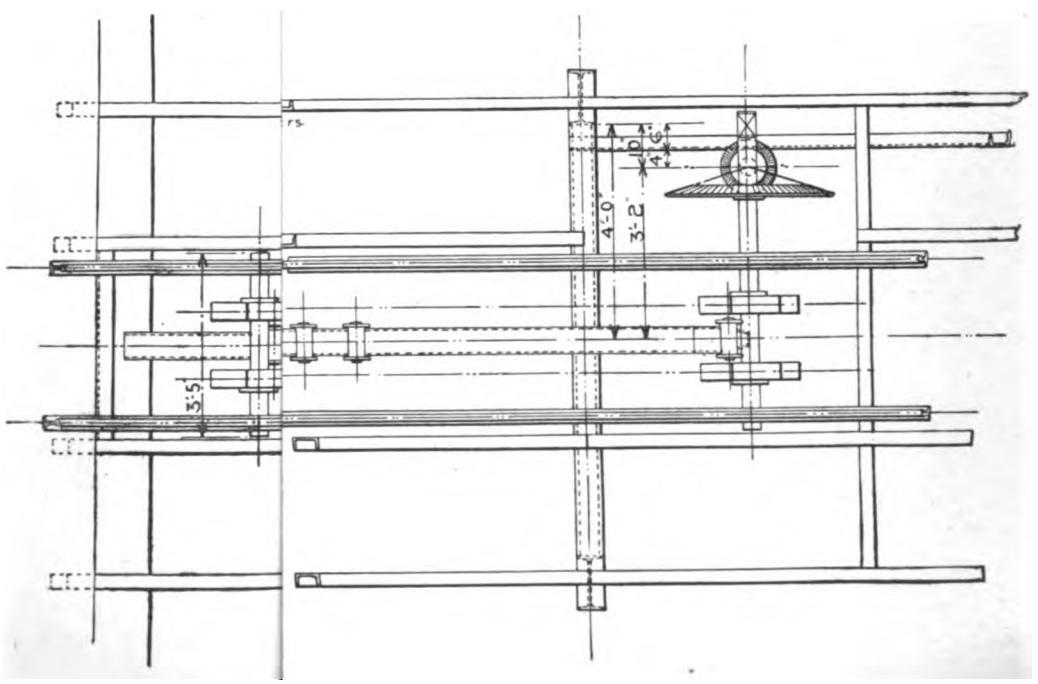

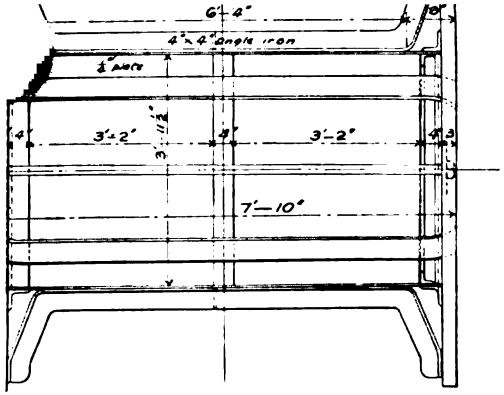

FIG. 770.

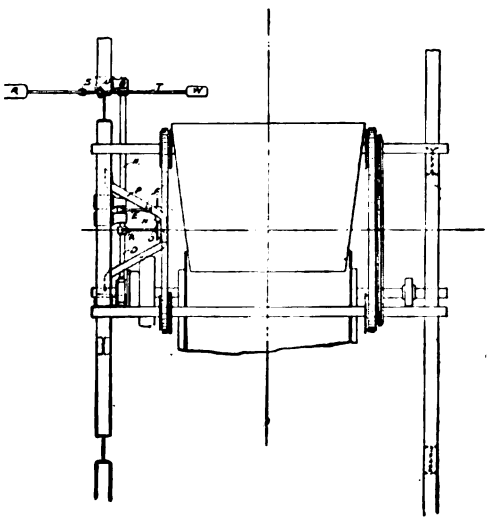

FIG. 773.

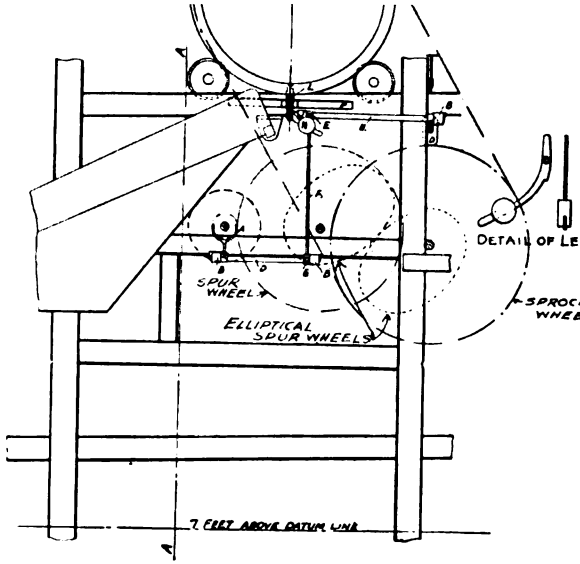

FIG. 771.

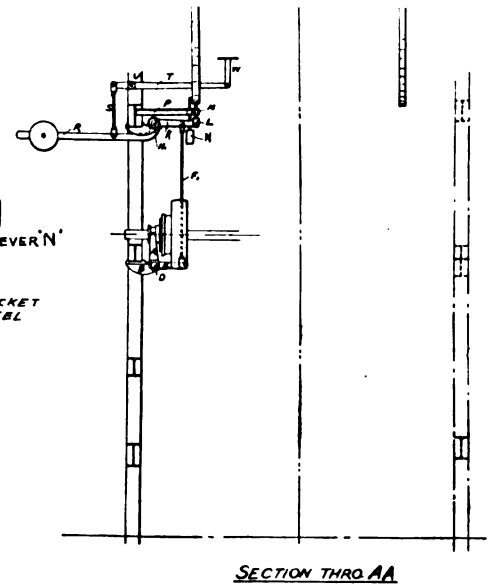

FIG. 772.

FIGS. 771 TO 773.—DRIVING MECHANISM OF TIPPLER.

PLATE LXVI.

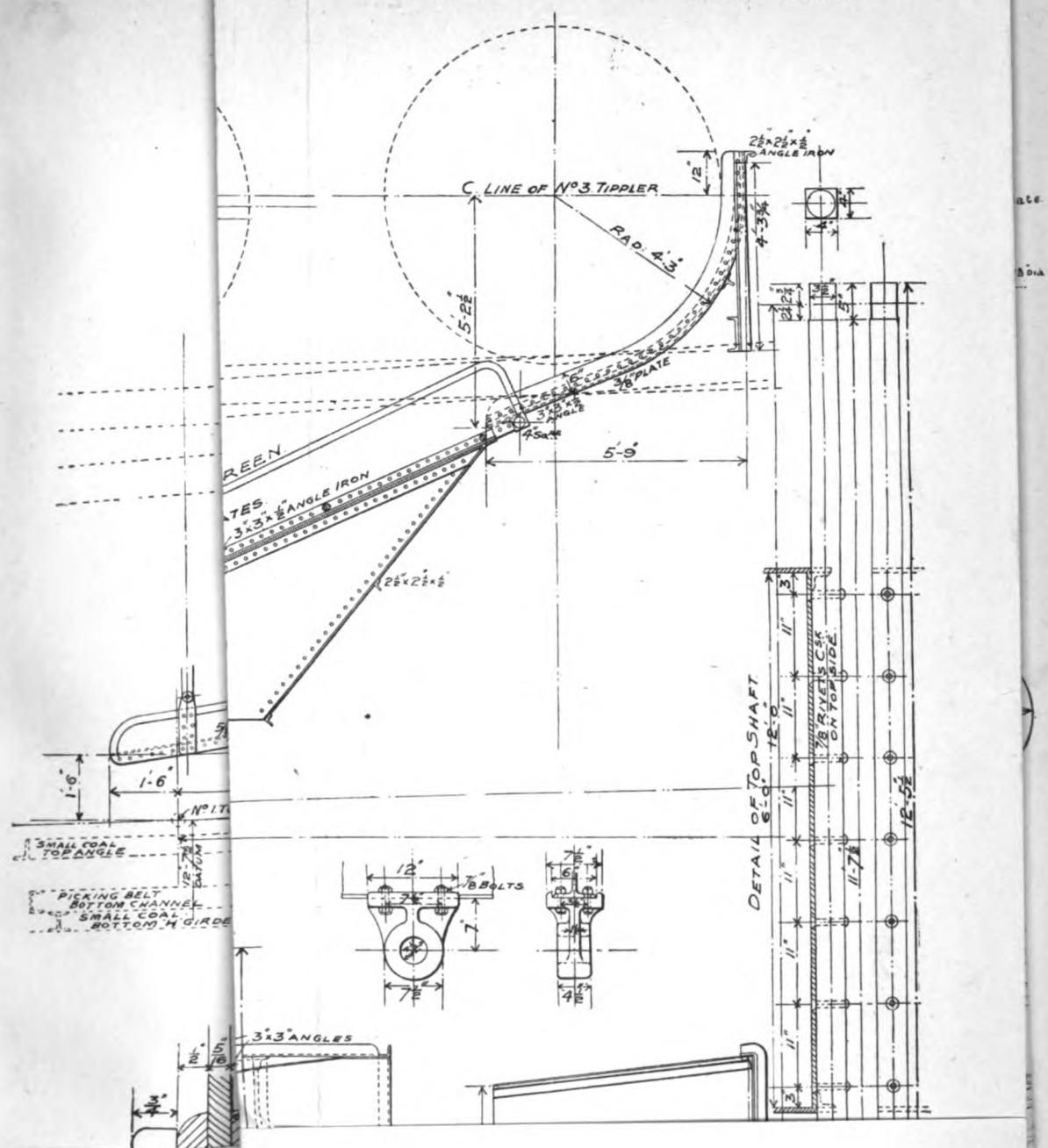

Figs. 782 A

IG. 781.

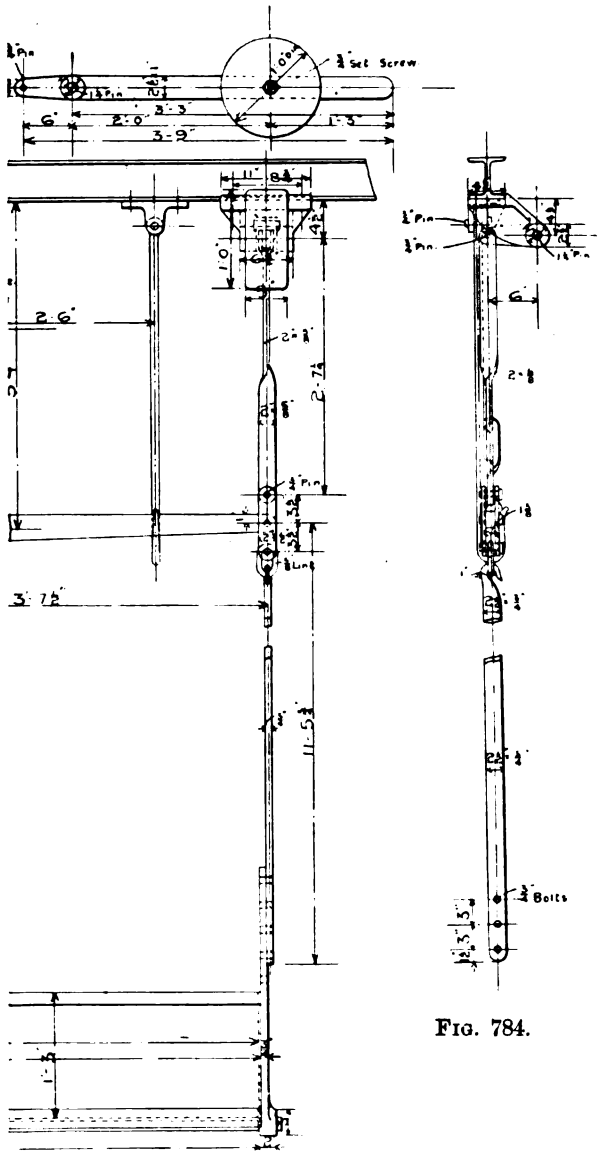

FIG. 784.

OF BILLY BOX.

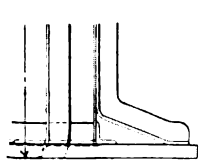

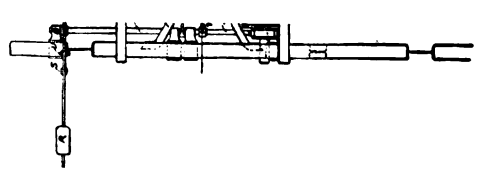

PLATE LXVIII.

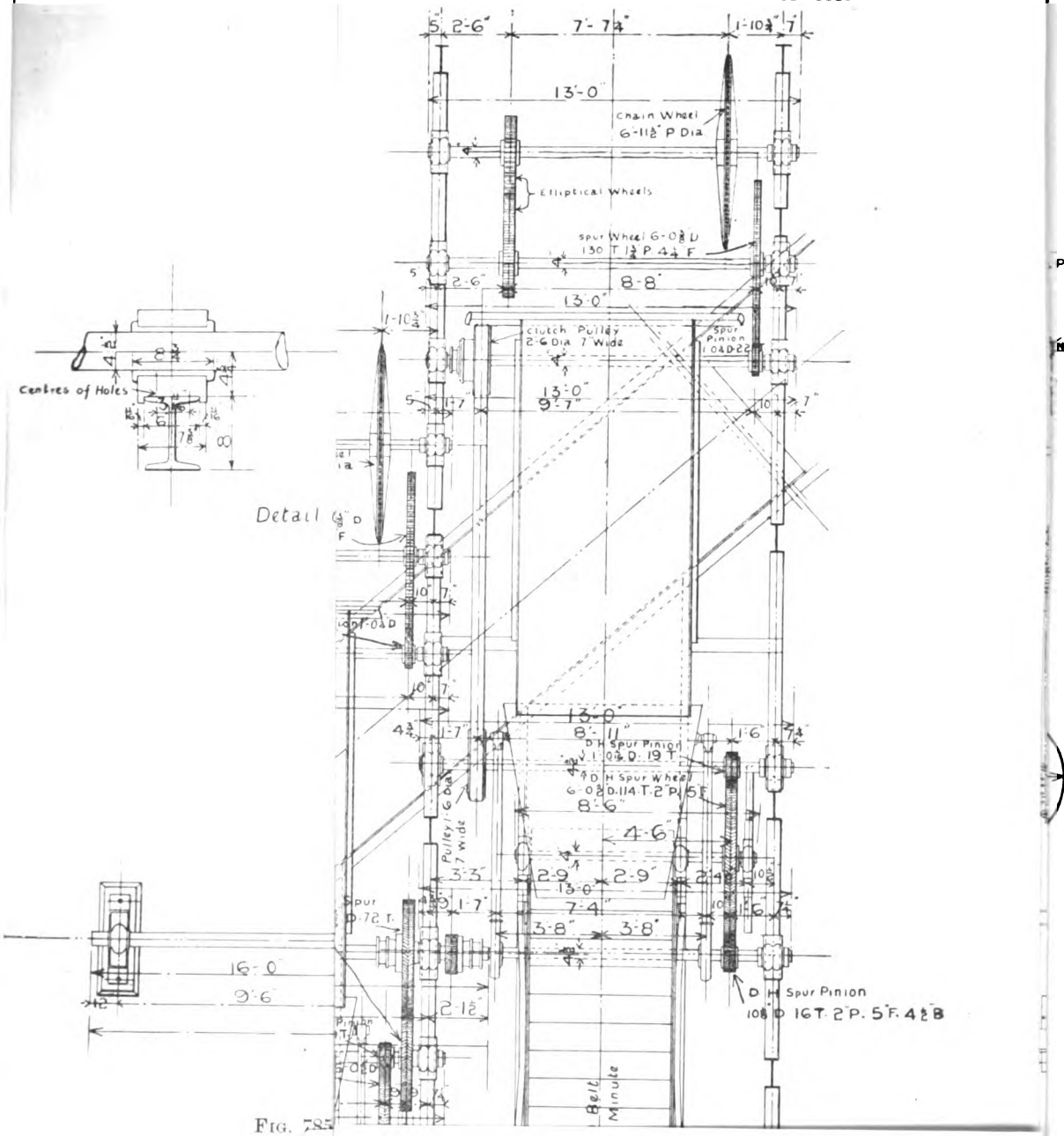

FIG. 785.

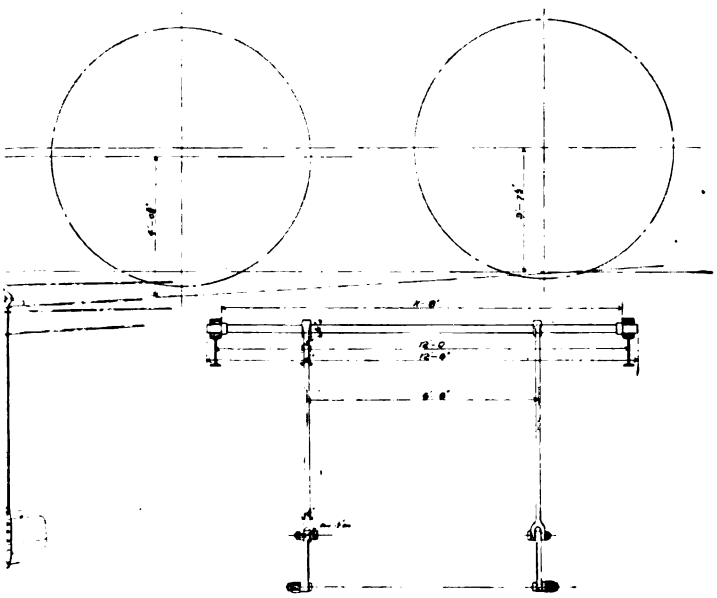

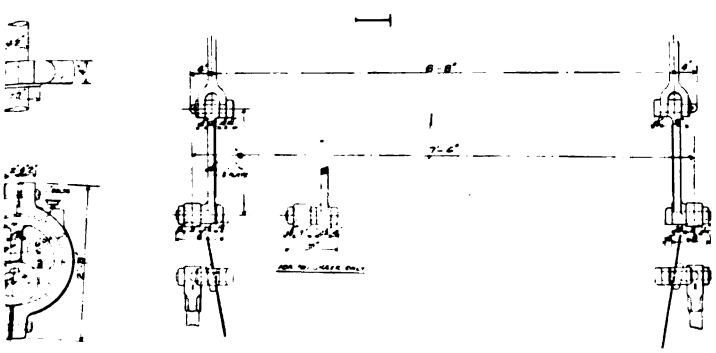

PLATE LXX.

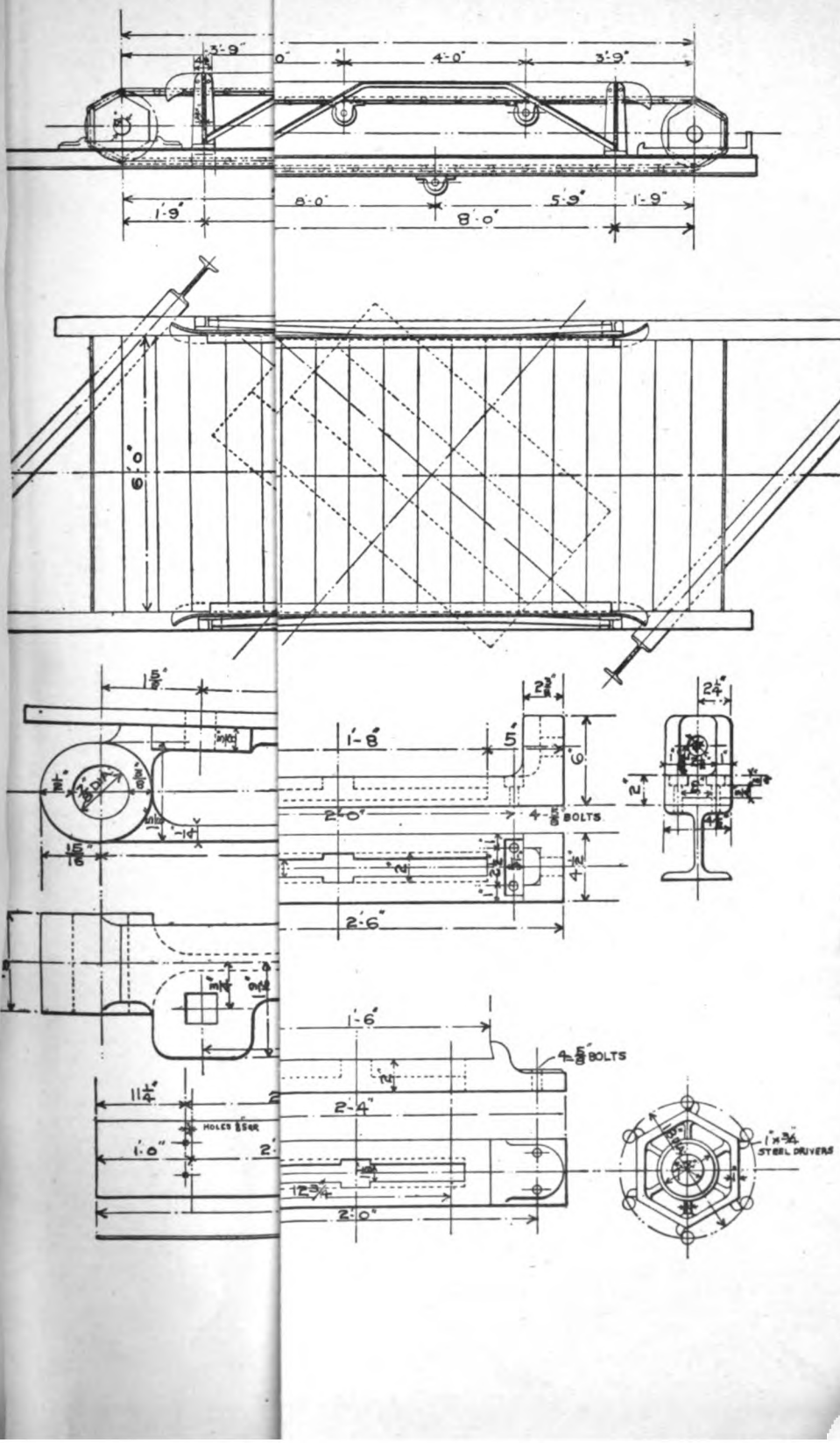
3'-9"
4'-0"
3'-9"
1'-9"
8'-0"
5'-9"
1'-9"
8'-0"
1'-8"
5"
6"
2'-0"
4-⅝" BOLTS
2'-6"
24"
2"
1'-6"
4-⅝" BOLTS
2'-4"
2'-0"
1"x3¼" STEEL DRIVERS

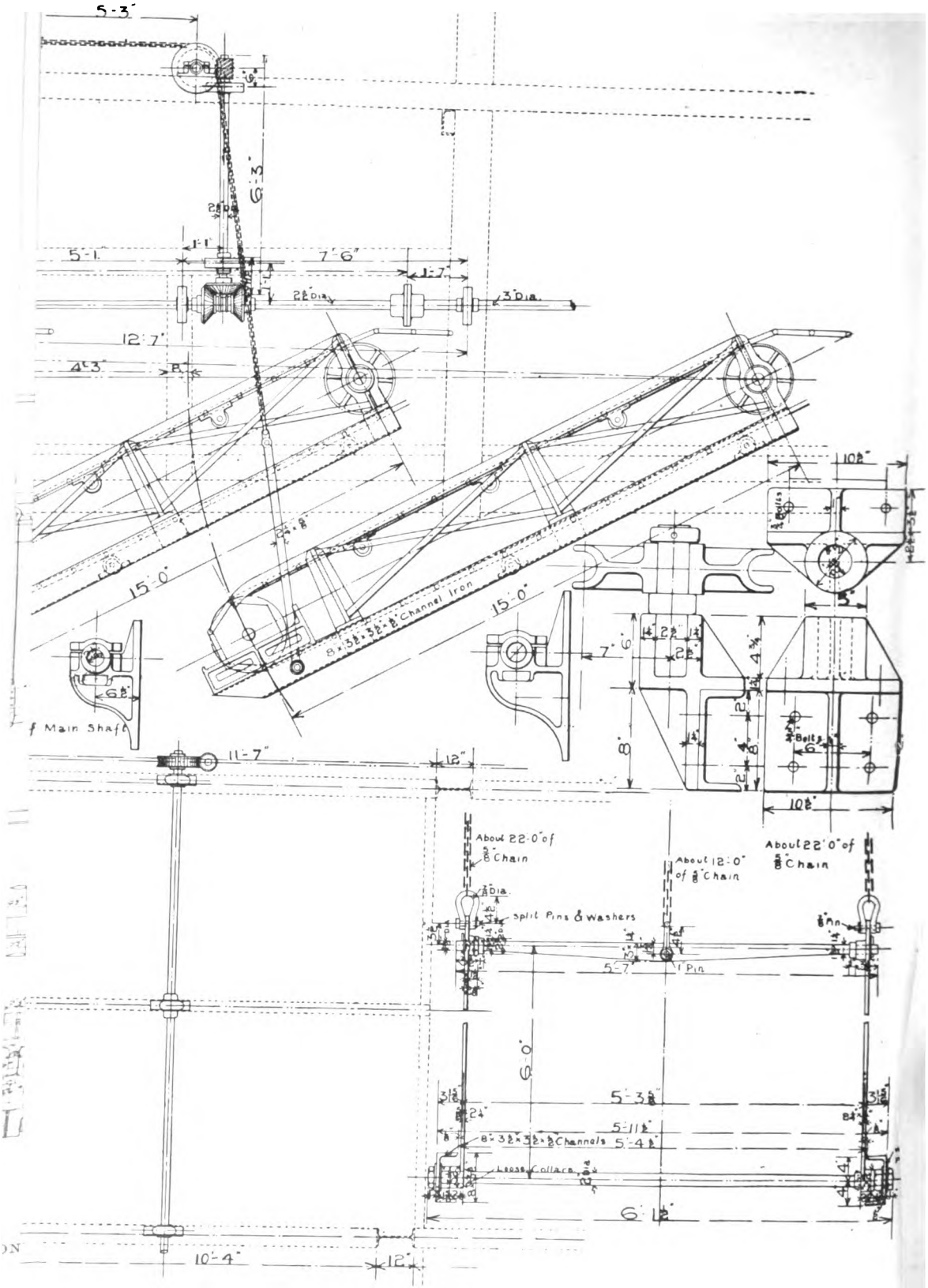

5'-3"
6'-3"
5'-1"
7'-6"
1'-7"
2½" Dia.
3" Dia.
12'-7"
4'-3"
15'-0"
15'-0"
8"×3½"×3½"×½" Channel Iron
f Main Shaft
11'-7"
12"
10½"
5"
7"
6"
8"
4¾"
2"
4"
2"
¾" Bolts
6"
10½"
About 22'-0" of ⅝" Chain
About 12'-0" of ⅝" Chain
About 22'-0" of ⅝" Chain
⅞" Dia.
Split Pins & Washers
5'-7"
1" Pin
6'-0"
5'-3⅝"
5'-11½"
5'-4½"
8"×3½"×3½"×½" Channels
Loose Collars
6'-1½"
10'-4"
12"

FIG. 811.

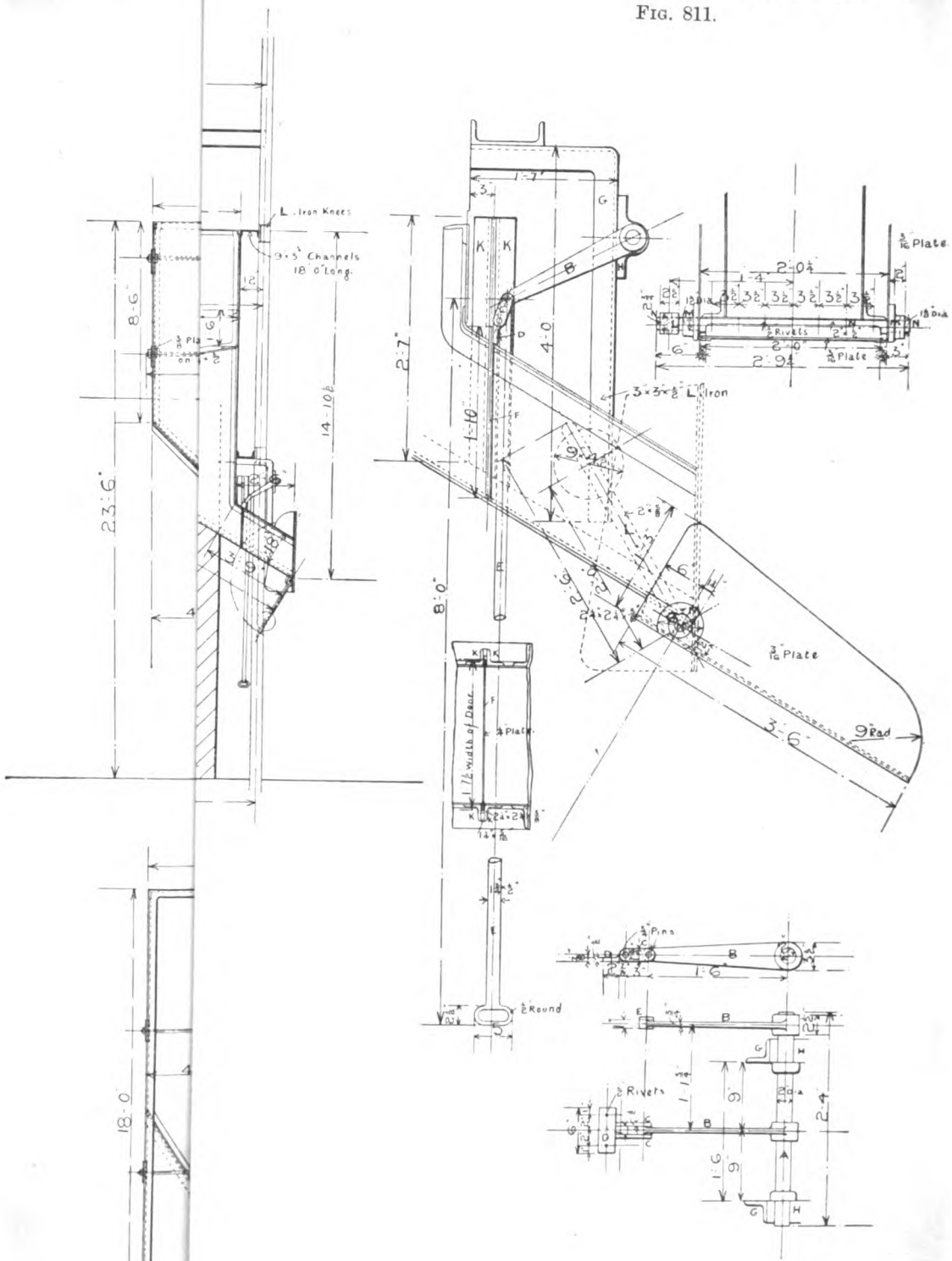

FIG. 812.

TO 812.—DETAILS OF STORAGE BUNKER.

FIG. 815.

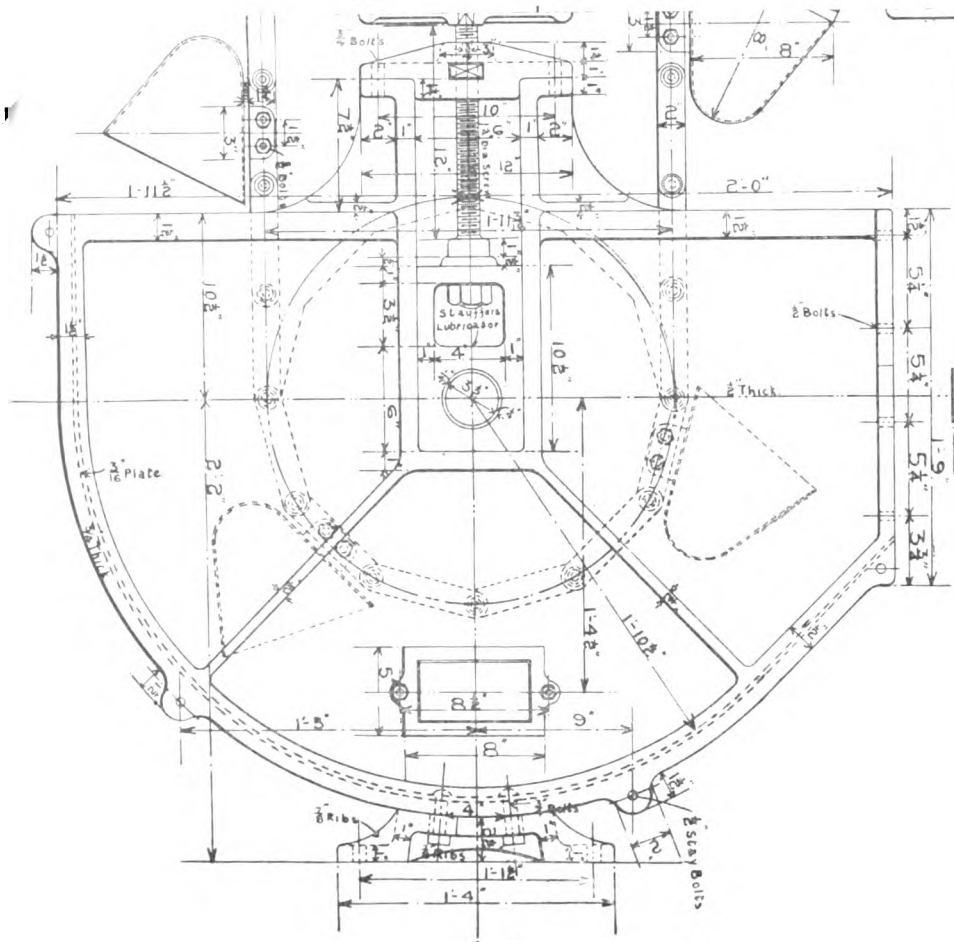

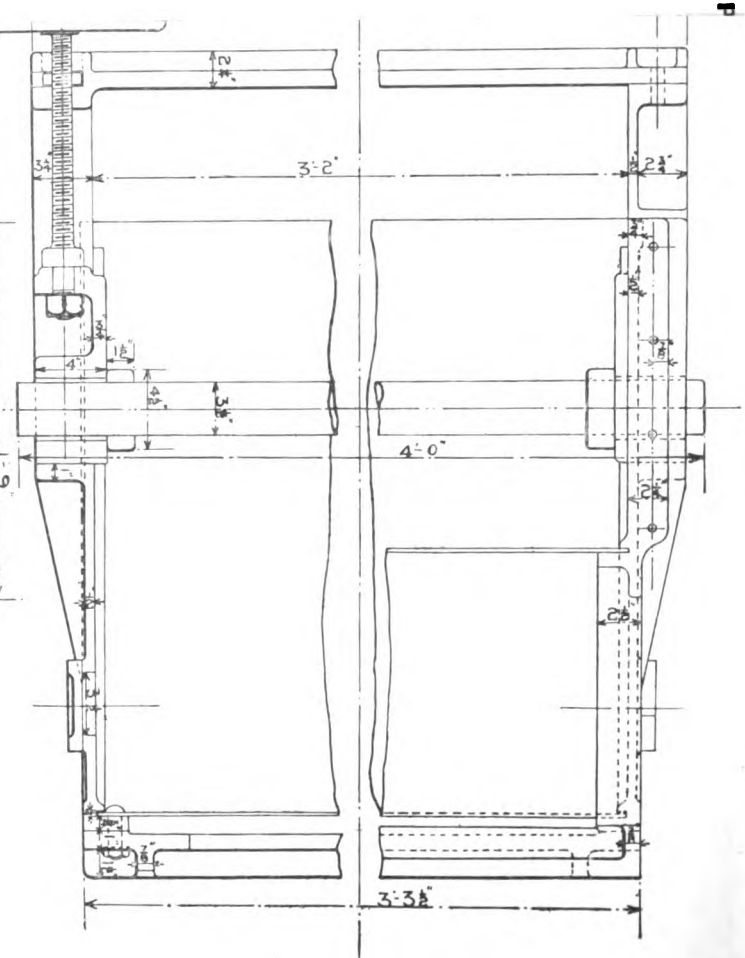

FIGS. 814 AND 815.

FIGS. 816 AND 817.

FIGS. 813 TO 818.—DETAILS OF BOOT AND ELEVATOR.

W by his foot through the levers V, S, R and F. Depressing the lever W also withdraws the stop L, and at the same time throws the clutch into gear, thus starting the tippler, and are kept in this position by a balanced catch lever N which catches the lever K, and so keeps the tippler in motion until it has nearly completed a revolution, when the catch N is knocked clear by a pin in the tippler ring, and the levers are brought back to their normal position—releasing the clutch —by the balance weight upon the lever R.

From the tippler the coal is discharged upon bar screens shown in figs. 774 to 779 (Plate LXVI.), which separates the small, the bars being 12 ft., and carried upon four 1 in. diameter through rods, as shown in the enlarged details, separated by tapered washers, and spaced to allow 1⅛ in. between them. From the bar screen the large coal rolls or slides down to the short distributing jiggers, which trim the coal evenly upon the picking belt.

Each bar screen is provided with a hopper to receive the small coal passing through the bars, which is received in the "billy box," details of which are shown in figs. 780 to 784 (Plate LXVII.) This consists of a box shaped as shown, and suspended by levers from a Salter's spring balance, so that any coal falling into it may be weighed and recorded by the weighman. The bottom of the box is provided with a pivoted balanced door, so that by means of a cord attached to the lever its contents may be discharged after being weighed. The billy box itself is balanced by two weights fixed to pivoted arms, one on each side, as shown in fig. 781, a detail of the weight and arm being shown on the right.

Fig. 785 (Plate LXVIII.) shows in plan the arrangement of the gearing, screens, jiggers and picking belts. The elliptical wheels are for providing a slow movement to the tipplers for the first part of a revolution and a quick return. The whole plant is driven by a double-cylinder steam engine through double helical spur gearing, similar gearing being also used for driving the main picking belts.

The picking belts are 52 ft. long centre to centre of the drums, and 5 ft. in width, with a swing jib 15 ft. in length. They are similar in construction in every respect to the belt shown in detail in figs. 705 to 714.

Figs. 786 to 789 (Plate LXIX.) show details of the suspension rods, eccentrics, and eccentric rods for suspending and working the jiggers.

The small coal belt is set at an angle to the main belts, as shown in figs. 716 and 785. It is 43 ft. 6 in. long, centre to centre of drums, and 6 ft. in width. Details of construction are shown in figs. 790 to 798 (Plate LXX.). As will be seen, the belt frame consists of 6 in. by 5 in. I beams, upon which are bolted cast iron standards carrying a 5 in. by 3½ in. by ½ in. angle bar at the top and between which the plates composing the belt move, the standards being braced

longitudinally by 2½ in. by 2½ in. angle bars, and transversely by 2 in. by ⅜ in. flat bars, the standards being spaced 8 ft. apart. The plates are 6 ft. wide by 10 in. long and ¼ in. thick, and secured to chains consisting of forked cast steel links, the links being made so that one plate will overlap the one following. The chains and plates are supported upon cast iron rollers 6 in. diameter by 4 in. wide keyed to 2 in. diameter shafts revolving in cast iron "filbows" or "close eyes" with an oil cup cast in, secured to the angle bars, and spaced 4 ft. apart. The returning plates are supported in the same way, the rollers being spaced 8 ft. apart and 2 in. out of line with the top rollers in order to clear the bolt heads securing the plates to the chains. Triangular pieces of wood are fixed to the top angle bar for the full length by ½ in. diameter bolts to prevent the small coal from getting under the edge of the plates.

Details of the gearing for working the suspended jib ends of the main picking belts are shown in figs. 799 to 807 (Plate LXXI.) The jib is balanced by two sets of weights and chains, the weights being made square and to fit between the flanges of the 12 in. by 6 in. uprights forming the columns of the building. A third chain fixed to the centre of the cross bar at the jib end is secured to a drum keyed to a cross shaft overhead, and raises or lowers the jib by being wound on or off, as the case may be, by means of the friction clutch and mitre gearing and the worm and worm wheel, the latter being keyed to the overhead cross shaft as shown. The method of balancing is particularly neat—the worm gear gives fixture of position, and the friction gear ensures smoothness and ease of adjustment. It would further be a simple matter to enclose the balance weights entirely with a light sheet iron casing.

In connection with this heapstead is a small coal storage bunker, the arrangement of which is shown in figs. 808 to 810, and details of the shoots in figs. 811 and 812 (Plate LXXII.) As will be seen, it consists of a lattice type girder elevator, built up with 3½ in. by 3½ in. by ½ in. vertical angle bars, 3½ in. by 3½ in. by ½ in. cross-angle bars, and 3 in. by ⅜ in. flat bar diagonal bracing. The buckets are 30 in. wide and attached to a skidder bar which slides upon the vertical angle bars. The two chains are also fixed to the skidder bars. The descending buckets are enclosed in a casing consisting of $\frac{3}{16}$ in. steel plating riveted to the angle bar. The bottom boot consists of a steel plate casing with cast iron sides, provided with tightening gear, hand holes being provided on each side. The buckets deliver the coal in the bunkers through a shoot made of $\frac{3}{16}$ in. steel plate and 2½ in. by 2½ in. angle bars.

The coal bunker is made up of ⅜ in. plates and 4 in. by 4 in. by ½ in. corner angle bars, 18 ft. square at the top and inclined on the underside from 3 ft. deep at the back to 13 ft. 6 in. deep at the front end. The bunker is further stayed by

three 1¼ in. diameter stay bolts, and three 6 in. by 3 in. by ½ in. T bars as shown. The front of the bunker is divided into three discharge openings, each provided with a slide to close them, details of which, together with the balanced and hinged extension shoots, are shown in figs. 811 and 812.

Figs. 814 to 818 (Plate LXXIII.) show details of construction of the elevator in connection with the small coal storage bunker illustrated in figs. 808 to 812. Fig. 814 is a section of the lattice type elevator, figs. 815 and 816 showing the boot. Fig. 813 shows details of the shoot.

The foregoing may be looked upon as typical examples of the general arrangement of screening plants, and will serve to show how the varied requirements of individual collieries—to some extent—may be met. In some cases, and these are in the majority, it is possible to concentrate the screening plant around or adjacent to the shaft head; in others, it is necessary to place the heapstead some distance away from the pit, necessitating the erection of gangways and long creepers to propel the tubs, and sometimes, where the distance is too great for creepers, an endless chain or rope. One advantage in placing the screens away from the shaft when the latter is the downcast—and which is now being recognised as of importance—is that the dust arising from the tipplers and screens is not carried on the air down the pit. But whether near the pit or away from it, the heapstead should be arranged so that from a certain point the tubs will gravitate to the tipplers where they will be discharged, and from the tipplers to another point, where they are raised automatically so as to gravitate back to the shaft. Usually the empty tubs are elevated, though often it is necessary to elevate the full ones, but in all cases it is worth a little extra trouble and expense to adopt some such arrangement.

The question of gradients is one which can practically only be determined by experiment, as it is difficult to get all ordinary colliery tubs, with plain cods and axles, to run equally well, as the friction of each separate tub varies considerably. Probably the easiest way of determining the co-efficient of friction of a colliery tub is to place the same on a level road, and pull the tub along by means of a small spring balance, noting the pull on the scale necessary to just keep the tub in motion; then

$$\frac{\text{Number of pounds pull}}{\text{Gross weight of tub}} = \text{co-efficient of friction,}$$

and for general estimating purposes this may be taken as 70 lb. per ton, or

$$\frac{70}{2{,}240} = \cdot 03 \text{ as the co-efficient of friction.}$$

The state of the road also influences this question, and it is advisable therefore to lay this with some care. The friction of tubs also depends upon the ratio of the

diameter of the axle to the diameter of the wheel, as well as the efficiency of the lubrication, and to enhance this, lubricators or greasers are often placed on the surface near the shaft to grease the axles before they commence running over the gradients. The co-efficient of friction of an ordinary tub axle revolving in a plain cast iron bearing may be taken as 0·2, and if

d = diameter of axle in inches,
D = diameter of wheel in inches,
F = resistance due to friction,
W = weight of tub in pounds,

then

$$F = W \times 0{\cdot}2 \frac{d}{D}$$

thus a tub weighing 5 cwt. and carrying 10 cwt. of coal, with axles $1\frac{1}{4}$ in. diameter and wheels 12 in. diameter,

$$F = 15 \times 112 \times 0{\cdot}2 \frac{1{\cdot}25}{12} = 35 \text{ lb.}$$

the same tub if fitted with 8 in. diameter wheels,

$$15 \times 112 \times 0{\cdot}2 \times \frac{1{\cdot}25}{8} = 52{\cdot}5 \text{ lb.}$$

which shows the importance of having the tub wheels as large in diameter as possible.

Fig. 819 shows an example of the gradients required on a heapstead where the gross weight of the tubs which were provided with 12 in. diameter wheels and $1\frac{1}{2}$ in. diameter axles, averaged between 17 and 18 cwt. The cages are provided with lifting bottoms to assist the starting of the full tubs, and a gradient of 0 25 in. per yard fall is continued to the weighing machine, where each tub has to be stopped and weighed. The gradient to No. 1 tippler varies between 2 in. and 0·875 in. per yard, the latter being such that the full tub would remain at rest, as it is sometimes necessary for a tub to stand, if for some reason the tippler has not completed its revolution. To No. 2 tippler the gradients vary from 0·25 to 1·5 in. per yard. The former dimension is just sufficient to keep a tub in fair running condition in motion after being started, but shortly before reaching the tub stopper the gradient increases to 1·5 in. per yard, and the tub if allowed to run uninterruptedly acquires sufficient momentum to displace the empty tub in the tippler. If, however, it requires to be stopped owing to the tippler not being in position to receive the tub, the gradient is sufficient to allow the tub to be self-starting. The gradients to No. 3 tippler, as will be seen, are somewhat reversed. Owing to want of space the tubs to No. 3 tippler have to be withdrawn by hand from the same side as they enter, consequently it is always a difficult matter to keep the cycle of operations exactly so that as fast as one tub is emptied and with-

drawn another is just reaching the point where it could be handled by the attendant. A gradient of 0·75 in. ensured even a bad tub running after being started, to a point where the gradient altered to 0·25 in., which enabled the tub to be easily stopped if necessary and to remain at rest. The empty tubs from Nos. 2 and 3 tipplers gravitate to one common creeper, and consequently part of the outside rail of the curve leading from No. 2 tippler is removed to allow the tub from No. 3 tippler to run to the creeper, and a check rail is provided to make up to some extent the deficiency of the outer rail. A much greater gradient is of course necessary when tubs are passing round curves and over switches and crossings. In this case, gradients of 1·25 in. and 1·375 in. per yard for radii of 8 ft. and 7 ft.

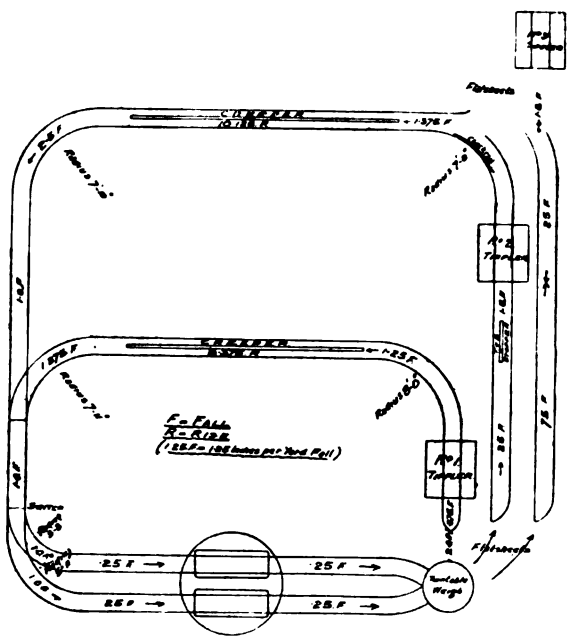

FIG. 819.—DIAGRAM OF HEAPSTEAD GRADIENTS.

respectively were found to give satisfactory results. Although the curves from the creepers are practically the same radii, the gradients around these, as will be seen, are 2·5 in. and 1·375 in. per yard, the remainder of the gradient being 1 in. fall per yard up to the shaft landing, where it is reduced to 0·25 in. per yard. The leading-in switch is controlled by an attendant, and the reason for giving a heavier gradient to the curve leading from No. 2 creeper was to ensure a bad tub acquiring sufficient momentum to bring it not only around this curve, but also along the straight portion to within reach of the attendant.

In consequence of the very unequal frictional resistance of pit tubs, it is always a more or less difficult matter to adjust the gradients to ensure smooth running, as a gradient that will suit a bad tub is, of course, unsuitable for a tub in good running order, and this point raises the question of whether self-acting tipplers really result in any economy from a labour-saving point of view. By a self-acting tippler is meant a tippler which is put in operation by the on-coming full tub displacing the empty one, which in turn starts the tippler in motion, and it is easily seen that for such a system to work efficiently *every* tub should be in good running order, a condition somewhat difficult to ensure at a very large colliery without increasing the cost of supervision and repair.

Knowing the co-efficient of friction, the gradient necessary for any given distance may easily be calculated from the equation

$$C \times W \times D = W \times H,$$

from which

$$H = \frac{C \times W \times D}{W},$$

where C = the co-efficient of friction,
W = weight of tub in pounds,
D = distance in feet to be traversed,
H = vertical height of fall in feet.

Thus the gradient will be

$$\frac{H \times 36}{D} = \text{rise or fall in inches per yard.}$$

Frequently, however, conditions are such that the gradients cannot be arranged just as one would like them. For instance, the space available for a "down" gradient may be only such that the tub would gain excessive speed, in which case it is necessary to provide some braking mechanism. An "up" gradient is different, as the tubs are moved by mechanical means, and the only point which requires attention on a short steep gradient is so to design the creeper chain and hook that the tub will not slip. A simple brake for a down gradient consists of two angle irons inside the rails arranged to press against the inside of the flange of the wheel either by weights or springs, so that as the tub passes they grip the flange of the wheels. At Newbattle Colliery a very simple brake consists of a long endless creeper chain resting upon the floor, and passing over a roller at each end. The braking action consists of the weight and friction of the chain resting upon the floor, which the tub has to put in motion. By the addition of a simple brake rim and strap such a brake might be efficiently controlled from a distance. Another braking action consists of removing the rail on one side, and replacing it by a plate upon which the flange of the wheel rolls, so that while one wheel on the same axle rolls upon the "tread" the other wheel rolls upon the larger diameter flange. Both

wheels must, of course, be fixed to the axle, and a check rail is provided to guide the tub. Considering all the various points in connection with the running of tubs, and the expense sometimes attached to arranging the various gradients, it becomes a question as to whether it is not advisable to keep the roadways nearly level, and to propel all the tubs by means of a lightly constructed creeper, consisting say of prongs attached to a wire rope. Such a creeper might be arranged to pass around curves.

Creepers are constructed in various ways, but in all cases they should be made as light as is consistent with the work they have to do. An excellent type of creeper

FIG. 820.—CHAIN BELT COUPLING.

chain, made by the Chain Belt Engineering Company, is shown in fig. 820. This consists of malleable cast iron open links, attached together by a bolt with the head partly cut away, so that by merely turning it a quarter turn it may be withdrawn. The single links are approximately twice the width of the double links, and, as shown, the horns which engage with the tub axles are double. They may, however, be obtained with the horn to take the place of the single link, which is sometimes an advantage, especially if the coupling attached to the tub is at the leading end. This chain, which has a working strain of 3,000 lb., should run on rollers fixed between the rails, and packed with wood covered with a thin iron plate between the rollers to prevent it sagging, and consequently slipping off the tub axle. Other chains are made which simply slide on angle bars or a channel iron, and are often unnecessarily heavy. Such an arrangement is obviously

built on wrong lines, as the friction is considerable, and consequently power is wasted. Probably the best arrangement is to have a double chain with rollers between, the whole moving together.

The horse-power required for working a creeper chain may be obtained from the following formulæ, where

W = total weight of tub and chain in pounds,
N = number of tubs on incline,
C = friction in pounds,
H = height in feet to which tubs are to be raised,
L = length of incline,

then

$$\frac{N \times W \times H \times C}{L} = \text{strain S on chain;}$$

and

$$\frac{S \times \text{feet per minute}}{33{,}000} = \text{horse-power required.}$$

The friction will vary between 0·2 and 0·4, depending upon the type of chain used.

Where the tub runs to the creeper incline it is usual to provide some arrangement to prevent the tub running back before it is caught by a horn on the chain. This may consist of a spring chock, or a star wheel, and ratchet. A very simple and effective device by Messrs. Campbell, Binnie and Co., consists of a row of pivoted and overbalanced fingers between a pair of plates, over which the axle runs, the number of fingers being arranged and spaced to suit the best and worst average running tubs. Thus, if a tub runs well it reaches the furthest away finger, and is held there; whereas in the case of only a single stop, which has to be placed in such a position that a bad running tub will pass over it, a good tub over-runs the stop and then drops back. On heavy gradients it is also sometimes advisable to have a few similar stoppers, spaced over the length of the incline to prevent tubs running back in case they slip. With, however, a well-designed creeper such an arrangement is probably an unnecessary refinement. Other devices used in connection with creepers are means to throw over to one side the coupling chain when this is on the leading end of the tub to prevent the horn catching the coupling instead of the axle. Creeper chains are driven by sprocket wheels or drums specially made to suit the chain, one end being provided with sliding carriages and tightening screws.

Where the full tubs are fed into the tippler by a creeper, as is sometimes necessary, a friction clutch is provided, worked by the tippler attendant, who may thus stop the supply should the tippler be stopped. In this case some arrangement should be provided to prevent the full tubs running back, if on an incline.

Probably no colliery appliance has received more attention than the tub "tippler," and many ingenious mechanically-operated tipplers have been put forward. Figs. 821 and 822 show two types of "kick-ups" in which the tub is tipped end on, the latter being provided with a brake, whilst figs. 823 and 824 show a kick-up similar to fig. 821 *in situ* on a bar screen. The objection to these is easily seen, especially with the type shown in fig. 822, as the coal not only leaves the tub at a high velocity, but has some distance to fall, the result being that it quickly traverses the length of the screen, decreasing the screening or separating efficiency, and, with soft coal, breaking it up. As before mentioned, however, the screens are often useful in certain circumstances, and, in designing the kick-up, care should be taken to render the fall as small as possible. The screen shown in fig. 823 is set parallel to the railway, which is an awkward arrangement if the small has to be removed, as the truck receiving the large coal fills before the one behind it receiving the small, necessitating frequent shunting operations. It is provided with a hinged door worked by a lever and handle, so that the coal may be kept back or allowed to slide down the screen at a slow rate. To save the coal as much as possible, the kick-up is provided with a hinged door on the top provided with catches, which are automatically opened when the tub is tipped, so that no coal is allowed to fall until in this position. These end tipplers or "kick-ups" are pivoted, so that the centre of gravity of the full tub is slightly above the centre line of the pivot, and consequently it moves over with a slight push and returns automatically, the centre of gravity of the empty tub being below the pivots. Another form of tippler consists of two wrought iron or steel rings connected together by the rails and tie bars, which rest upon a rack consisting of an angle iron with teeth cut in the vertical web. On the outside of the rings pins are provided which gear with the slots in the rack. The tub is placed in the tippler, which is then rolled over by hand. This forms a very simple tippler, but requires space equal to half the circumference of the rings.

The power required to drive a revolving tippler may be obtained from the following formulæ:—

$$\text{B.H.P.} = \frac{\left(\frac{W}{g} + F\right) \times C \times 60}{T \times 33{,}000.}$$

Where

W = total weight of tippler, tubs and coal in pounds,

g = 32·2,

C = circumference of tippler ring in feet,

T = time in seconds required for one revolution,

F = friction.

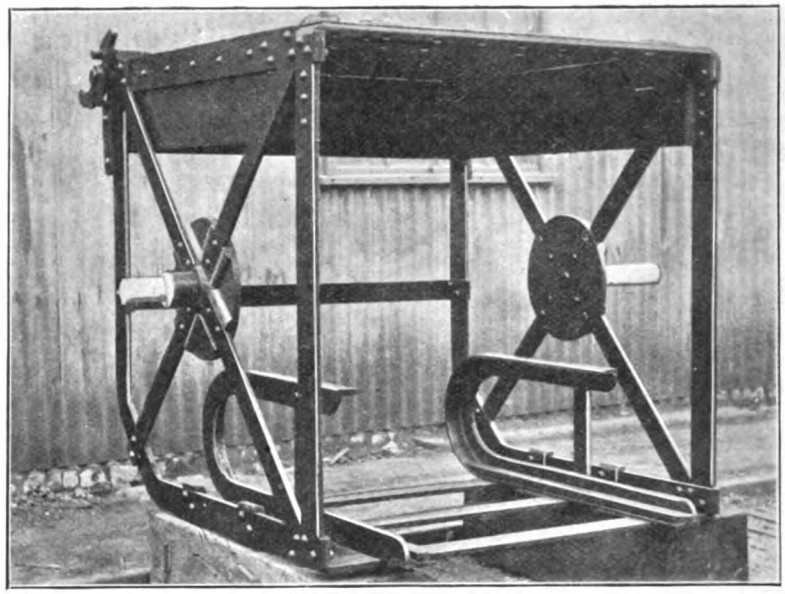

FIG. 821.—END TIPPLER.

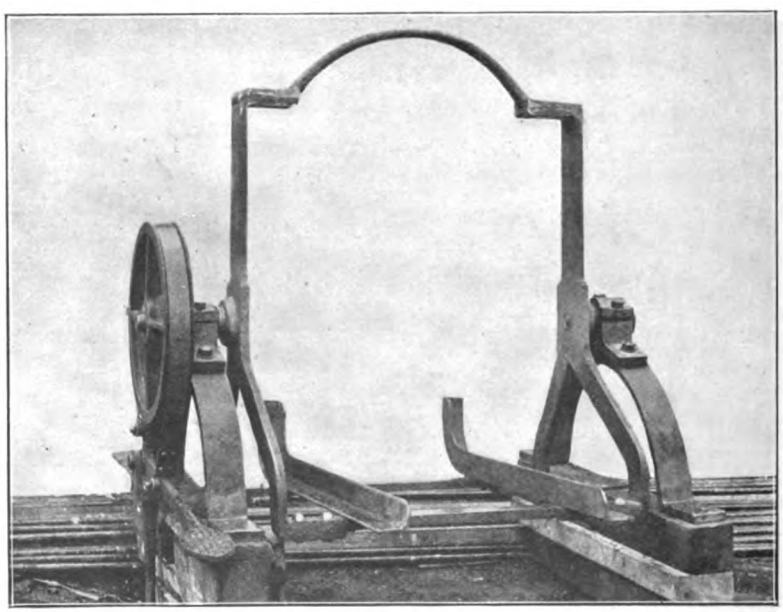

FIG. 822.—END TIPPLER.

The friction will depend upon the ratio of the diameter of the friction wheel shaft to the diameter of the friction wheel, and if

D = diameter of friction wheel in inches,

d = diameter of shaft in inches,

then

$$F = \frac{W \times 0{\cdot}1 \times d}{D}$$

This will give the brake horse-power required at the tippler friction wheel shaft, and the actual horse-power will, of course, be increased by some 10 to 20 per cent., depending upon the driving arrangement.

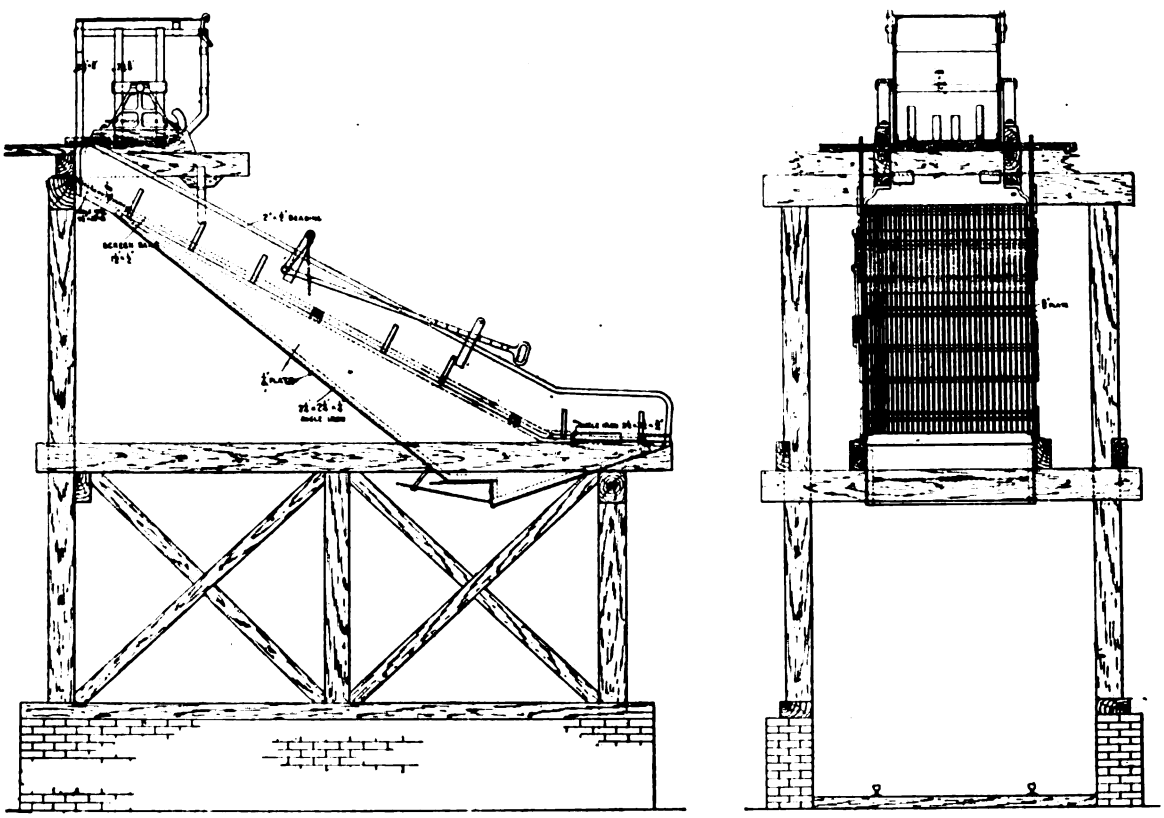

FIGS. 823 AND 824.—END KICK-UP AND BOX SCREEN.

Rigg's patent tippler, shown in figs. 825 to 828 is provided with an upright plate which receives the coal as it is discharged from the tub, as shown, and upon which it rests until nearly in line with the screen bars. To retard further the delivery of the coal, a balanced hinged door is also provided as shown. As will also be noticed, a small drop is arranged between the receiving plate of the screen

and the bars, causing the coal to roll over, so that any small coal on the top of the large pieces is discharged upon the screen instead of being carried into the large coal wagon.

End-on tipplers are not suitable for quick discharging, as time is occupied in withdrawing the tub. They may, however, be power-driven, such a one by Messrs. Jos. Cook, Sons and Co. Limited being shown in fig. 829, which is also automatic in its action. By far the greatest number of tipplers in use are power-driven side-tipplers, in which the tub passes straight through.

In designing a tippler, the aim should be to secure quick action and gentle discharge of the coal, without complicated machinery, not always easily attained, as is evidenced by the number of various devices which have been proposed. Probably the simplest, and certainly the most popular, means of operating tipplers is that shown in figs. 660 and 661, though not always arranged as there shown. Another arrangement of tippler drive by Messrs. Jos. Cook and Sons Limited is exemplified

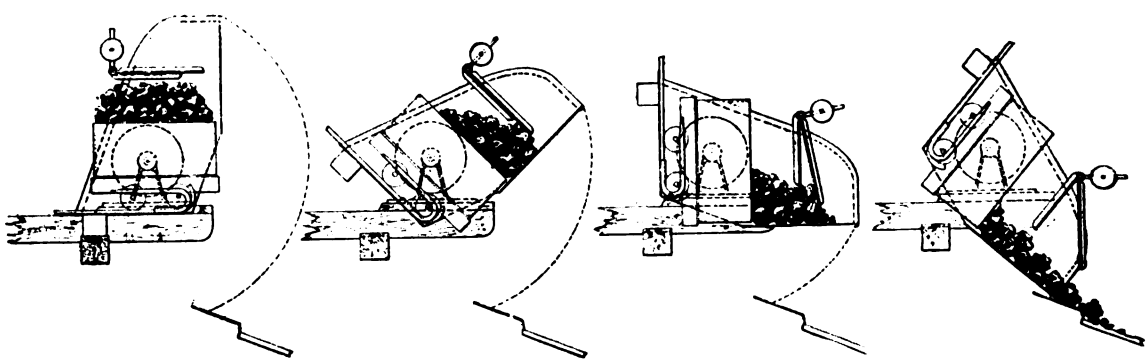

FIGS. 825 TO 828.—RIGG'S PATENT TIPPLER.

in fig. 830, which shows a tippler adapted for two tubs. In this arrangement a friction wheel connects the driven wheels to the wheels carrying the tipplers, the friction wheels being controlled by means of the lever, as shown, which, however, involves an additional shaft and rollers.

A very neat friction drive is that by Messrs. Sylvesters, shown in figs. 831 and 832. Here the tippler is carried upon four friction wheels, two of which are always in motion. In front of the driven roller, however, is a loose roller, rather larger in diameter than the friction roller—as shown in the enlarged section—and fixed to the tippler ring is a block arranged to roll on the loose roller and working against the stop, as shown in fig. 831. To start the tippler the stop is depressed and the tippler commences to roll on the loose rollers, which brings it into contact with the driven friction wheels, and on completing the revolution the

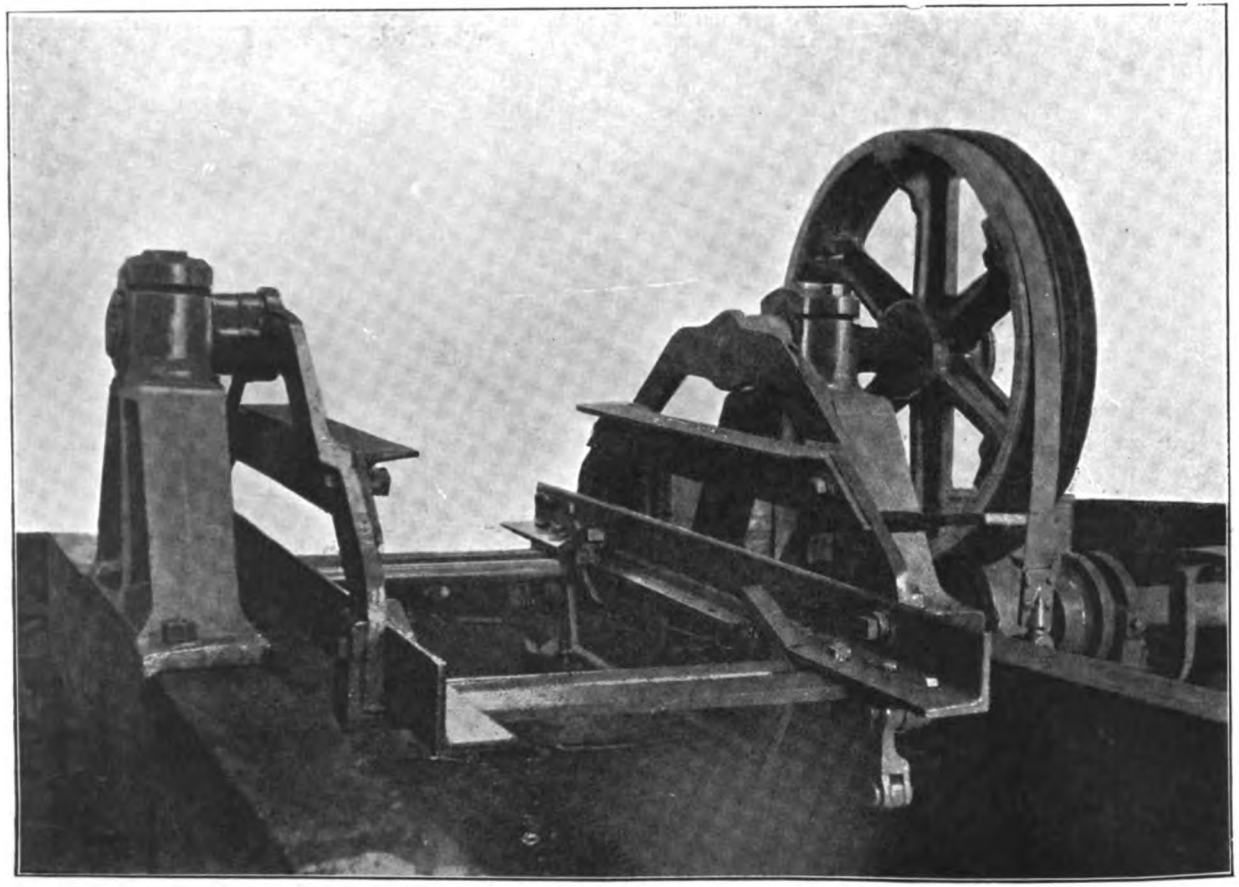

FIG. 829.—COOK'S AUTOMATIC REVOLVING END TIPPLER.

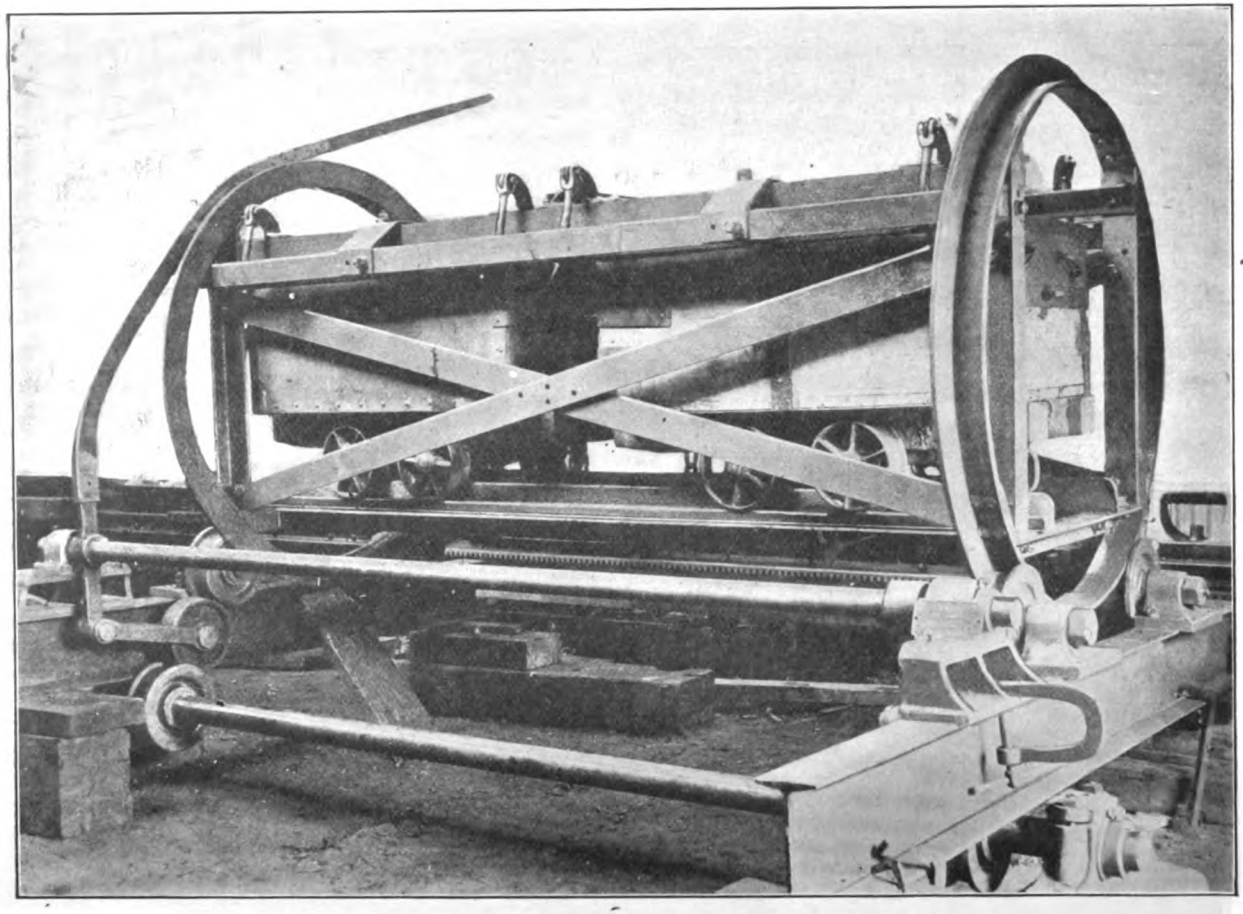

FIG. 830.—COOK'S TWO TUB TIPPLER WITH FRICTION GEAR.

block again comes into contact with the loose rollers, thus lifting the ring off the friction wheels, and the momentum contained in the mass is sufficient to complete the revolution and bring the block up against the stop. As shown, the tub is held in position by plates projecting over the top, but another method of securing the tubs by the axles is shown in fig. 833, which, however, has the objection that the tub has first to be pushed forward and then pulled back a little.

Another tippler by Messrs. Heenan and Froude Limited, on the same principle

FIG. 831. FIG. 832.

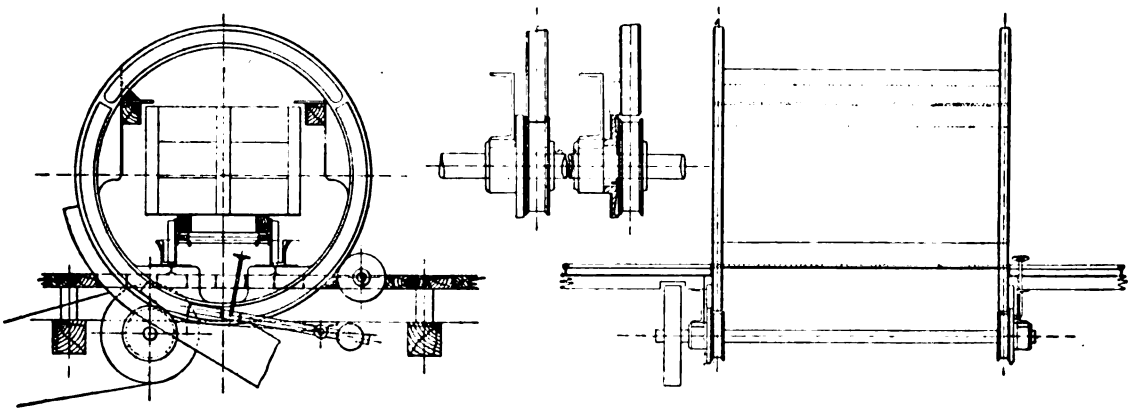

FIGS. 831 AND 832.—SYLVESTER'S TIPPLER.

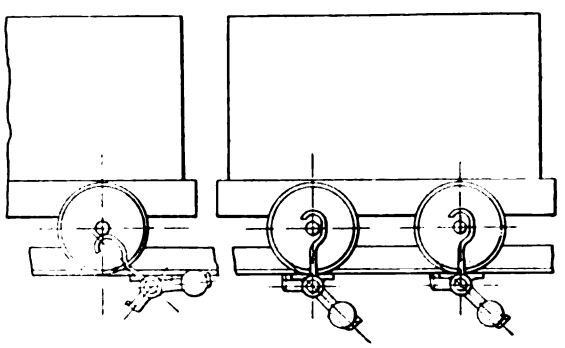

FIG. 833.

as that shown in figs. 660 and 661, but much more neatly arranged, is shown in fig. 834. This is a large tippler for a South Wales colliery, and, as is usual, is provided with a door (in this case balanced) which is cut diagonally across merely in order to reduce the size of the balance weight required.

Messrs. Campbell and Binnie's patent belt-driven tippler, shown in figs. 835 and 836, has several points in its favour. The tippler is supported upon four

friction wheels, two of which are driven by means of a belt, the shaft being provided with fast and loose belt pulleys. By pulling over the handle, shown on the right in fig. 836, which also withdraws a stop, the belt is moved from the loose pulley to the fast one, where it remains until the revolution is nearly completed, when the roller, shown on the left in fig. 836, comes into contact with the projection on the tippler ring, which throws the belt on to the loose pulley, and replaces the handle and stop, thus bringing the tippler to rest. The belt gives a very steady

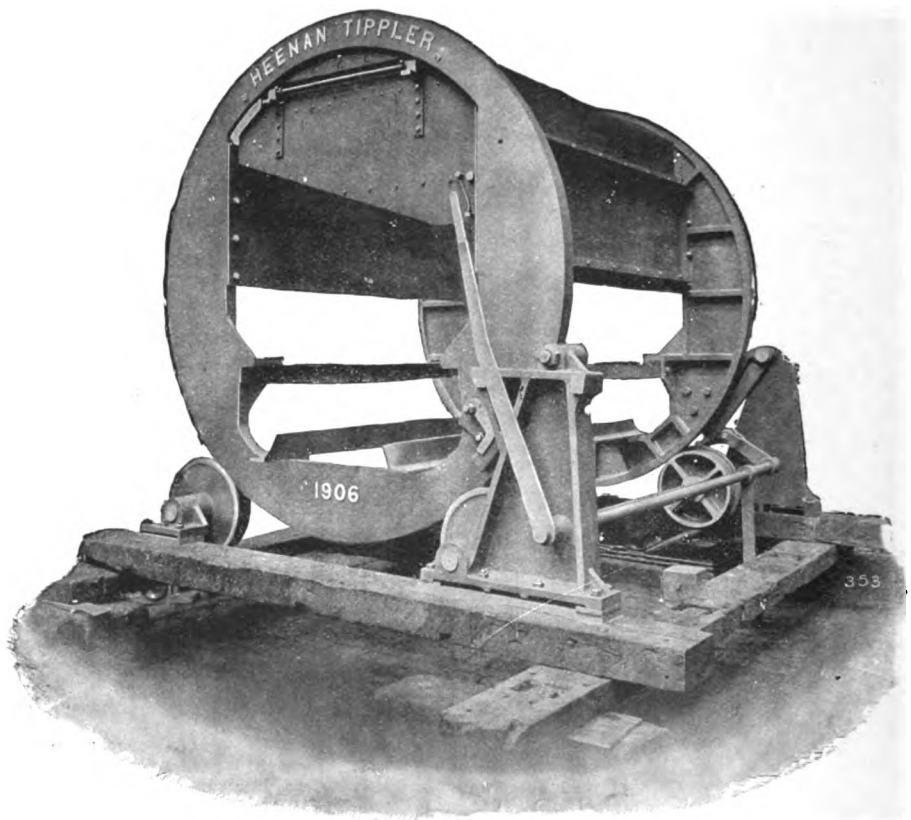

FIG. 834.—HEENAN AND FROUDE TIPPLER.

drive, and the starting slip occurs between the belt and belt sheave instead of between the friction roller and tippler ring, thus preventing the excessive wear on the latter which takes place at the starting point. Another point of interest is the means adopted to keep the tub in position. This consists of a ⊥ bar arranged to slide in a box fixed to the side of the tippler, so that as the tippler revolves the

Fig. 835.

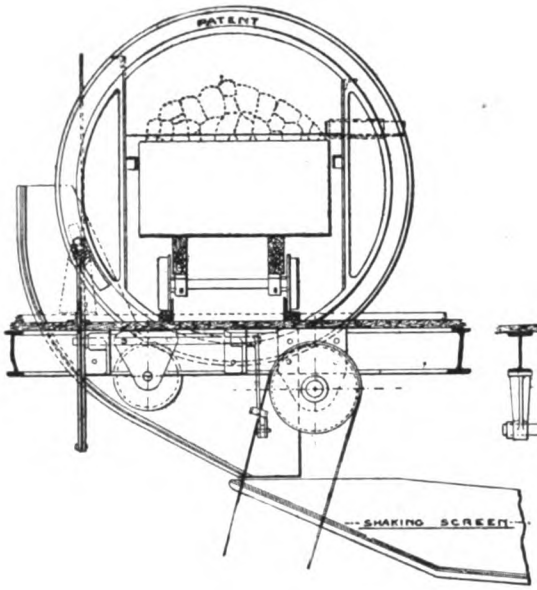

Fig. 836.

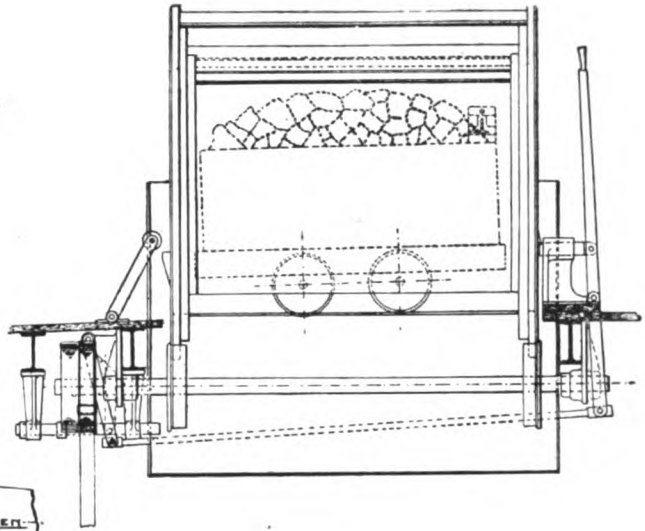

Figs. 835 and 836.—Campbell, Binnie and Co.'s Patent Belt-driven Tippler.

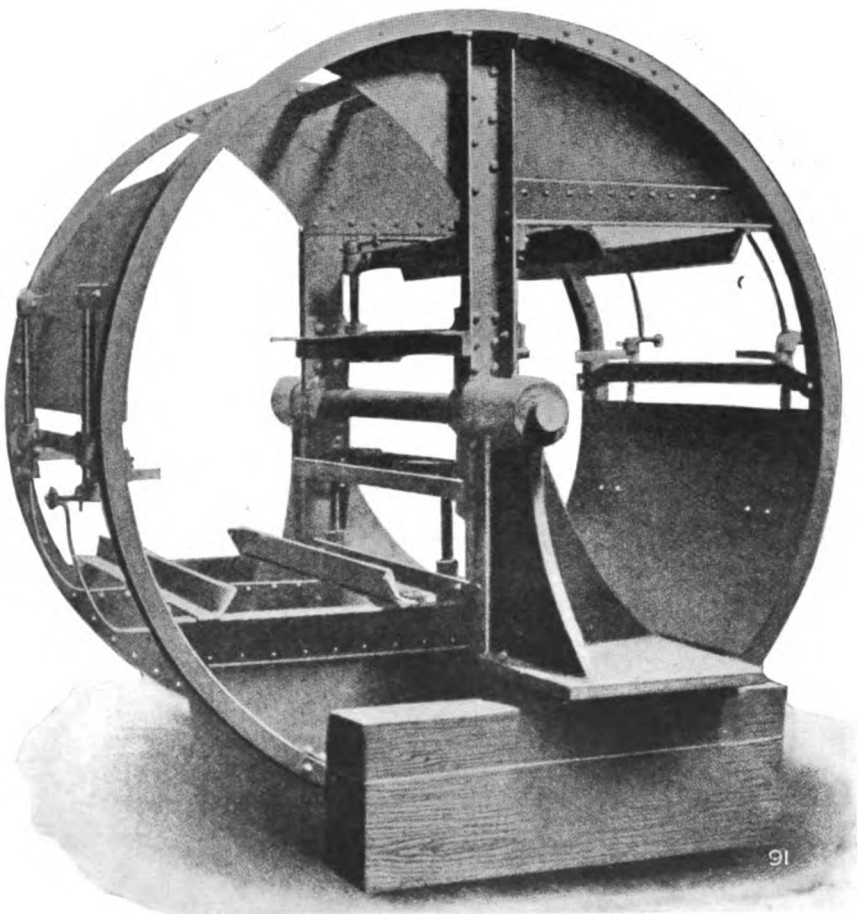

Fig. 837.—Heenan and Froude's Two-way Gravity Tippler.

FIG. 838.

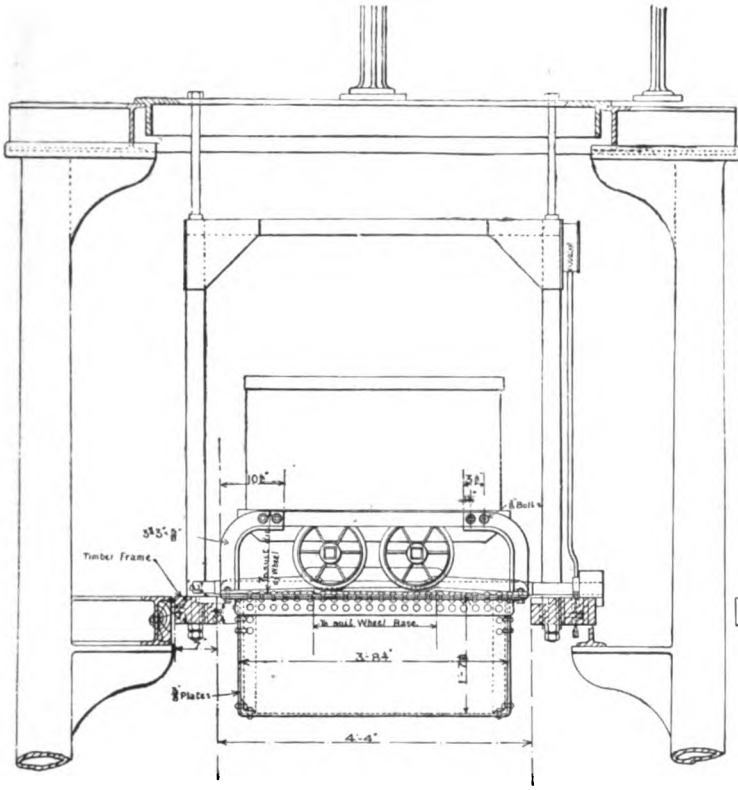

FIG. 839.

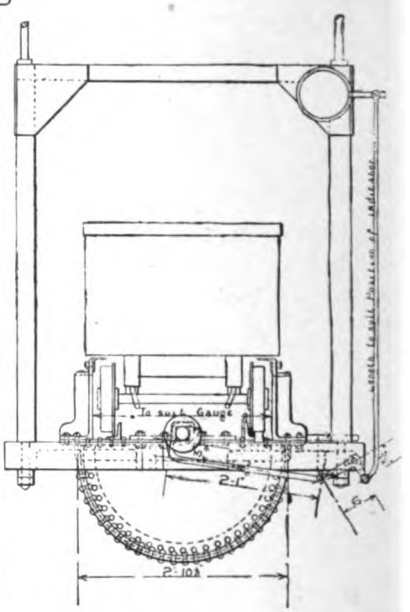

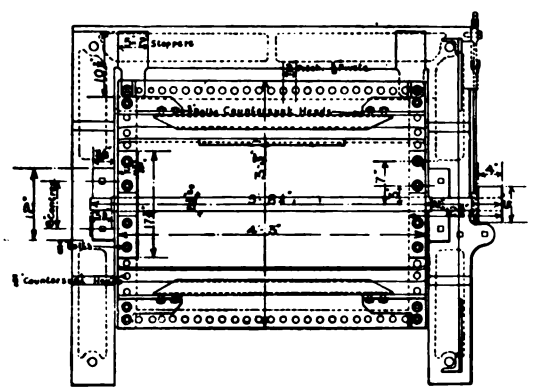

FIG. 840.

FIGS. 838 TO 840.—TATE'S PATENT WEIGHING AND RECORDING TIPPLER.

⊥ bar slides over the top of the tub on one side, which, together with the side bars which fit closely to the side of the tub or hutch, keep it in position when inverted.

A two-way gravity tippler, by Messrs. Heenan and Froude, is shown in fig. 837. In this case the weight of the full tub causes the tippler to complete half a revolution, when, having discharged the coal, it is in a balanced condition, with one empty tub inverted on the right-hand side, and another empty one on the left-hand side. In this tippler special fingers are arranged to secure the tubs by means of the buffers. These tipplers are sometimes constructed to carry four tubs, and though requiring no power to operate them, they occupy considerable space.

An extremely interesting gravity tippler is that invented by Mr. Simon Tate, and which has been in successful operation at East Hetton Colliery for very many years. This is shown in figs. 838, 839, and 840, and combines the operations of weighing, tipping, and registering the number of tubs passing over the tippler. It consists of a frame suspended from the weighing machine in which the tippler revolves upon a shaft working in two end bearings. Below the shaft is a semi-circular box of wrought iron filled with some heavy fluid such as tar, so that with an empty tub in position the centre of gravity of the mass is below the point of suspension, and with a full tub above. Thus, when a full tub is placed upon the machine it first depresses a short lever which, acting through the bell crank and other levers, operates the automatic counter shown on the right in fig. 839; it is next weighed, and after the weight is recorded by the weighman, a slight push overturns the tub, the rate of turning being regulated by a band brake and a pedal lever—not shown on the drawing; after being discharged returns to its original position, when the tare weight of the tub may be taken. The whole operation occupies only a few seconds, and is remarkably simple and effective; it occupies but little room; can be operated to give a slow and gentle discharge and a quick return; and the counter is a reliable check of the number of tubs drawn, showing at once the output at any period during the day.

In order to prevent breakage of the coal by too quick a discharge, tipplers have been designed to give a slow forward motion and a quick return. In Everett's tippler—which is driven by means of a worm and worm-wheel, the latter being secured to a shaft fixed between the rails and parallel with them—this is obtained by means of a bent crank fixed to the worm-wheel shaft and connected to the front or end of the tippler by a connecting link. This starts with a medium speed, which gradually decreases until the point of tipping is reached; after passing this point the speed quickly increases and slows down again towards the stopping point. In Turnbull's tippler the slow and quick motions are obtained by means of two rings, one larger in diameter than the other, and two rollers of different diameters at each end of the tippler. At starting, the small diameter rings rest

upon the large rollers, but after partly turning, the large diameter rings come in contact with the small diameter rollers owing to the periphery of the former being thickened up at this point, and continue turning upon these until the coal is discharged, when the small diameter ring and large diameter roller again come in contact, completing the revolution at the same speed as at the commencement.

Rigg's patent power-driven side tippler shown in figs. 841 to 845 does not make a complete revolution, but oscillates with a slow forward motion and a quick return in the opposite direction. This is obtained by means of a semi-circular rack upon the tippler ring, represented by a thick dotted line in the drawings, which gears with a wheel upon the shaft carrying the tippler friction wheels, or in this case supporting rollers, as the tippler is positively driven. Upon this shaft is mounted a pinion which gears into the sector worked by an arm coupled to the crank on the first motion shaft by the connecting rod as shown in fig. 841. As the crank turns, it pulls around the sector by means of the connecting rod, and the speed of rotation depends upon the relative positions of the cranks and connecting rod. Thus the time occupied in making the forward motion is that necessary to make nearly three-quarters of a revolution of the driving crank, as shown in figs. 841 and 844—where the starting and finishing positions of the crank are shown—for the tipping motion, and one-quarter of a revolution for the return motion. Further, the tipping motion has a varying velocity, first comparatively slow at the start, then quicker, finally slowing down as the coal is discharged upon the screen. Further, to save the coal the tippler is provided with a hood and balance weight.

An automatic tippler by Messrs. Jos. Cook, Sons and Co. Limited is shown in figs. 846, 847 and 848. In this case, as the full tub moves forward it depresses the bent lever A, which, acting through the levers C and D, withdraws the stop E, allowing the empty tub to be pushed out. A balance-weight W restores the lever A to its normal position, and a spiral spring restores the stop E, the latter, together with the lever D and spring, being attached to the tippler and moving with it. As the empty tub moves forward it in turn depresses the lever B, which, acting through the levers as shown, withdraws the catch, allowing the tippler ring to drop on to the driven friction wheels, thus starting the tippler in motion. The lever B and catch are restored by the balance-weight S, and the tippler comes to rest with the stop against the catch. Fig. 849 shows two of these tipplers on the heapstead at Hylton Colliery. The object in adopting automatic tipplers is to reduce the labour required to attend them, which would no doubt be satisfactory provided all the tubs would run equally well, but where this is not the case and labour has to be employed in order to attend to the bad tubs, it is questionable as to whether the extra capital and cost of upkeep are justified.

Fig. 841.

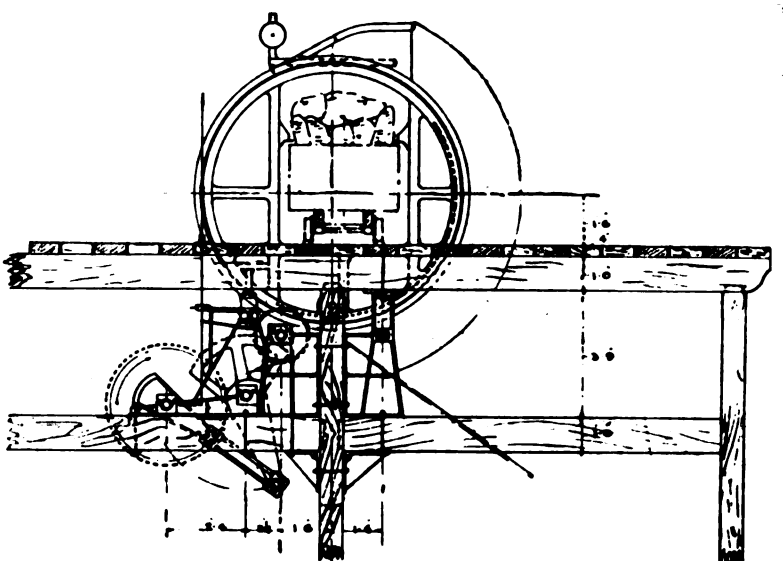

SIDE ELEVATION WITH TIPPLER BODY 'UP'

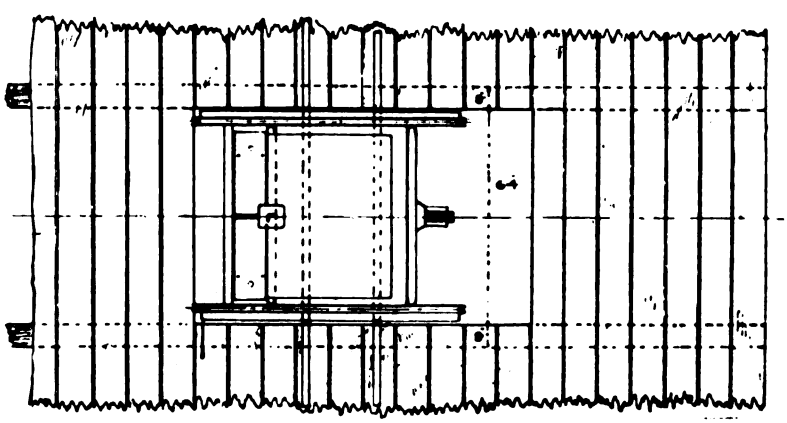

PLAN.

Fig. 842.

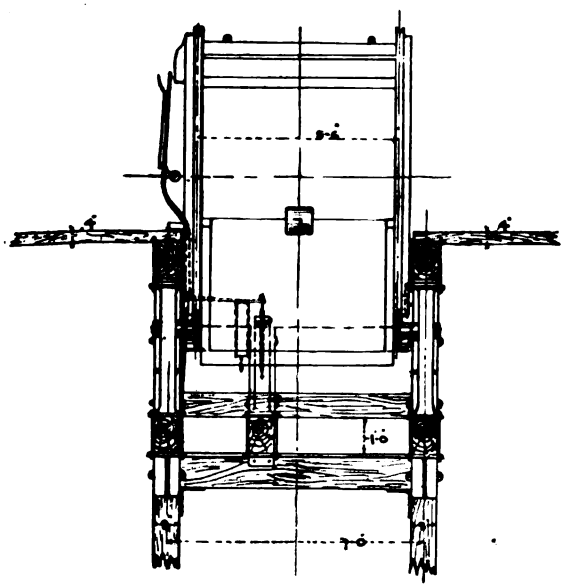

FRONT ELEVATION.

FIG. 843.

FIG. 844.

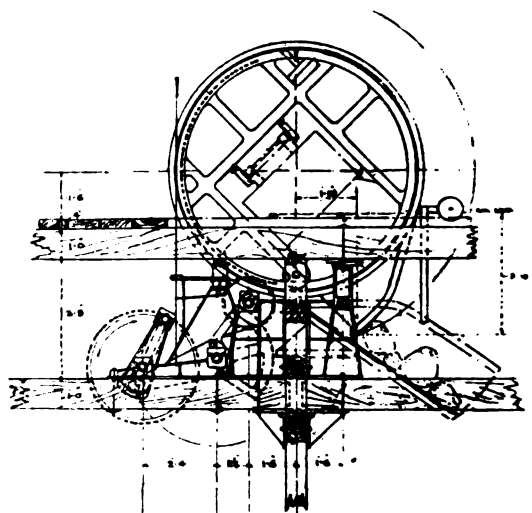

SIDE ELEVATION WITH TIPPLER BODY DOWN

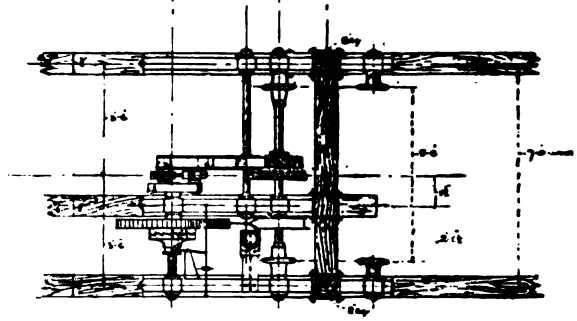

PART PLAN SHEWING MACHINERY.

FIG. 845.

It has already been shown that to tip coal from a tub, end on, on to a screen without some means of preventing the coal being thrown forward is not only detrimental to the coal, but lessens the efficiency of the screening. The same will apply to side rotary tipplers if they are made to revolve towards the screen, and for this reason they are usually arranged to turn backwards, a circular plate being arranged to receive the coal, but unless these are carefully constructed, much trouble ensues from the spilling of the coal, and further, the large lumps frequently get wedged between the plate and edge of the tub, breaking them up, which is most undesirable if the large lumps are to be preserved. To avoid these troubles, the tippler should be provided with a hood, which accurately fits close to the circular extension of the screen, so that the coal

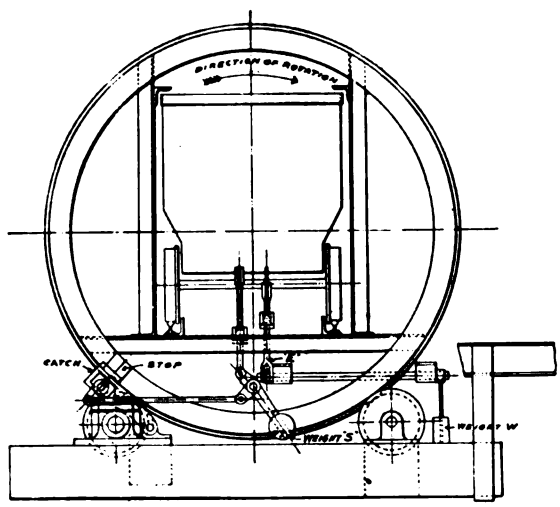

FIG. 848.—COOK'S AUTOMATIC TIPPLER.

is first received in the hood and gradually discharged upon the screen. They should, further, turn as slow as possible. The time available for the revolution of each tippler,

$$t = \frac{180 \times w \times T \times N}{W}$$

where

t = time in seconds required for one revolution,
w = capacity of tub in cwt.,
T = hours worked per day,
N = number of tipplers,
W = total tons raised in T hours,

but to give a margin for stops, &c., rather less than this time should be allowed as a maximum. Many tipplers revolve too quickly, with the result that they are

Fig. 846.

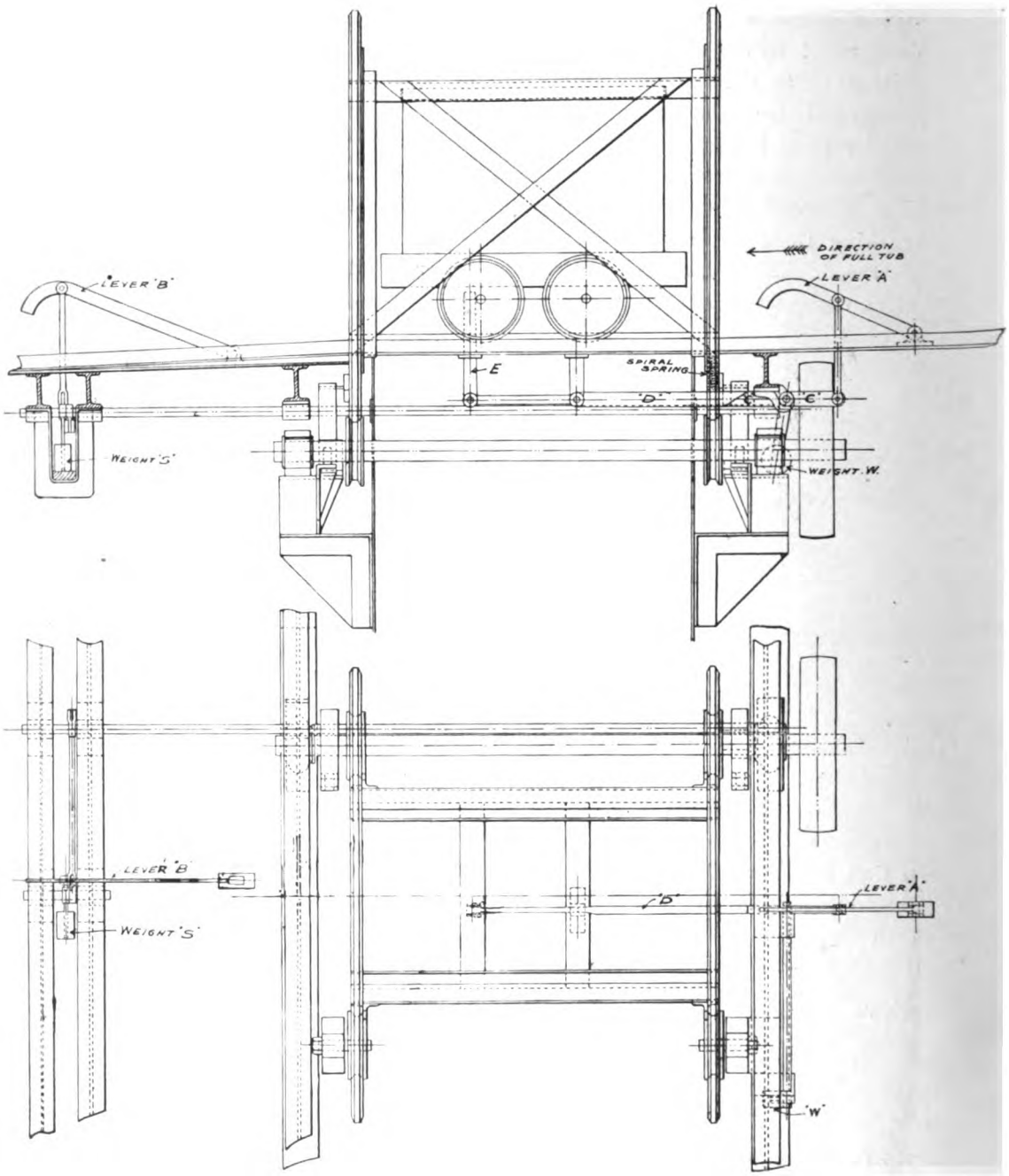

Fig. 847.

Figs. 846 and 847.—Cook's Automatic Tippler.

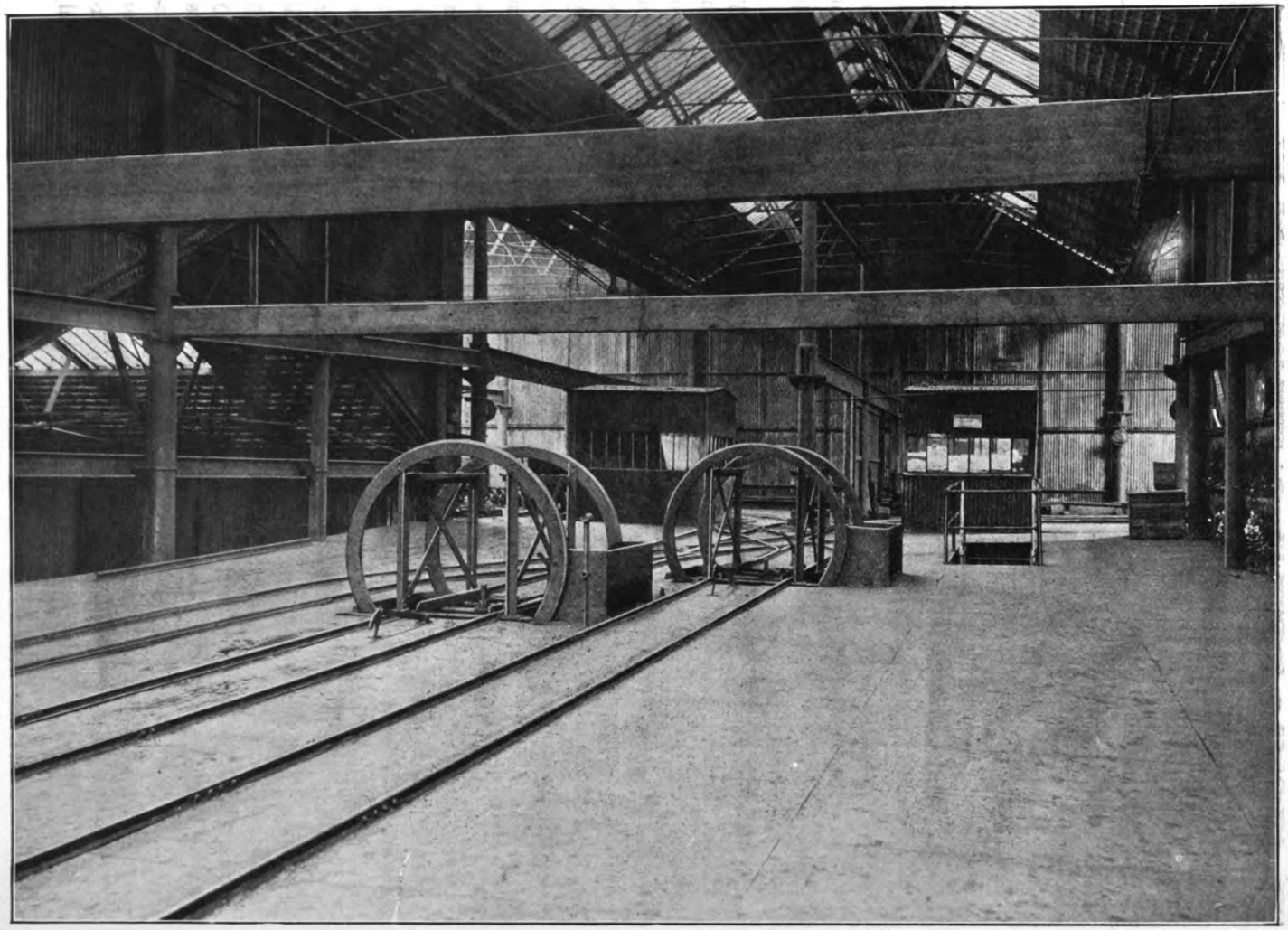

FIG. 849.—COOK'S AUTOMATIC TIPPLER AT HYLTON COLLIERY.

standing a number of seconds between each tub, whereas if a little longer time were occupied in turning, less breakage, and consequently increased value, of the coal would result. It is an easy enough matter to make a tippler discharge, say, 1,000 tons per day, but if this rate lowers the selling price of the coal, the cost of an extra tippler and screen to reduce the quantity dealt with and enable it to be handled more gently would soon be repaid.

Probably the most efficient means of distributing the coal over the screen is a short travelling belt, and a strong rubber, cotton, or other belt running over plain cylindrical wood-lagged rollers, with the tension screws at the back end, is most suitable, as the screen plate may be arranged close to the belt, thus preventing the fall which is unavoidable with a steel plate belt passing over hexagonal drums. Other means consist of "backing" rollers as shown in fig. 662, and another arrangement consists of smooth plate jigging screens set at a small inclination, which has the advantage of ensuring the coals being spread over the plate in a thin layer. A "backing" roller, however, tends to break the coal. A hinged trap is objectionable, as it is not automatic.

Another method of distributing the coal is shown in fig. 850, as made by Messrs. M. Coulson and Co. In this arrangement the top part of the screen which receives the coal is hinged and balanced by means of levers and weights. When empty, the receiving plate is in the position shown by the dotted lines, with a maximum inclination. When, however, a tub of coal is tipped, the weight of the coal overbalances the dead weight and the inclination is reduced, which gradually increases as the coal is jigged on to the screen.

Where bar screens are in use they must, of course, be set at such an inclination that the coal will slide down, and in order to reduce this inclination, it may be desirable that as the coal leaves the tippler it should have some slight impetus given to it, in which case no distributing arrangement is necessary; the coal, however, is always more or less in a heap. The inclination of bar screens varies between 1 in 2 and 1 in $1\frac{1}{4}$. It is also necessary sometimes to alter the distance apart of the bars, depending upon the size of coal required, and for this purpose the bars are often held in a "comb" instead of being threaded on to round rods. This "comb" is made square, and fits into shoes or recesses on the sides of the screen, and by forming different pitches on the four sides of the square bars, all that is necessary to be done is to remove the bars, turn over the combs and replace the bars. Another method is to carry the bars upon notches cut in each end resting upon round rods fixed to the screen sides, so that the bars may be lifted out. To alter the mesh or width apart, washers shaped like a horseshoe and about $\frac{1}{8}$ in. in thickness, which are easily dropped over the round rods, are added or removed, according to the width of space required.

PLATE LXXIV.—(*To face page 382*).

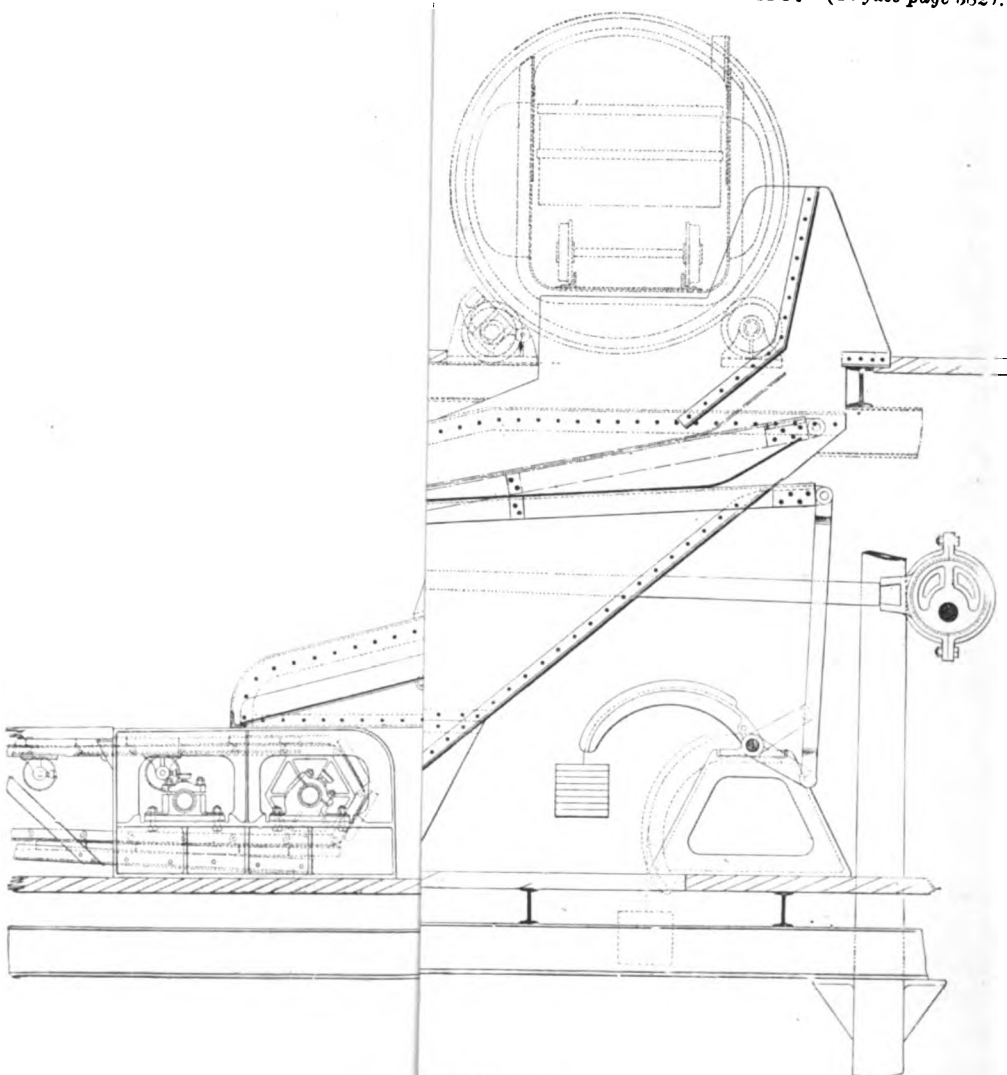

RRANGEMENT.

To avoid the loss of time required to remove and alter the bars, Messrs. Guinotte and Briart introduced in Germany screen bars mounted on screwed sleeves or nuts, which engage with right and left hand screws in the form of a sleeve, which are threaded and fixed by a pin upon the spindle passing through the side plates of the screen. By rotating this spindle the bars are brought closer together or further apart as required. The arrangement, however, is somewhat complicated, and therefore costly, and it is questionable, unless it is necessary to frequently alter the bars, whether the initial expense is justified.

Rigg's curved balanced screen, shown in figs. 851 and 852, is mounted upon a strong square shaft provided with a brake wheel and lever, upon which it oscillates. As shown in fig. 851 the screen is in position for receiving the coal, which slides down the greater inclination and rests upon the flatter portion, where all dirt and

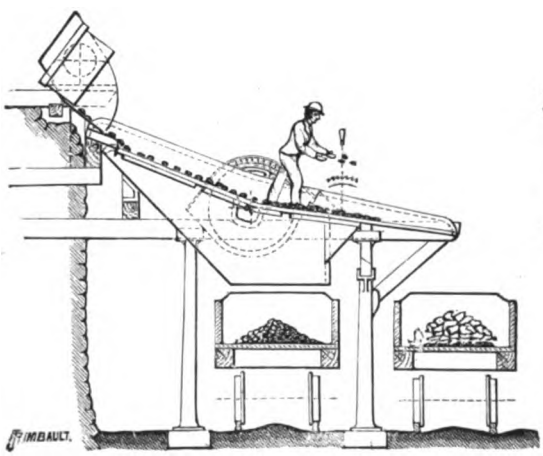

FIG. 851.

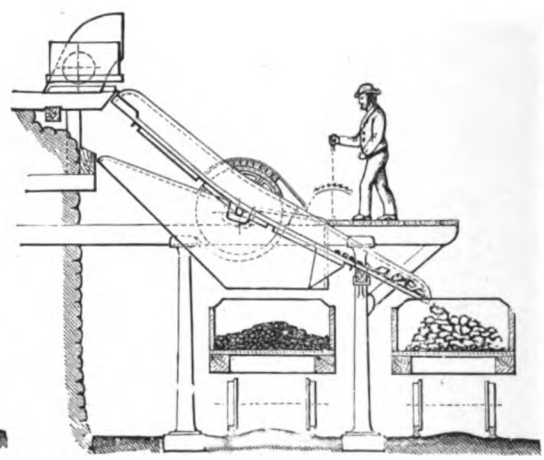

FIG. 852.

foreign matter may be removed by hand. In this position the weight of coal is sufficient to overbalance the screen, and on releasing the brake it moves into the discharging position shown in fig. 852. A balance weight at the upper end ensures a return of the screen to its original position.

Another objection to bar screens, in addition to those already mentioned, is that long flat pieces of coal pass through the bars, and often a considerable quantity of small which should be separated is carried on the large lumps. Further, if the bars become rusty or the coal is wet, it sticks and has to be raked down.

For these reasons, and in order to effect a thorough separation, and yet handle the coal with some gentleness, various forms of movable bar and vibrating or jigging screens have been introduced, and considerable ingenuity has been exercised

in the attempt to produce a perfect screen, which has yet to be invented. The perfect screen must effectually separate the small from the round, prevent any abrasion of the large lumps either against each other or on the screen itself, have a small inclination so as to reduce the height of the heapstead, require a minimum of power for its operation, it must be comparatively cheap in its first cost, and be so constructed as to withstand the constant movement and wear and tear to which it is subjected, with a minimum charge for upkeep and repairs.

Undoubtedly, the best screening medium consists of a wire gauze of as large an unsupported area as possible, which should receive small and rapid vibrations in such a direction as will ensure the coal passing over the screen in the shortest possible time; and the ideal motion would be one in which the screen not only receives an oscillatory horizontal movement, but a vertical one as well. This is evidenced by the fact that an old screen in which the supports and driving rods are all loose, so that the screen joggles about, so to speak, separates the coal much better than one which works with a certain fixity of movement. The horizontal oscillatory motion is easily obtained, and if properly constructed, very little power is required, but the vertical vibrations are not so easily obtained, as the action of gravity has to be taken into account. Theoretically, a jigging screen suspended from hangers, once set in motion, would continue swinging in a horizontal direction were it not for the friction at the points of suspension. To move the screen vertically up and down, however, means that a certain amount of work has to be done in lifting a weight against gravity. For instance, suppose it were desired to give, say, 1,000 vibrations per minute, each $\frac{1}{4}$ in. in length, this would be equal to—supposing the screen and coal weighed, say, 4,800 lb.—

$$\frac{4{,}800 \times 0{\cdot}25 \times 1{,}000}{33{,}000 \times 12} = 3{\cdot}03 \text{ horse-power.}$$

which would be probably increased to twice this amount after allowing for friction. It might, however, be possible to in some way balance the weight—say, by means of springs in compression arranged in the hangers, so that the power required would be that merely due to friction, but in either case the better screening would probably justify the expenditure of the energy. It is important to notice that a simple oscillatory motion is not enough—for perfect separation it should be vertical in direction as well.

This latter point has been recognised, and bar screens have been designed in which the bars move in both a horizontal and vertical direction, and, while no doubt an improvement on the fixed bar screen, they still, however, retain some of the disadvantages of the latter. To remove these and increase the screening efficiency, the bars have been replaced by channel bars perforated with holes, such a screen (by the Humboldt Engineering Works Company) being shown in figs. 853,

854 and 855. Here the screen consists of a number of channel bars perforated with holes, suspended from hangers by means of cross-bars To the two outside bars the sheet iron sides, strengthened by a beading, are fixed as shown in fig. 855. Each alternate bar is fixed to one set of cross-bars and the intermediate bars to the other set of cross-bars, the two middle ones being attached to the driving eccentrics, which are set at 180 degs. with each other, so that while one set of bars are at the extreme forward swing, the alternate bars are at the extreme backward swing, the two sets of bars being thus made to balance each other.

FIG. 853.

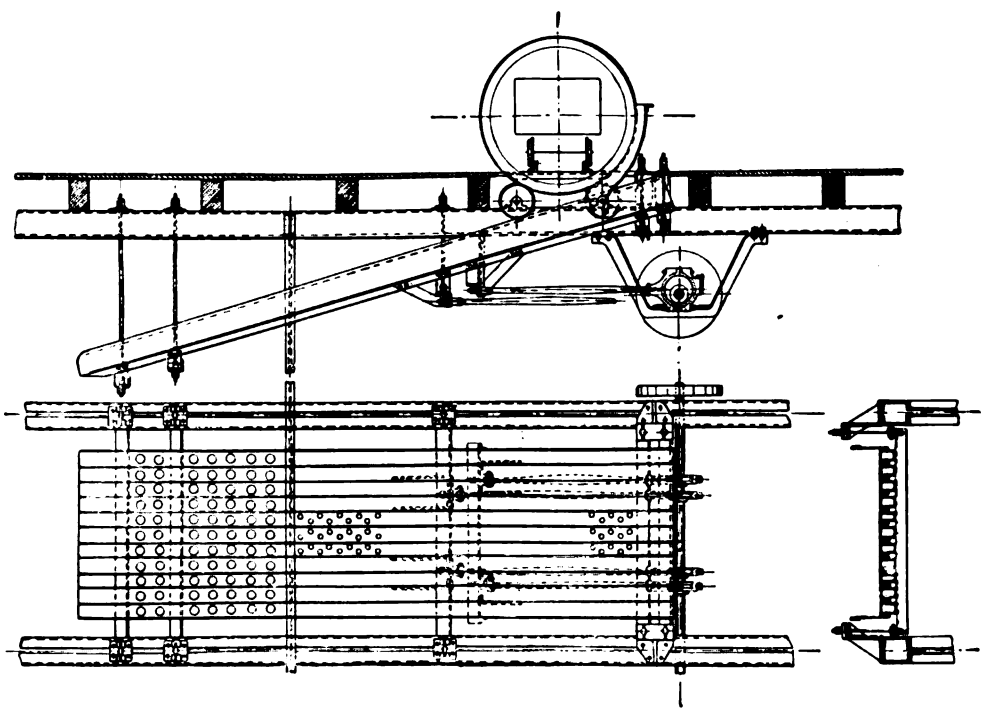

FIG. 854. FIG. 855.

FIGS. 853, 854 AND 855.—PERFORATED CHANNEL BAR SCREEN.

In other cases the bars, instead of sliding or swinging horizontally, as in the above screen, are fixed at the delivery end and receive a vertical movement, each bar rising and falling alternately.

A screen which has both a lateral and vertical movement, designed by Mr. Chambers and manufactured by Messrs. George Fletcher and Co., is in use at the Denaby Main Colliery and shown in figs. 856, 857 and 858. The screen bars

Fig. 856.

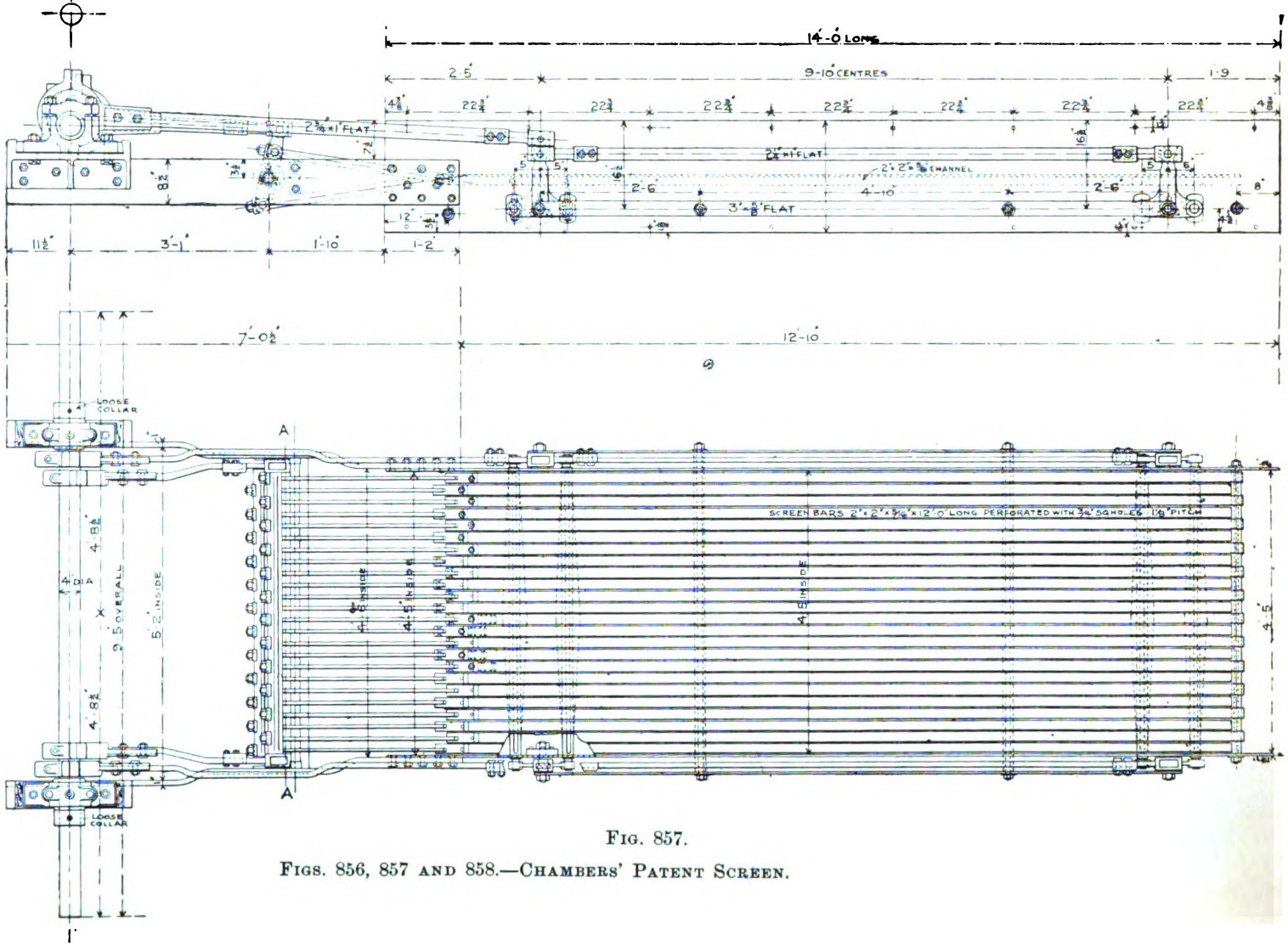

Fig. 857.

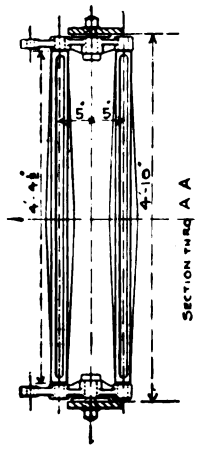

Fig. 858.

Figs. 856, 857 and 858.—Chambers' Patent Screen.

consist of perforated channel bars supported upon rocking pins by means of inverted steps fixed to the underside of the bars. These pins are rocked by means of the rocking levers driven by the eccentrics and rods from the main driving shaft. The ends of the bars are attached to rods which are secured to another rocking lever also driven by means of eccentrics as shown, which imparts a lateral or sliding movement to the bars, each bar moving in a different direction to the one next to it. Thus half the number of bars rise, move forward, carrying the coal with them, then are lowered and move backward, whilst the alternate bars are moving in the reverse direction. Consequently, while one set of bars commence to fall and move back, the other set are rising to lift the coal and carry it forward. There is no need for any inclination of the screen, but they are usually set with a small inclination of 1 in 12. This is probably the nearest approach to a perfect screen of the bar type that has yet been devised, as it reduces the height of the heapstead, is self-contained, the moving parts are balanced, thus reducing vibration on the building, and the coal is carried instead of sliding forward.

Another type of screen made by the Humboldt Company is shown in figs. 859 and 860. In this case, instead of moving bars, the screen is provided with transverse rollers, which are let into, so to speak, the flat iron longitudinal bars, thus dividing the screen into a number of square spaces, through which the small coal falls. The rollers are all driven in one direction towards the delivery end of the screen by means of a gear chain and sprocket, or pinion wheels fixed to the end of each roller; while the longitudinal bars are fixed at each end to a frame which rests upon a transverse angle bar at the delivery end, and upon rollers at the other end. These rollers rest upon eccentrically-fixed cams upon the main driving shaft, so that as they revolve they constantly raise and lower the longitudinal bars, which action to some extent prevents pieces of coal being wedged, and consequently broken up between the rollers. When lowered, the top of that portion of the bar between the rollers is slightly lower than the top of the latter, which thus carry the coal towards the delivery end of the screen.

Another screen on similar lines is the Distil-Susky, shown in fig. 861. Here, however, instead of the longitudinal bars, the rollers have cast on them angular-shaped flanges with diamond-shaped perforations, and are driven through mitre gearing.

In both these screens, however, it is easily seen that any pieces of coal which may become wedged—and especially in the latter—must be broken up, and, moreover, they are expensive to construct.

Other screens have been constructed with a gyratory movement, such as Karlick's and Coxe's, both of which are expensive to construct, and offer no advantages over the ordinary jigging screen. A better screen than either on this principle

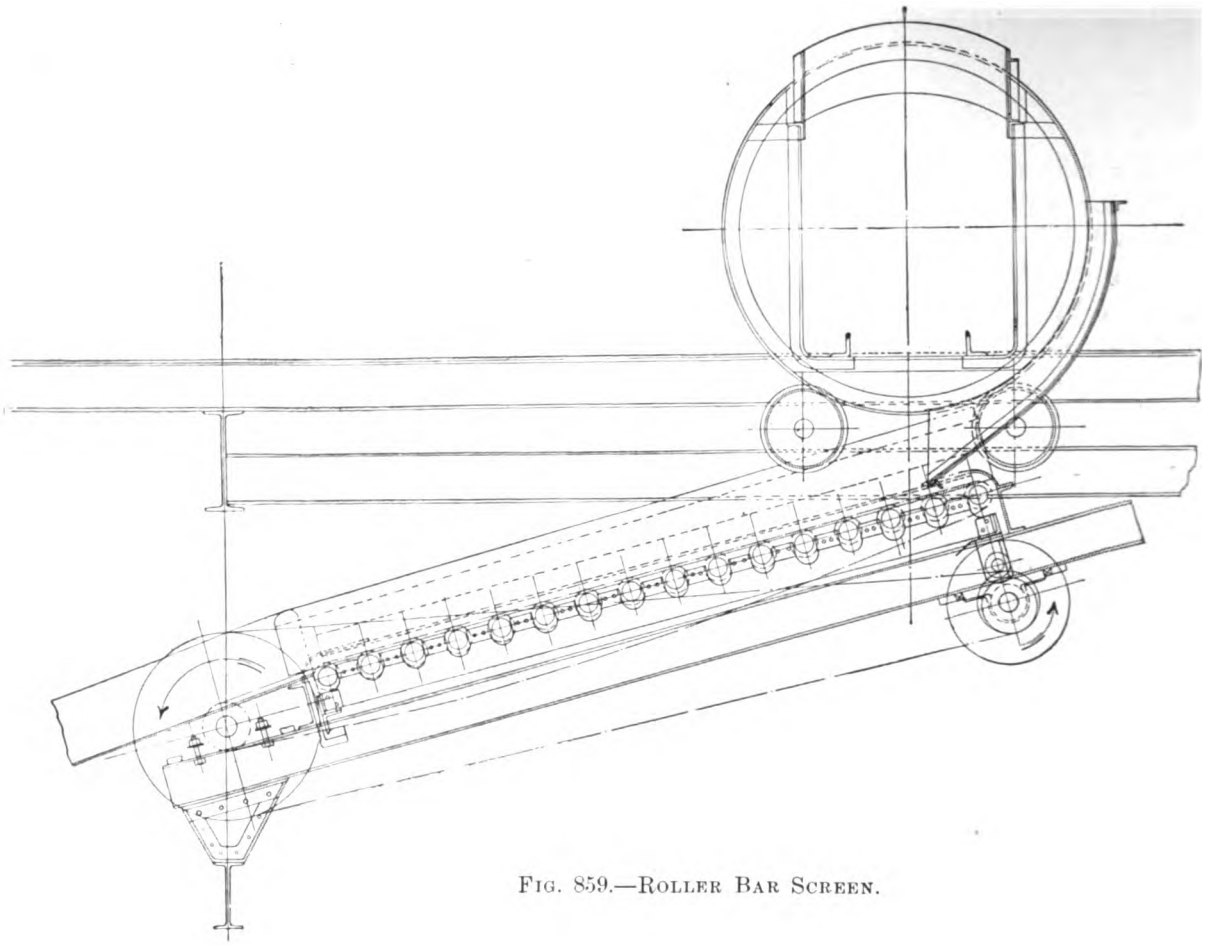

FIG. 859.—ROLLER BAR SCREEN.

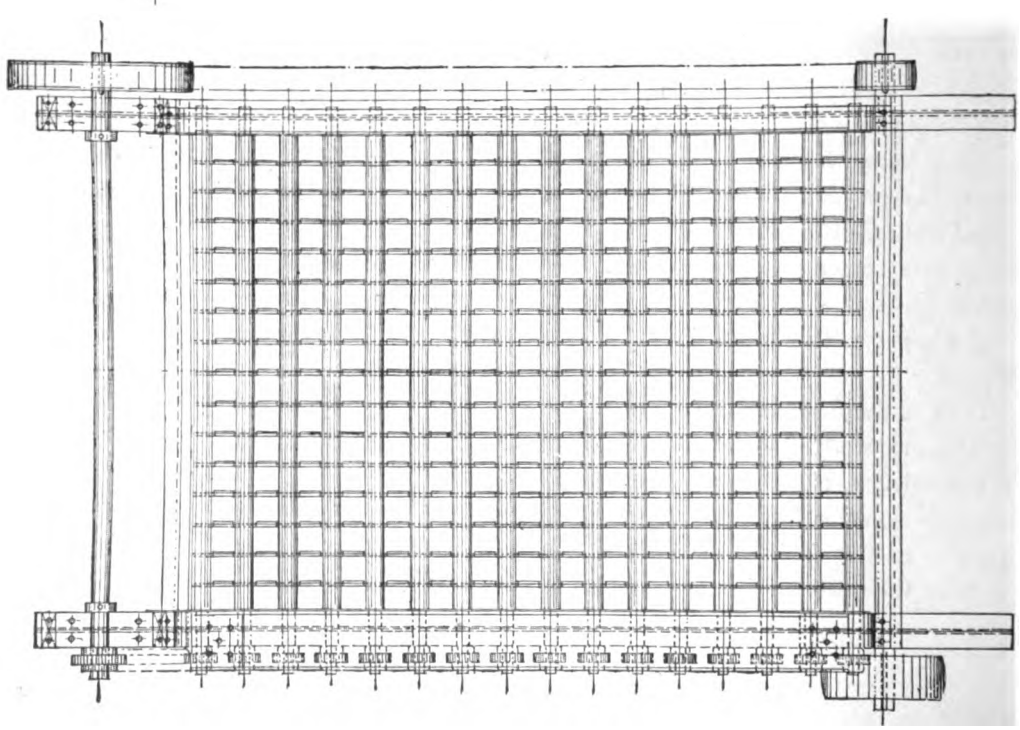

FIG. 860.—ROLLER BAR SCREEN.

is Beaumont's "Vibromotor," shown in figs. 862 and 863, and made by Messrs. the Hardy Patent Pick Company. This consists of an inclined perforated steel plate fixed in a suitable frame suspended by four wire ropes, from a wood or iron overhead frame, so that it will swing easily in any direction. In the centre of the screen, and above the plate, is a box in which revolves an unbalanced weight fixed to an arm upon a spindle working in bearings as shown. The top of the spindle is jointed to a rod, which in turn is jointed at its upper end to the spindle carrying a horizontal pulley, fixed in the upper part of the frame supporting the screen, and driven by a belt by means of jockey or guide pulleys. By this means the spindle carrying the weight may be rapidly revolved, and it is evident that if the weight was balanced it would simply turn about the vertical centre line of the two spindles which would be the centre of gravity of the mass, but not being balanced the centre

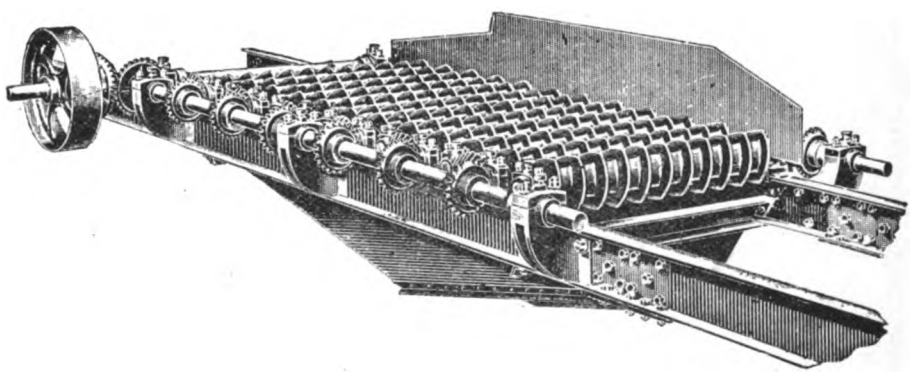

FIG. 861.—DISTIL-SUSKY SCREEN.

of gravity lies between the weight and the centre of the spindle, and it is about this centre that the spindle tends to rotate, but it can only do so by carrying the whole of the screen with it. In other words, there is a constant centrifugal force pulling the screen round a circular path in a horizontal plane, which pull is balanced by the weight of the screen.

The power required, therefore, is merely that due to friction, and the amount of gyratory movement or "stroke" depends upon the position of the weight upon the arm. This screen may be run at a high speed; for instance, the shaft of a 12 ft. by 4 ft. "Vibromotor" would revolve at 325 revolutions per minute, the stroke or movement of the screen being about 2½ in.

They are, however, only suitable for dealing with coal requiring a secondary separation, or in cases where the coal can be continuously and evenly supplied, and are not suitable as main large coal screens, as it is easily seen that suddenly to

Fig. 862.

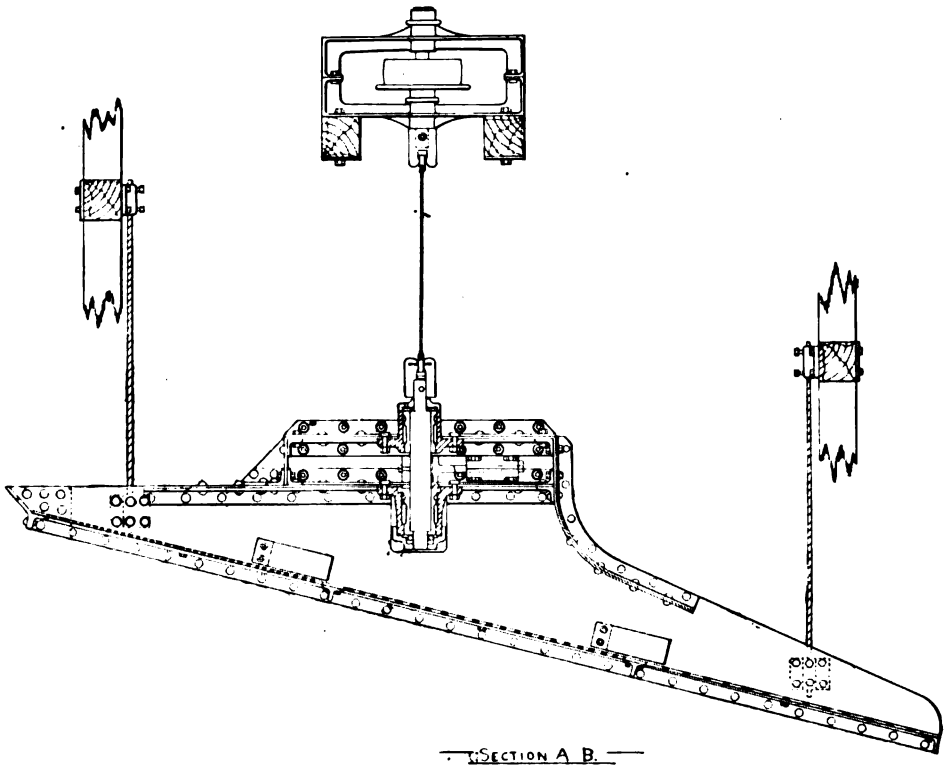

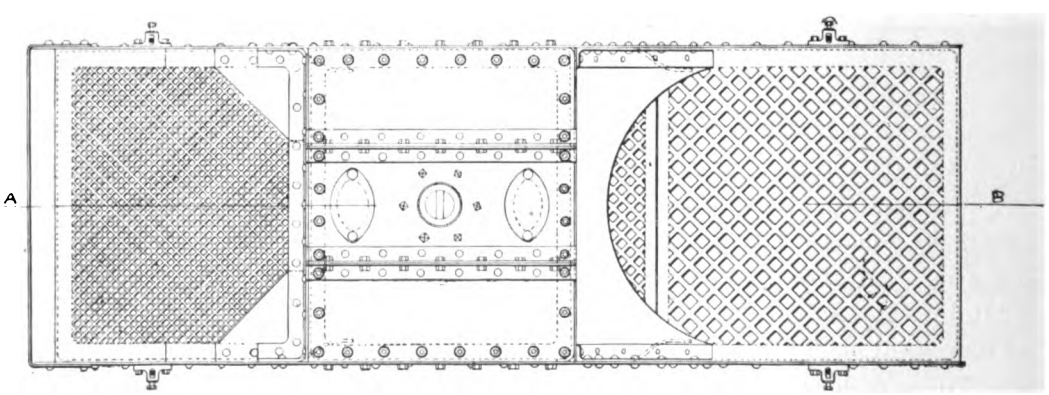

Fig. 863.

Figs. 862 and 863.—"Vibromotor" Screen.

dump, say, half-a-ton to a ton of coal directly from a tub on to such a screen, would materially interfere with the amount of vibration, seeing this is affected by the weight of the screen and coal. A screen, however, having holes, say, $\frac{5}{8}$ in. or $\frac{3}{4}$ in. diameter in the screen plates, can satisfactorily separate about 12 tons of coal per hour.

Another type of screen by the Humboldt Company is shown in figs. 864 and 865, this being supported at one end upon eccentrics mounted upon a revolving shaft, and suspended at the other end by rods. This screen, therefore, has an up-and-down as well as a longitudinal motion and gives very good results. The objection to it is that the whole mass of the screen has to be kept in motion, and as will be seen, though the eccentric bearings have broad wearing surfaces, if run at a quick speed the wear and tear is great, as is the case with any unbalanced jigging screen, and in designing screens of this type it should be arranged to vibrate the trays only, the side frame of the screen being stationary.

Another type of screen by the Humboldt Company is shown in figs. 866, 867, and 868, (Plate LXXV.) which is vibrated sideways. Two screens, one above the other, are supported at the corners by means of rods fitted with ball-and-socket joints. The two screens are driven by a vertical crank shaft through bevil gearing with cranks at 180 degs. so as to secure a balance. The motion of the screens at the driven side is gyratory, but at the opposite side less so; and though the screens are balanced in relation to the structure, unlike the "Vibromotor," the inertia of the screens themselves is not balanced, and in consequence the screening action is severe, and unsuitable for soft coal. By increasing the inclination and reducing the stroke, however, the grinding action may be considerably modified.

A pair of side-driven jigging screens by the Humboldt Company are shown in figs. 869, 870, and 871 (Plate LXXVI.), and a pair for dealing with five sizes of coal in figs. 872 and 873, whilst figs. 874 and 875 (Plate LXXVII.) show a similar single screen in which the balancing is effected by counter-weights. All these screens are suspended by rods from overhead beams, and driven either by eccentrics or, as in the case of figs. 874 and 875, a crank shaft; and are mainly used for classifying "nut" coal.

The principal feature of Durnford and Wormald's patent screen, which is illustrated in figs. 876, 877, 878, and 879 (Plate LXXVIII), consists in suspending the screen by means of four short connecting rods in which it swings, being driven by a crank shaft at the back. The connecting rods or suspenders are set at such an angle that as the screen is pushed forward it is lifted as well, the coal receiving a succession of upward jerks. As shown, however, the arrangement is bad, inasmuch as the driving connecting rod is in about the worst position for transmitting the power, the result being

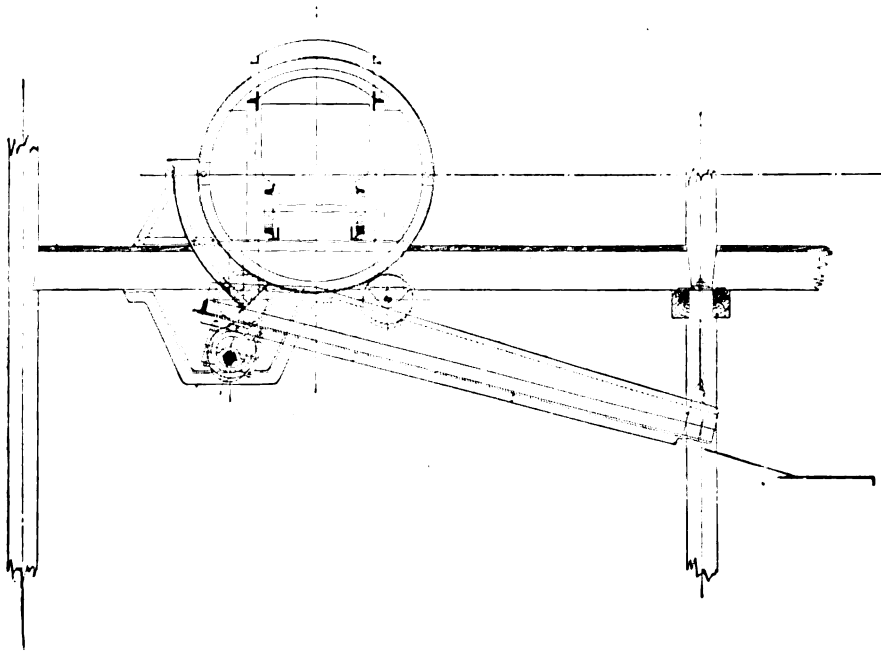

FIG. 864.

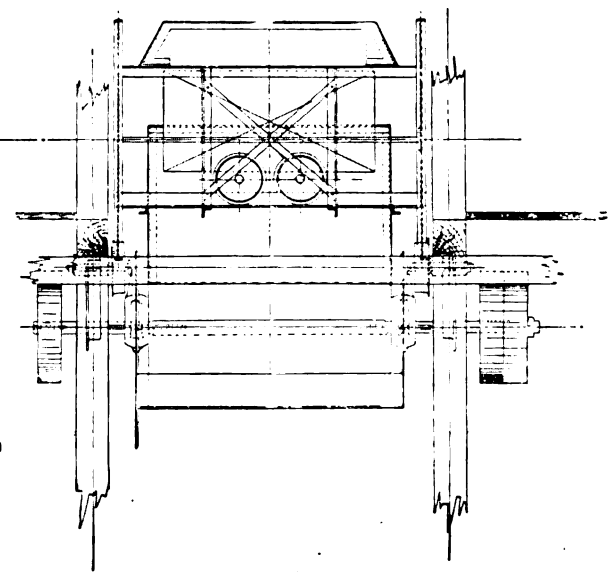

FIG. 865.

FIGS. 864 AND 865.—SHAKING SCREEN.

PLATE LXXV.—(*To face page 392*).

FIG. 867.

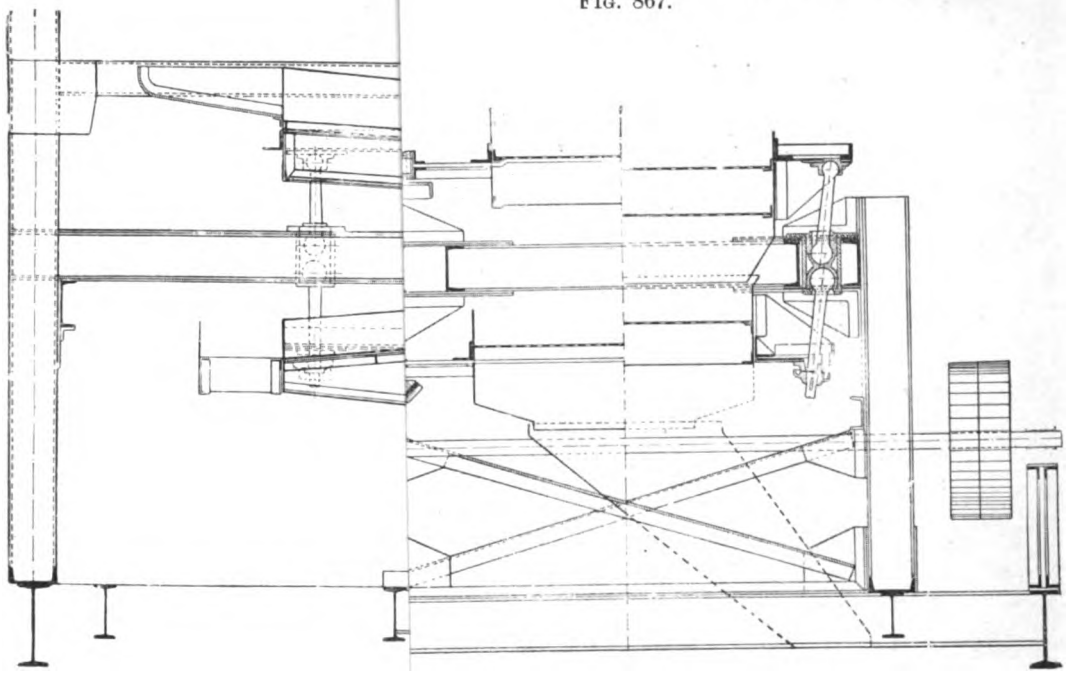

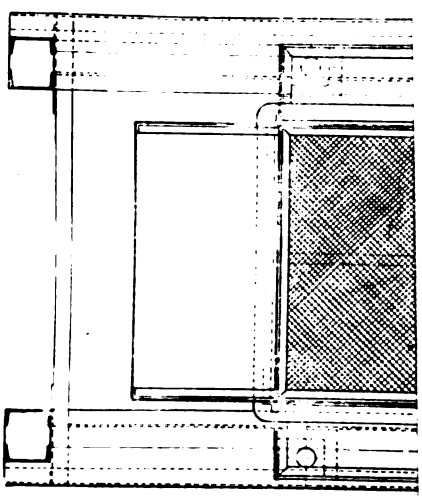

CN.

P

FIG. 871.

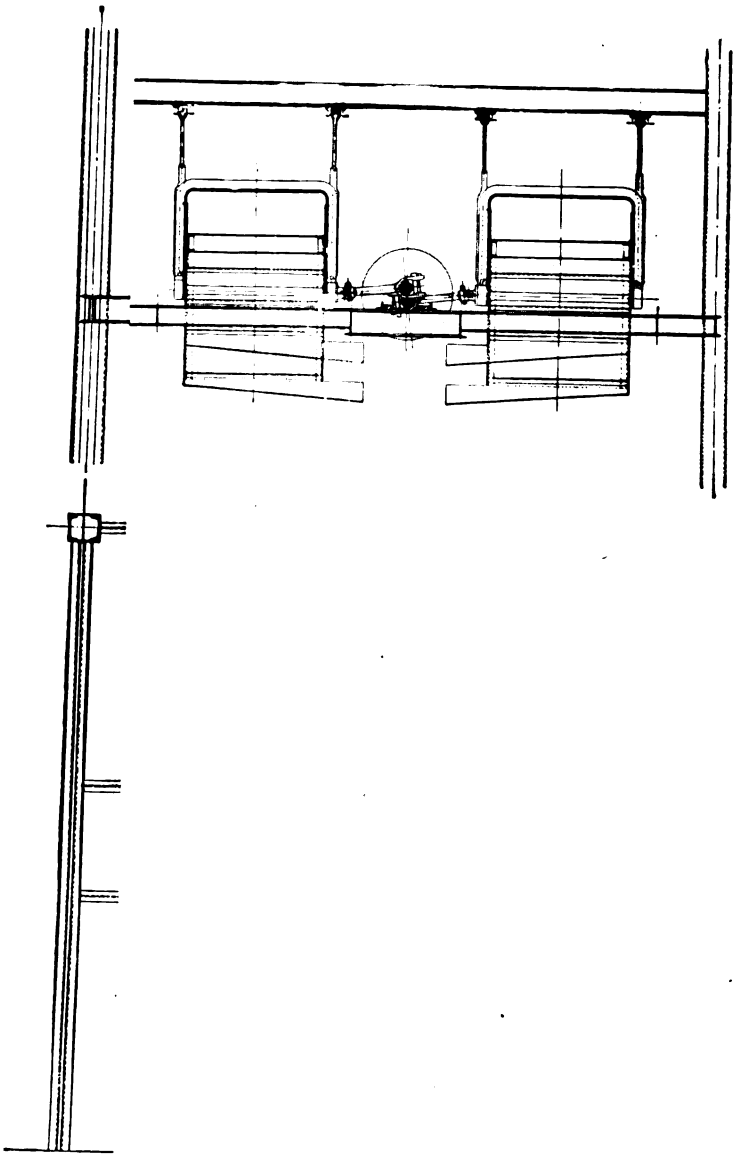

IGGING SCREENS.

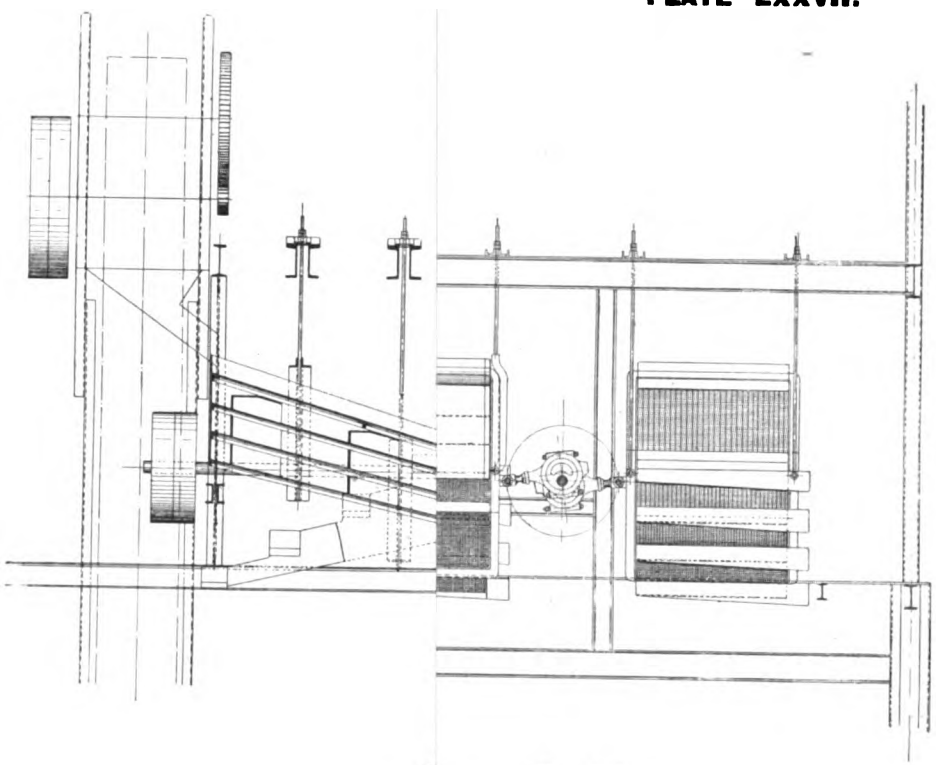

FIG. 873.

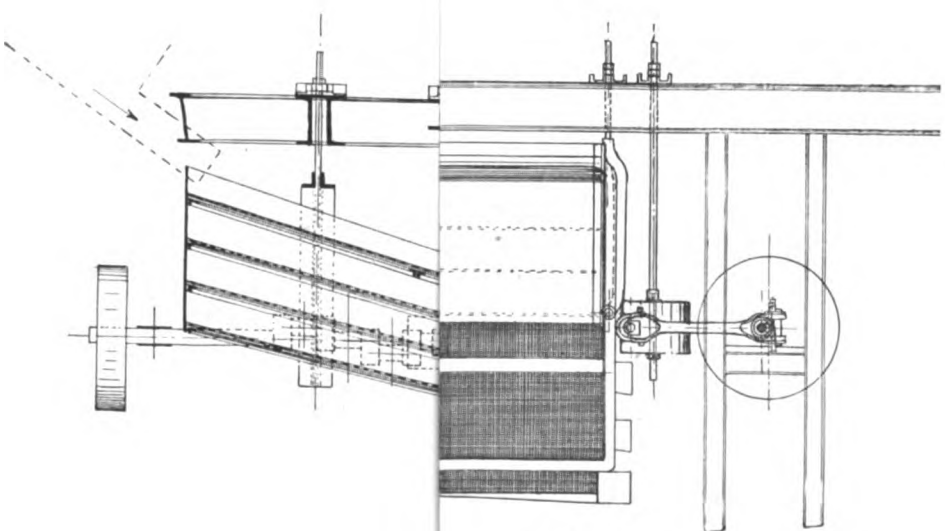

FIG. 875.

PLATE I.

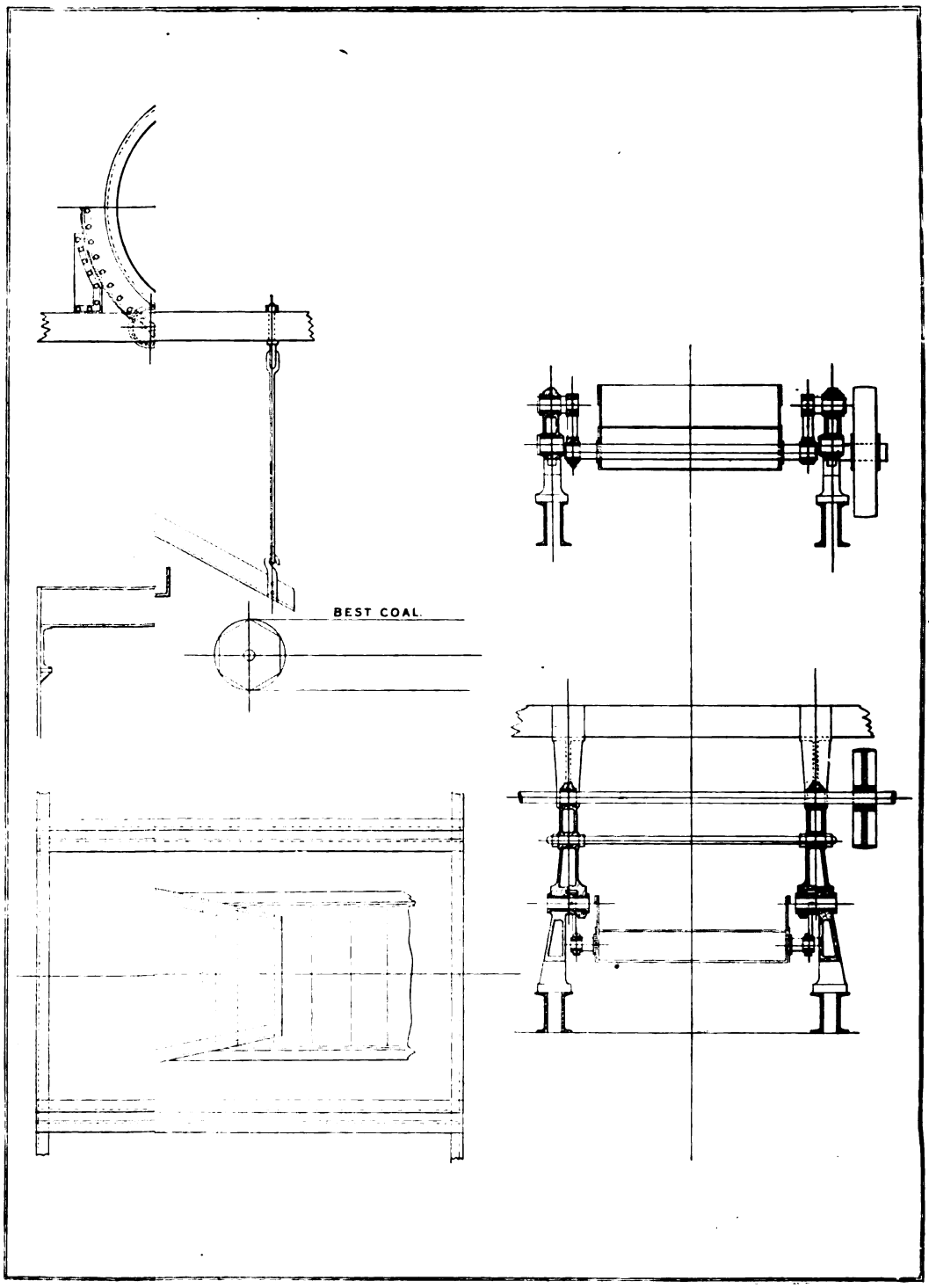

WORMALD'S PATENT SCREEN

that considerable energy is wasted in friction, and the wear and tear must be severe. This screen could be very considerably improved by placing the crank shaft lower and arranging the driving connecting rods at right angles to the swinging or suspending rods, and balancing the weight of the screen either by some arrangement of springs or balance weights over pulleys—the former being preferable, as they would to some extent take up the inertia of the screen—and by suitably proportioning the length of the swinging rods to the speed and stroke so that it might be quickly vibrated, it would approach a practically perfect screen.

The ordinary jigging screen has already been described, and although many attempts have been made to supersede it, it still remains, at least in this country, owing to its simplicity, and its more or less effective screening efficiency, the most popular type of separating apparatus. The chief objections are that it only screens the coal on the return movement—that is to say, on moving forward it carries the coal with it, but owing to the inclination and the tendency of the coal to slide downwards, on the backward motion of the screen the inclination is, so to speak, increased, and the coal slides down until again checked by the forward motion, and consequently to obtain the best effect the inclination, length of stroke, and number of vibrations should be carefully proportioned each in relation to the other ; further, its weight is unbalanced, and the vibration is transferred to the supporting structure and building, resulting in very great wear and tear.

Ordinarily the screen is suspended by means of rods and swings backwards and forwards to all intents and purposes exactly similar to a pendulum, and theoretically once set in motion, were it not for friction, would continue to vibrate at a certain rate depending upon the length of the suspending rods. To attempt to alter this rate would result in a series of knocks, the intensity of which would depend upon the quicker or slower rate of movement. The period of time required for a vibration of any pendulum may be determined from the formula

$$T = \frac{\sqrt{L}}{6{\cdot}2561},$$

in which

T = the time of one vibration in seconds,

L = the length of the pendulum in inches,

and $L = T^2 \times 39{\cdot}1323.$

Consequently the length of a suspension rod for a screen to vibrate, say, 120 vibrations or strokes per minute, or one stroke every half second should be

$$L = 0{\cdot}5^2 \times 39{\cdot}1393 = 9{\cdot}78 \text{ inches.}$$

instead of which the rod would be made of any convenient length to suit conditions, and the rods may not even be all the same length, with the result that excessive

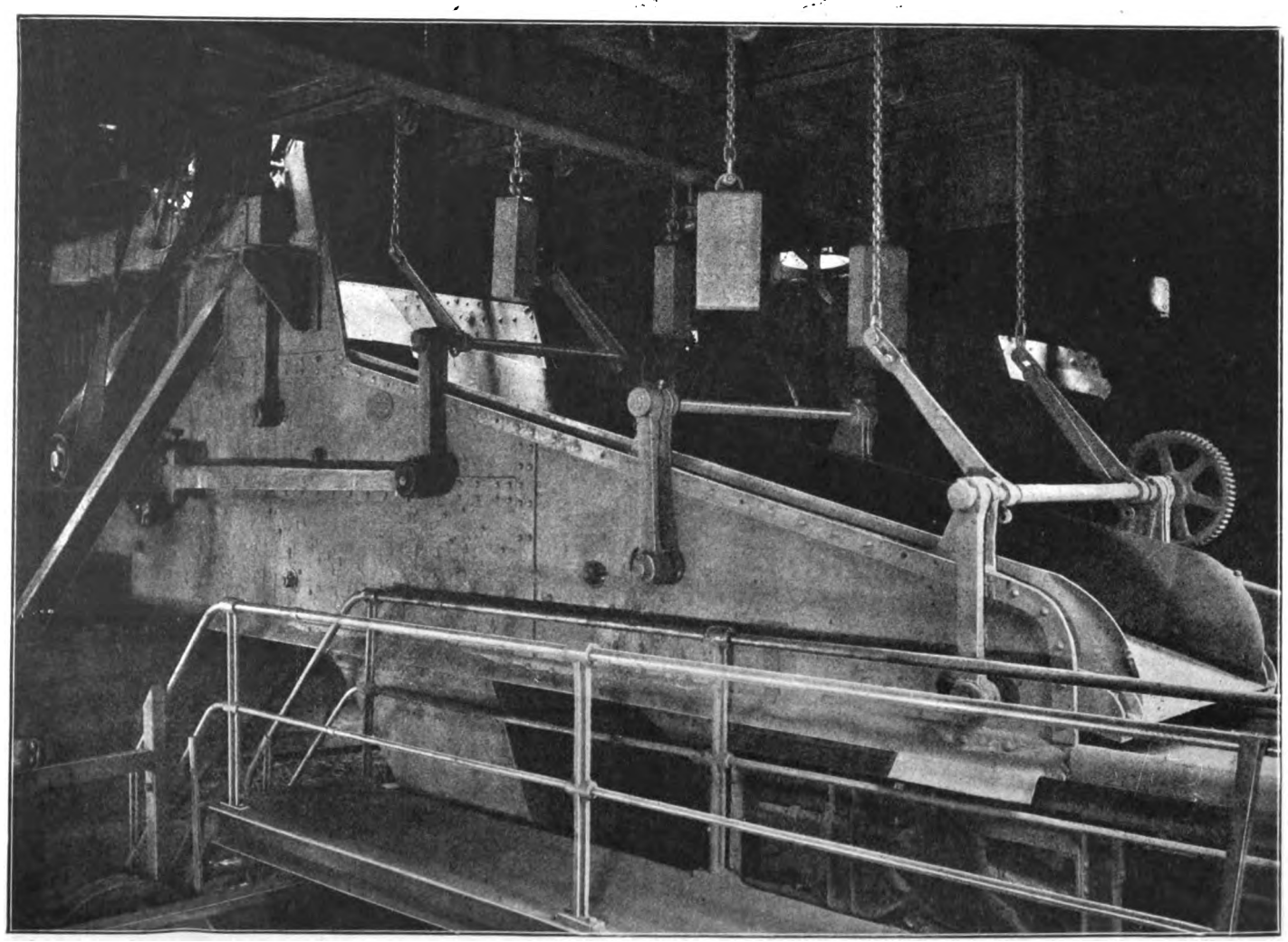

FIG. 880.—COOK'S SELF-CONTAINED JIGGING SCREEN.

knocking takes place, with consequent noise and great wear and tear, due to the momentum stored in the moving screen having to be suddenly destroyed at the end of each stroke. This effect, however, of a long suspension rod may be obviated to a great extent by suitably interposing springs to balance the inertia of the screen, and generally the question is one worth experimental investigation.

So serious is this unnecessary vibration, that in many cases means have to be provided in the shape of masonry pillars or back stays, to take the shocks, and so prevent damage to the building; even then frequent stops occur through the breaking of driving rods, heating and breaking of eccentric straps, &c., all of which could be avoided by designing the plant on proper lines, so that a minimum of attention and supervision is required. Messrs. Joseph Cook, Sons, and Co. build the jigging screen so as to be entirely self-contained, one such being shown in fig. 880, so that no shock is transmitted to the structural parts of the heapstead. In this case the bearings of the driving shaft are fixed to the side plates of the screen, which are extended backwards for this purpose. This screen is also provided with an arrangement for raising and lowering a smooth plate over the perforated plate or gauge by means of levers worked by a worm and worm-wheel, the latter being clearly shown, for the purpose of making unscreened coal. The counter weights, suspended by chains over pulleys, balance the weight of this plate, which is, however, not shown in the photograph, but would be attached to the levers inside those to which the chains are fixed.

Where it is desirable or necessary to separate several classes of coal in one screen, the trays are often fixed and the whole screen is jigged bodily. This is probably one of the worst forms of construction, and although it may be a little cheaper in its first cost, it is expensive in power and upkeep. A much better arrangement is to divide the screen into sections, moving the trays only, which are separately suspended and provided with eccentrics and rods for this purpose.

Such an arrangement, by Messrs. Campbell, Binnie and Co., is shown in figs. 881, 882, and 883. Here four screens are separately suspended by means of ash-wood rods, which are secured by clamps to the screen frame and overhead girders. There are no joints to wear or work loose, and further, the elasticity of these rods tends to take up the inertia of the screen. Each pair of screens work oppositely to each other, so that the whole set are balanced and the shock to the building thereby reduced to a minimum.

As previously mentioned, in order to make unscreened coals, where ordinary "bar" type or perforated plate screens are in use, it is usual to fit over the bars or plates a smooth thin plate, which has to be removed as soon as the quantity of unscreened coals required has been made, the process being both slow and trouble-

Fig. 881.

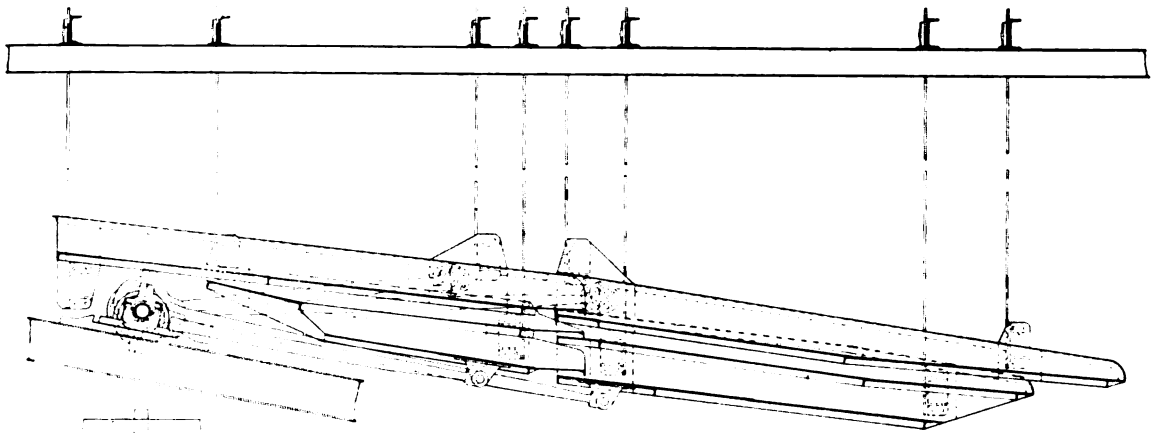

Fig. 883.

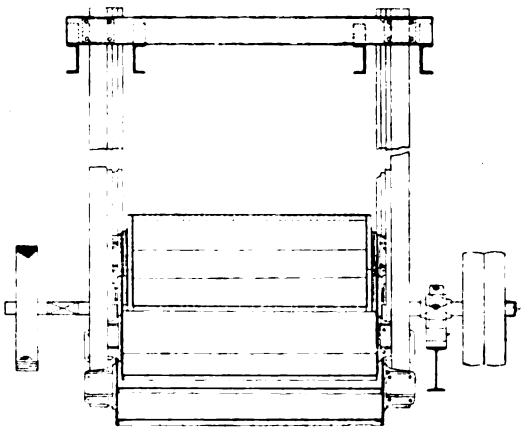

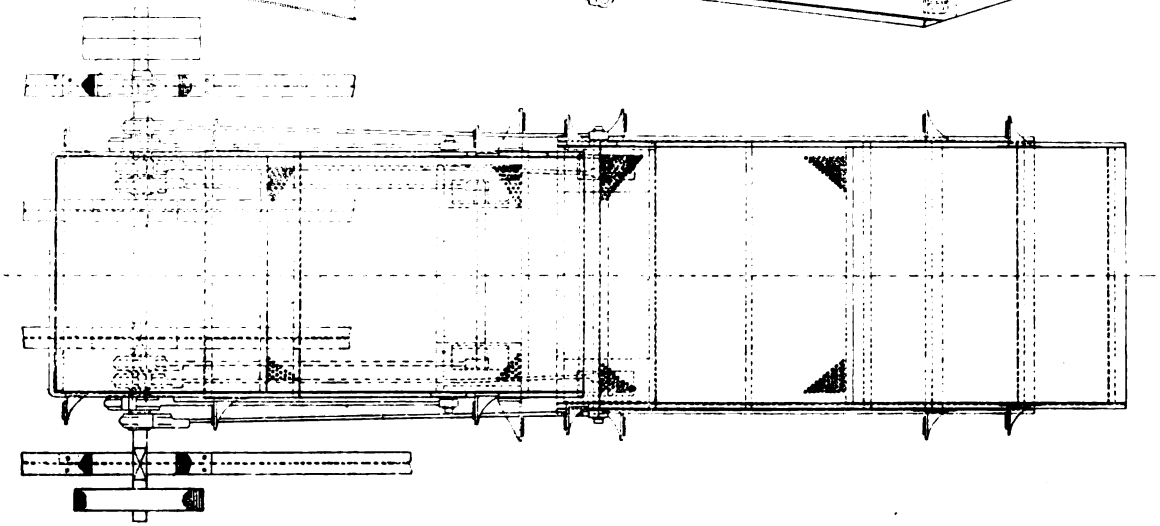

Fig. 882.

Figs. 881, 882 and 883.—Messrs. Campbell, Binnie and Co.'s Multiple Screen.

some, and in order to improve matters, the arrangement shown in figs. 884 and 885 has been introduced.

As will be seen, a plate suspended by four hangers from arms keyed to two of the weighbars carrying the screen hangers—the screen in this case being a jigging

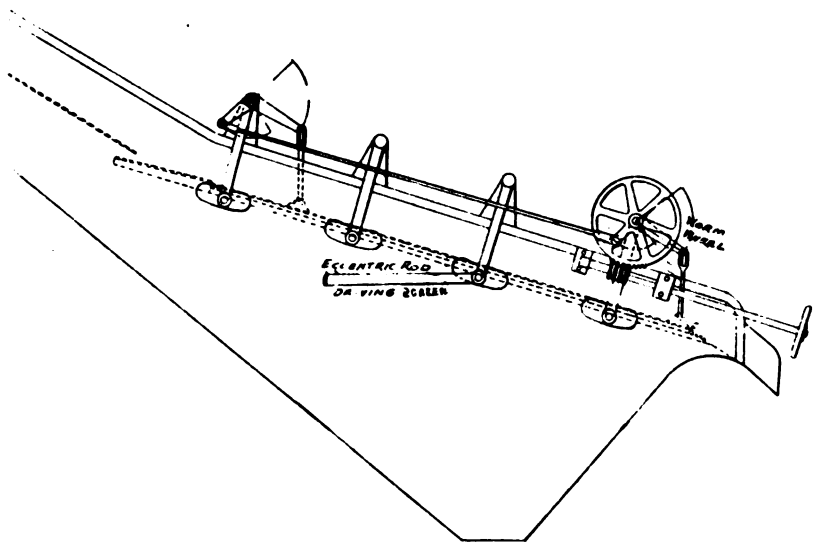

FIG. 884.

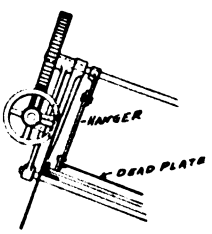

FIG. 885.

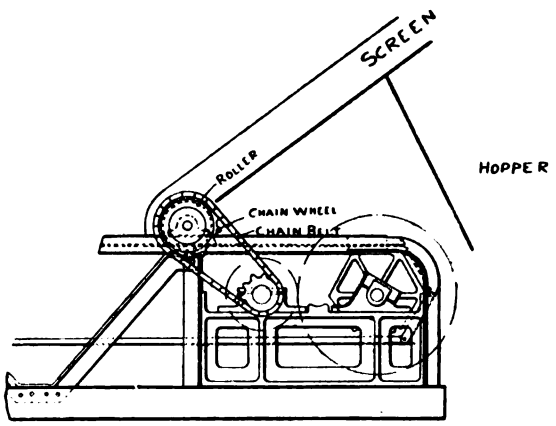

FIG. 886.

one—is raised or lowered as required by means of a handwheel, through the worm gearing and levers. It is much better, however, so to arrange the whole screen that "unscreened" coals may be made without having to "plate."

Fig. 886 shows an arrangement for driving a distributing roller at the end of a

screen, to prevent the coals as they slide down the screen falling upon the belt in heap. The roller—which should be fluted—is driven by means of a light chain belt from the pinion shaft of the main gearing driving the belt. Its use ensures the coals being thinly spread over the belt so that the stones and dirt are more easily seen and picked out.

Other types of screens are the "Kreiss" or "Zimmer" and the "Marcus,"

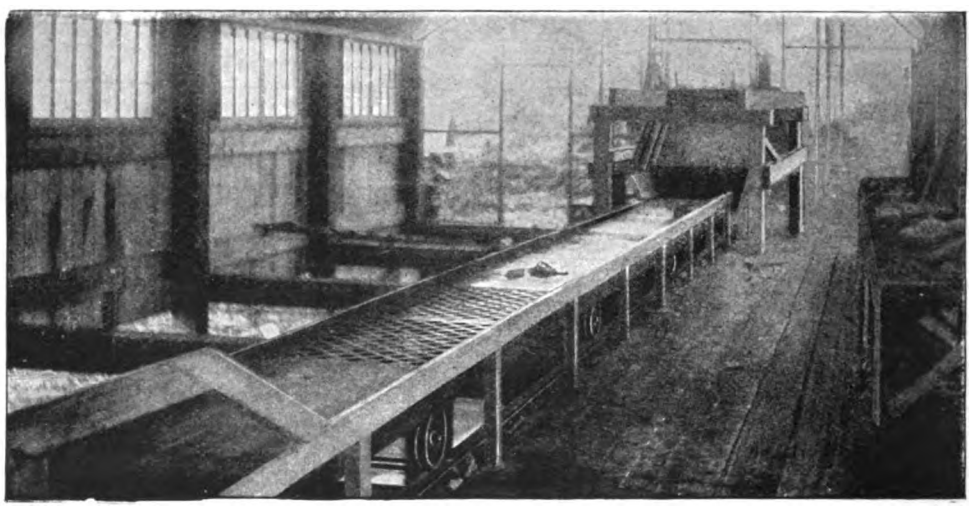

FIG. 888.—THE "MARCUS" CONVEYOR.

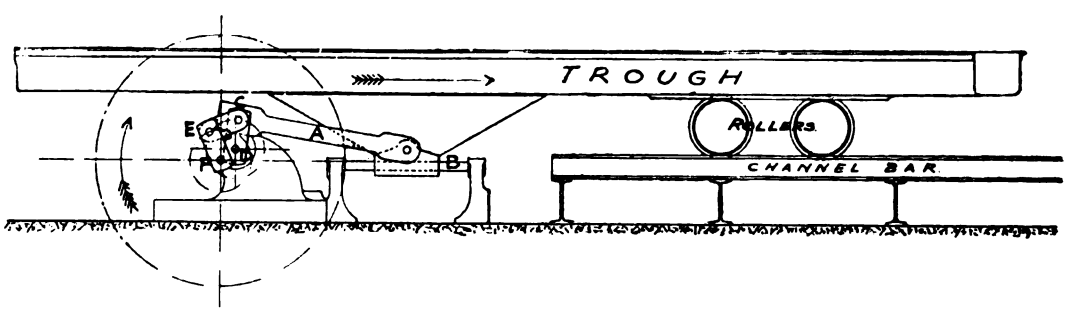

FIG. 889.—"MARCUS" CONVEYOR. DRIVING ARRANGEMENT.

which are better known as conveyors. They may, however, be also used for the screening and sizing of coal. Fig. 887 (*see* page 400) shows the arrangement of the "Zimmer" conveyor, by the Zimmer Conveyor Company, when used for this purpose, which, as will be seen, consists simply of a perforated plate in a trough, through which the small coal falls to the bottom of the trough,

whence it is discharged through openings in the latter. Shoots, of course, have to be arranged to receive the small coal and discharge it to one side of the conveyor. Fig. 888 shows the "Marcus" conveyor by Messrs. Head, Wrightson and Co. Limited similarly arranged.

Both these screens have the advantage that they are low in height, require no inclination, and in fact merely form a continuation of the picking belt. The trough of the Zimmer screen is mounted upon inclined legs made of sound, straight-grained ash, fixed at the base and flexible enough to allow the trough—by means of the connecting rods and driving crank—to be vibrated rapidly backwards and forwards. On being moved forwards, the coal or other material is jerked slightly upwards, leaving the floor of the trough and moving forward in the air with the momentum given to it, during which time the trough has made its backward stroke, and the material on falling takes a new position in front of the one it rested on previously. The motion is really a "hopping" one, and consequently there is a limit to the dimensions of the pieces of material being treated; therefore is not suitable for large coal, and in fact is only used for the sorting and conveying of various classes of nut coal. In fig. 887 the screen is divided into two sections, which move in opposite directions for balancing, whilst the inertia of the screen is taken up by the volute springs at the connection of the driving rod to the trough.

The "Marcus" conveyor is on an entirely different principle, the trough being mounted or supported upon rollers, and receiving a "slow" forward and "quick" return motion from a connecting rod driven by a belt pulley through a special arrangement of cranks and connecting links, as shown in fig. 889. Here A is the connecting rod working on a guide bar B at one end, and coupled to a crank C D at the other. The outer end of this crank at C is coupled to the outer end of the crank E F at E by a drag link, the crank being keyed to the driving shaft at F. This shaft is driven at a constant angular velocity, and the result of the relative positions of the driving to the driven shaft is such that at the commencement of the stroke the trough moves forward with a constantly increasing speed, the maximum being reached when nearly at the end; it then quickly decreases to the end of the stroke, when reversal takes place, and the backward stroke is made with a quickly increasing speed at the commencement and a constantly decreasing speed for the greater portion. The motion may be simply illustrated by taking a piece of cardboard in one's hand, and laying on it a coin or other light article. By moving the hand outwards the coin is carried by the cardboard, but on quickly jerking the hand back the cardboard slides, so to speak, under the coin, and on coming to rest the coin is found to be in a position in front of the one occupied previously, and by a few oscillations of the hand in this manner the coin will soon reach the edge of the cardboard, and finally fall off. This screen will deal with large coal,

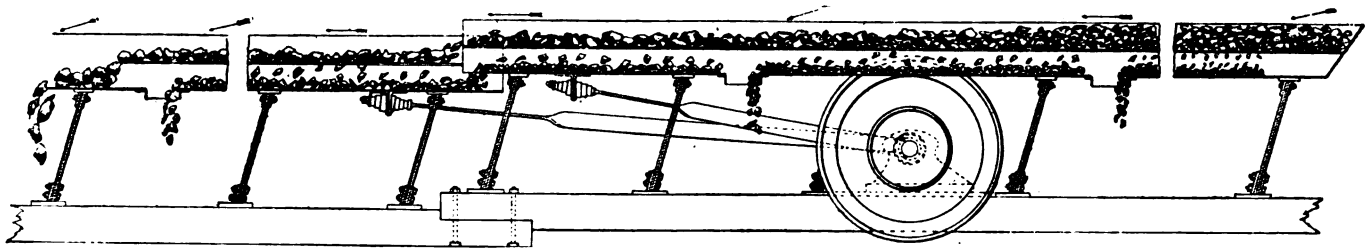

FIG. 887.—"ZIMMER" SCREEN.

FIG. 890.—PLAN.

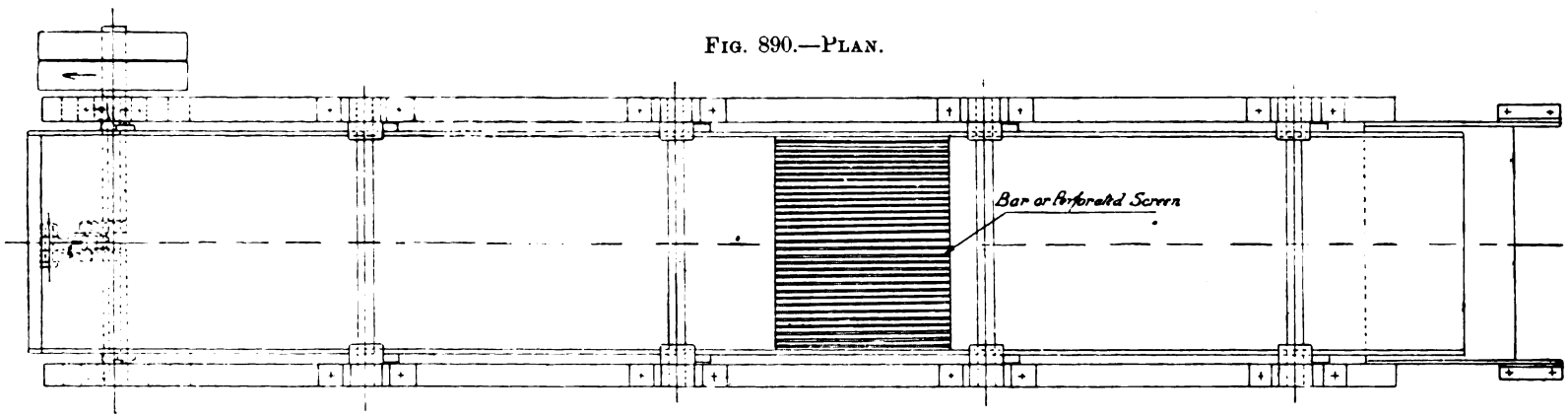

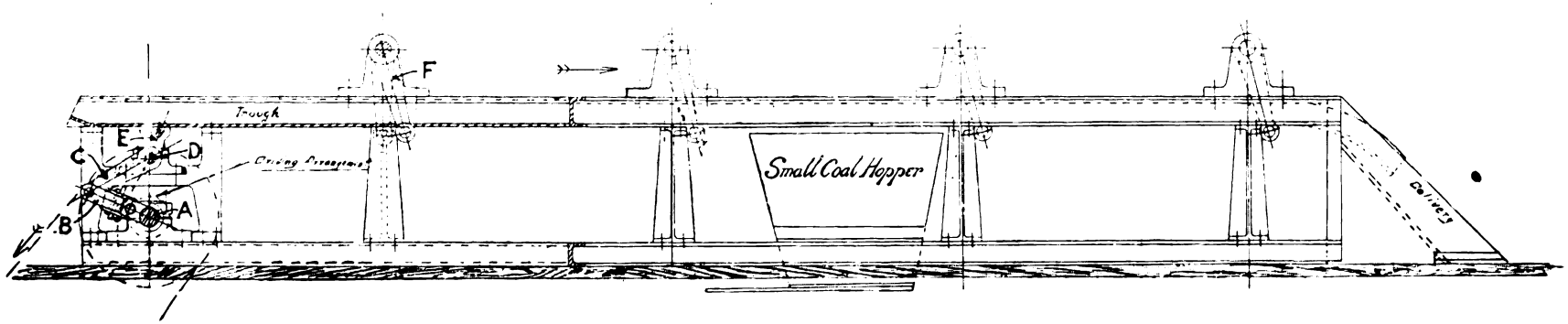

FIG. 891.—SECTIONAL ELEVATION.

FIGS. 890 AND 891.—MARR'S "EXCELSIOR" SCREENING CONVEYOR.

but it is very questionable whether it will size the coal efficiently, and, further, as the coal never leaves the trough bottom there must be considerable attrition—much more than on an inclined jigging screen, as the inclination lessens the friction between the bottom of the screen and the sliding piece of coal.

Another screen of this class has recently been invented by Mr. J. H. Marr, and is now being manufactured by Messrs. Joseph Cook, Sons and Co. Limited, which has many advantages over its competitors in the shape of simplicity, efficiency, and the small amount of power required for its operation. This is shown in figs. 890 and 891, in plan and sectional elevation respectively, and is intended to screen and deliver the coals into wagons at one operation.

The principle of its action is somewhat different from either the Marcus or Zimmer, as previously described, which is that of a "quick forward" motion and a "slow backward" one, which is the reverse, for instance, of the Marcus, whilst the Zimmer depends for its action, not upon any difference in speed of the stroke, but upon the position or angle at which the swinging legs are set. The driving arrangement of the "Excelsior" (as the new screen is termed) is exceedingly simple, and, as will be seen, consists of a crank shaft A, driven at a constant speed by belt or other means. Immediately above this crank shaft is the rocking shaft D, to which are keyed the rocking lever C, and the jigging levers E, the latter being connected to the screen through elongated holes or slots to a flat bar with pin ends secured to the under side of the bottom plate of the screen. The rocking lever C is coupled to the crank pin by the short connecting rod B. In fig. 891 the screen is shown at the extremity of its forward stroke or just commencing the back stroke, which, owing to the relative positions of the moving parts, will be slow, as the crank pin will move approximately two-thirds of a revolution, as is shown in the small diagram, fig. 892, before the "forward" stroke begins, and, as the two strokes must occupy the same time as a complete revolution of the crank, it follows that the forward stroke must be made in one-third of a revolution, with quick acceleration and retardation. The screen consists of a trough made up from sheet steel and angle bars, and may be suspended on spring legs or from hangers F, as shown in fig. 891, which are so arranged that the screen is slightly raised at the end of the forward stroke, similar to the Kreiss screen—in fact, the "Excelsior" may be said to be a combination of the Marcus and Kreiss conveyors. The result is that with the quick short stroke the coal is thrown forward and upward, with sufficient impetus to keep it moving during the time occupied in making the return stroke. This is without doubt a near approach to the ideal screen, as the stroke is short, the coal is not violently disturbed or shaken, and the only objection that can be made against the screen, as shown in figs. 890 and 891, is that no provision is made for taking up the inertia of the moving parts. Mr. Marr has provided for this in his

patent specification, by adding balance weights to the hangers or supports, and flywheels to the crank shafts, which is obviously the wrong thing to do, as such additions merely increase the masses in motion, and would tend to increase rather than decrease unsteady working. The flywheel would no doubt tend to balance the turning effort on the crank shaft, but the only way to balance the inertia of the moving masses is either to proportion the length of the hangers to suit the speed, or, what is better, to balance the inertia by means of properly-designed springs. Further, the tendency should be to increase the speed and reduce the stroke, and a screen designed on these lines, and having a slight inclination of the screen towards the delivery end, would be practically perfect.

After what has already been said in regard to the design of screens, especially of the "jigging" type, it is interesting to note that the author's views are practically embraced by M. Jacquelin, who, in a paper read before the members of the

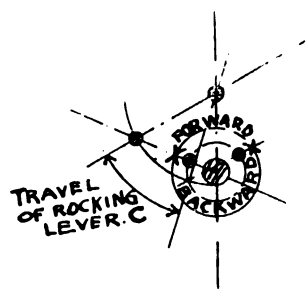

FIG. 892.

Société de l'Industrie Minérale (District du Nord), on November 25, 1906, describes an improved type of Kreiss sorting screen, shown in fig. 893, which is taken from the paper in question. As will be seen, it is supported upon eight legs articulated at each end, so that the screen swings upon them, these being set at such an angle that as the screen moves forward it rises in the same manner as the Zimmer screen. Owing, however, to the frequent trouble, caused by the failure of the steel legs when running at a high speed (250 vibrations per minute), it was decided to remove some of the supports and replace them by spiral springs as shown in fig. 894. The screen is set at an inclination of 3 degs., so that the coal passes over it with a minimum of friction, and is divided into six sections, fitted with perforated plates to classify the coal into sizes of 80, 10, 18, 35, 45, and 60 millimetres respectively, the large size being taken off the screen at the end of the first section. The double spring on the right is for the purpose of balancing the weight of the screen, while the single spring on the left, which corresponds to one of the double springs, balances the inertia of the moving screen. The results

obtained by the alteration—as one might imagine—have been in every way satisfactory, and the advantages are summed up by M. Jacquelin as follows :—

1. Twice the quantity of coals passed over the screen, without interfering with the classification.

2. Avoidance of breakdowns, either of the motor or other parts of the driving mechanism. (The screen is driven by a compressed air motor.)

3. Great economy of compressed air.

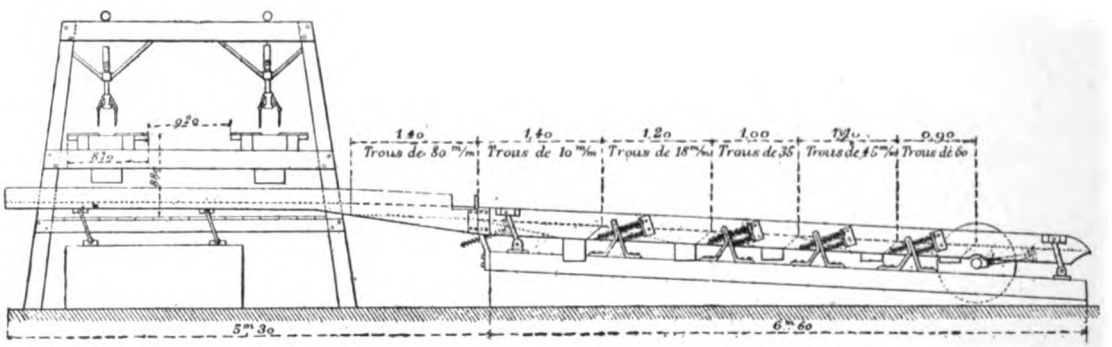

FIG. 893.—"KREISS" SCREEN AT LENS COLLIERY.

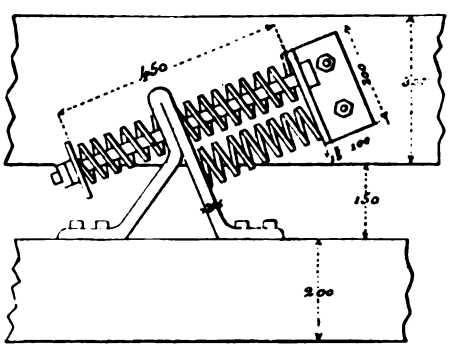

FIG. 894.—DETAIL OF SPRINGS.

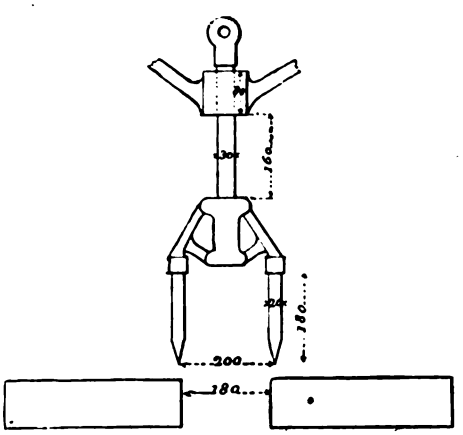

FIG. 895.—DETAIL OF BREAKING NEEDLES.

4. A minimum cost of upkeep.

During a period of fifteen months, from the setting to work of the screen, it was only found necessary to replace eighteen of the springs, and the screen dealt with 25,800 tons of coal.

The coal is passed over two breaking tables, where it is broken by a pair of "needles," a detail of which is shown in fig. 895. These needles are placed

immediately over an orifice in the plate, and fixed to a carrier which works in a vertical direction, being driven by a special motor. These needles make 160 strokes per minute, and each table breaks 20 tons an hour.

Undoubtedly this screen seems to be designed on right lines, as there is little friction, and consequently little lost energy, and the whole of the momentum of the screen is absorbed by the springs and given out again. It may be made to run at a high speed, and consequently with a very short stroke a number of vibrations could be set up so as effectively to separate the small, and at the same time allow the coals to pass quickly over the screen.

There is no doubt that screens of this class are quickly taking the place of the ordinary jigging screens and cleaning belts, as they reduce the height of heapstead, with consequent saving in capital expenditure and maintenance, the power required for their propulsion is small, and the moving parts can be easily balanced, and probably the only point which remains to be satisfactorily solved is a method of lowering the end of the screen into the truck for gentle loading, though Messrs. the Zimmer Conveyor Company even do this, with more or less success, as is shown in fig. 896, which shows the end portion of a conveyor, hinged and suspended for lowering, while fig. 897 shows this end in more detail.

The power required to drive a jigging or any vibrating screen is that required to accelerate the moving masses, and to overcome the friction of the parts. It may be assumed that the energy required to accelerate the mass during the first half of the stroke of the screen is destroyed in friction during the second half, each half-stroke being, of course, equal to a quarter of a revolution of the driving shaft. If

W = the weight of the screen and coal in pounds,
N = the number of revolutions of the driving shaft per minute,
T = throw of eccentric or crank in inches,

then the maximum velocity V of any part in feet per second will be

$$V = \frac{2\pi TN}{12 \times 60} = \frac{\pi TN}{360}$$

and the energy P in foot-pounds required to accelerate the mass

$$P = \frac{W}{64} \times \left(\frac{\pi TN}{360}\right)^2$$

which energy is to be developed every alternate quarter of a revolution, and the brake horse-power therefore will be

$$\text{B.H.P.} = \frac{4\,PN}{33{,}000}$$

which will be the average brake horse-power required. It is to be noted that this horse-power is merely that required for the moving screen, and does not allow for

friction of the bearings, &c., of the driving shaft, and the actual horse-power will depend upon the efficiency of the driving arrangement, which will vary from 50 to

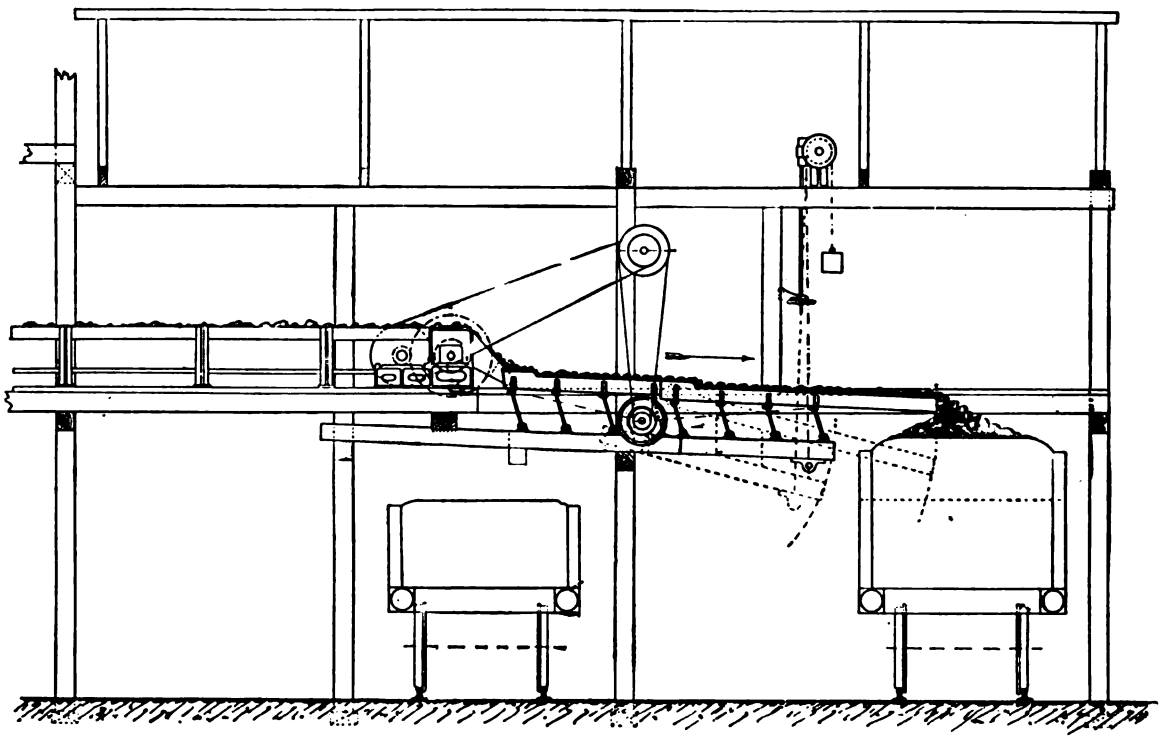

FIG. 896.

THE ZIMMER CONVEYOR AS A LOWERING DEVICE FOR LOADING COAL INTO RAILWAY TRUCKS.

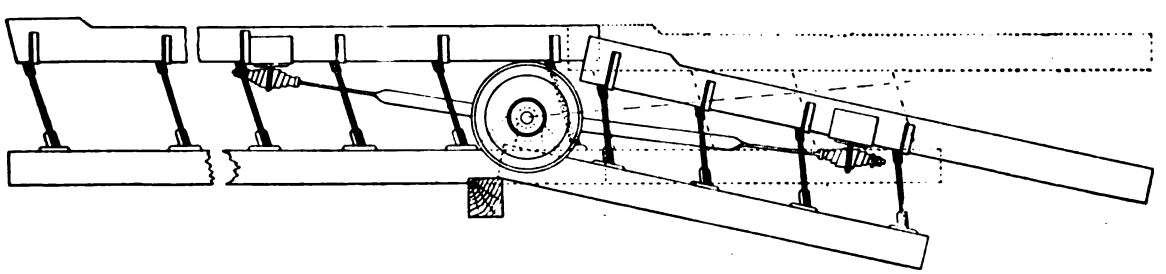

FIG. 897.—LOWERING DEVICE.

80 per cent.; in many cases, in fact, so little is the attention given to the design of such high-speed and hard-driven plant as screening machinery, that it is questionable if the efficiency exceeds 30 per cent. Assuming an efficiency of, say, 75 per

cent., which will allow for losses between the engine and screen-driving shaft, due to friction and belt drive, then

$$\text{Actual H.P.} = \frac{4\,P\,N \times 100}{33{,}000 \times 75}.$$

As will be seen from the foregoing, the energy is to be developed every alternate quarter of a revolution and the engine will in consequence be running light during the other quarters, and in order to equalise the load upon the engine the screen-driving shaft is usually provided with a flywheel. The function of the flywheel is to store energy with an increase of speed, and to give it out again with a reduction of speed, and it is evident that in the case of a jigging screen, the fluctuations in speed can only be very small. The energy P stored in a flywheel depends upon,

$$P = \frac{M\,v^2}{2g}$$

where M = weight of flywheel in pounds,
v = velocity, in feet per second, of mean radius in feet,
g = acceleration due to gravity = 32·2.

Further, if V' = maximum velocity of the flywheel,
V'' = minimum do. do. do.

and v = mean velocity as before $= \frac{2\,\pi\,R\,N}{60}$

$\frac{p}{100}$ = percentage of variation in speed from the mean up or down, so that $(V' - V'') = 2pv$,

then the energy given out by the flywheel in falling from V' to V''

$$P = \frac{2\,M\,p\,v^2}{32{\cdot}2}$$

and the weight of flywheel required to take in and give out P foot-pounds, with a given percentage variation of speed from the mean, up or down, or 100 p, will be

$$M = \frac{P\,g}{2\,p\,v^2}.$$

Take for example a screen—with coal—weighing 2,000 lb., and the driving shaft making 100 revolutions per minute, with a crank throw of 2 in. Here, for the screen,

$$V = \frac{3{\cdot}14 \times 2 \times 100}{360} = 1{\cdot}75 \text{ ft. per second,}$$

and

$$P = \frac{2{,}000}{64} \times 1{\cdot}75^2 = 96 \text{ foot pounds,}$$

and

$$\text{B.H.P.} = \frac{96 \times 4 \times 100}{33{,}000} = 1{\cdot}16,$$

or, allowing an efficiency of 75 per cent.,

$$\text{H.P.} = \frac{96 \times 4 \times 100 \times 100}{33{,}000 \times 75} = 1{\cdot}6, \text{ nearly.}$$

As P is equal to 96 foot-pounds, the flywheel must be capable of alternately giving up and storing this amount of energy, with a slight variation in speed. Supposing the difference or variation in speed to be limited to 1 per cent. above or below the average, which in this case is 100 revolutions per minute, and p therefore $= \frac{1}{100} = 0{\cdot}01$, and taking a mean radius of $1\frac{1}{2}$ ft. for the flywheel, then

$$v = \frac{2 \times 3{\cdot}14 \times 1{\cdot}5 \times 100}{60} = 15{\cdot}7 \text{ ft. per second,}$$

and

$$M = \frac{96 \times 32}{2 \times 0{\cdot}01 \times 15{\cdot}7^2} = 623 \text{ lb., or, say, 6 cwt.}$$

The connecting rods between the driving shaft and screen are usually rectangular bars of mild steel, and if long are very heavy, and the weight of these rods

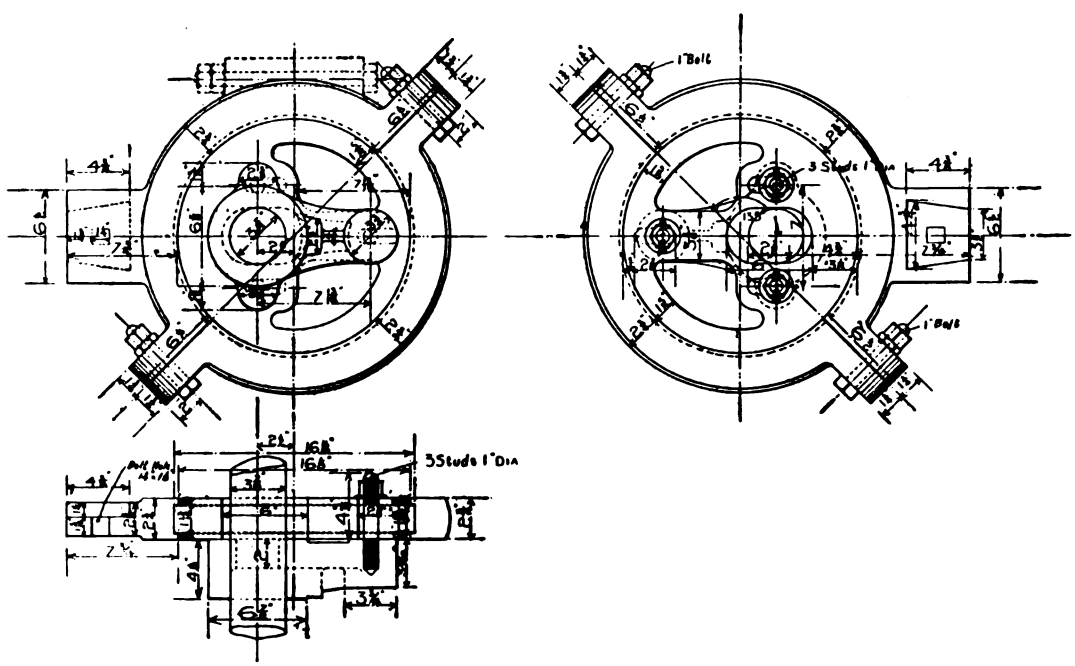

FIGS. 898, 899 AND 900.

should be taken as part of the weight of the screen, as they have to be stopped and started again twice in every revolution. In order to reduce the weight they are sometimes made of two flat bars of mild steel with distance pieces between, or, what is probably better, packed between with a piece of hard wood. This latter form makes a comparatively light and stiff connection.

It is very often necessary to alter the stroke of a jigging screen, and adjustable eccentrics are usually provided for this purpose. A crank-driven screen cannot

have the stroke altered. Figs. 898, 899 and 900 show one form of adjustable eccentric, consisting, as will be seen, of a block keyed to the shaft, to which the eccentric sheave is secured by means of three stud bolts, through slots. The arrangement is not a good one, as all the work is transmitted through these small stud bolts, and, further, the strap itself is particularly bad in design. The lugs joining the two halves together are weak, and a much better form of joint is shown dotted in fig. 898. The attachment to the rod is also bad; it should be bolted direct without the dovetail. Messrs. Campbell, Binnie and Co. have patented an excellent form of adjustable eccentric, which consists of one eccentric within another, so arranged that by loosening two bolts and turning the inner eccentric

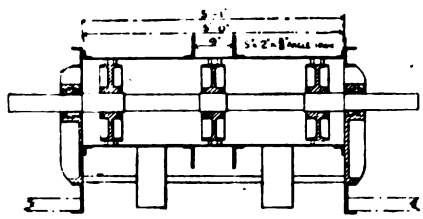

FIG. 901.

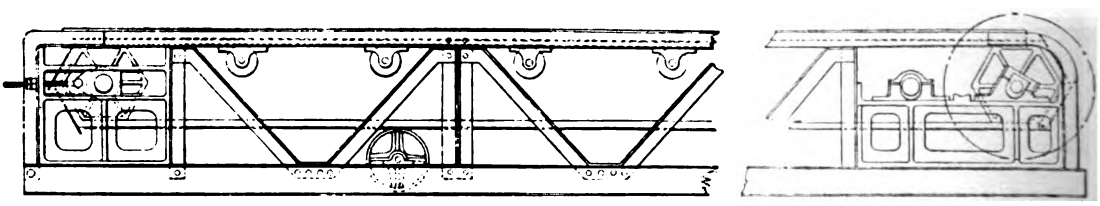

FIG. 902.

FIGS. 901 AND 902.—PLATE BELT.

within the outer, any adjustment may be obtained with a minimum of trouble, between the limits, as graduated upon a scale around the circumference of the strap.

Several types of coal-cleaning belts have already been described, and the selection of any type depends upon the class of coal to be dealt with and the thoroughness of the cleaning and sorting required. Where only large coal is required to be filled into the truck, then the " bar " type of belt is probably the best to adopt, as any small is removed and returned to the small coal belt automatically. Where two or three classes of coal, however, have to pass over the belt, then undoubtedly the very best type to adopt is the plate belt, with a well-arranged jigging screen that may be easily altered to suit the requirements. At the best, however, practically only " best," " unscreened," and " hand-picked "

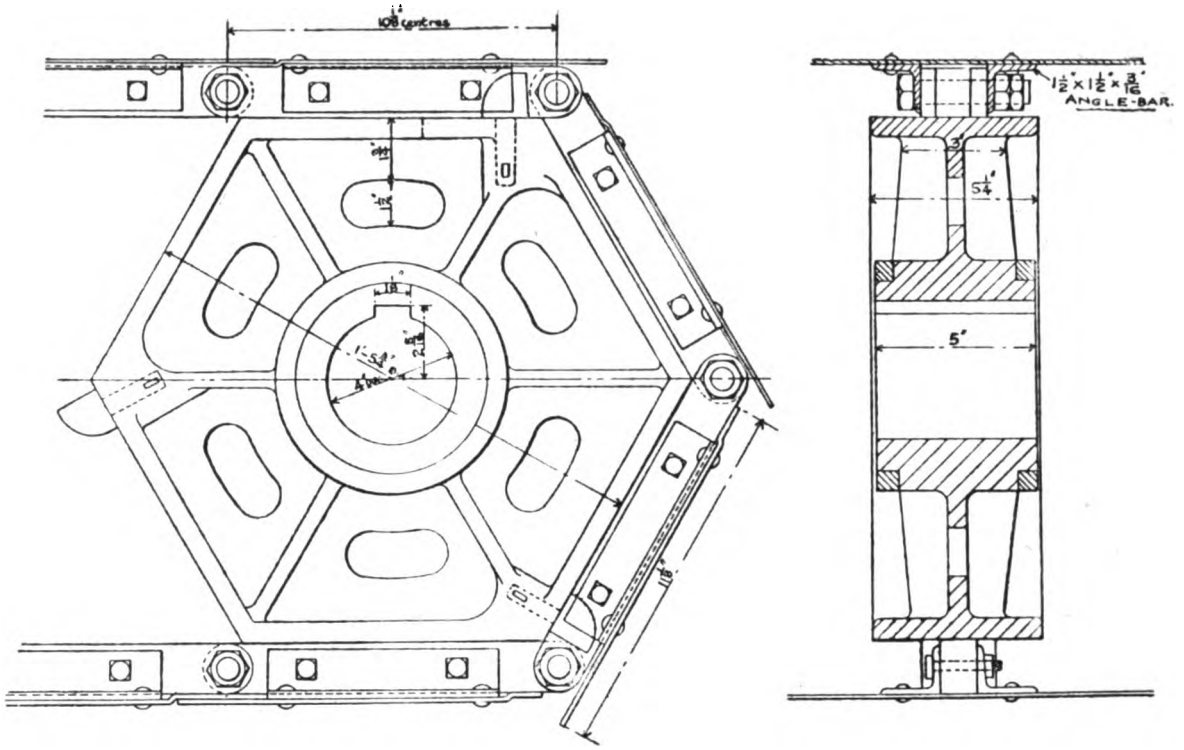

FIGS. 903 AND 904.—DETAIL OF DRUM AND CHAIN.

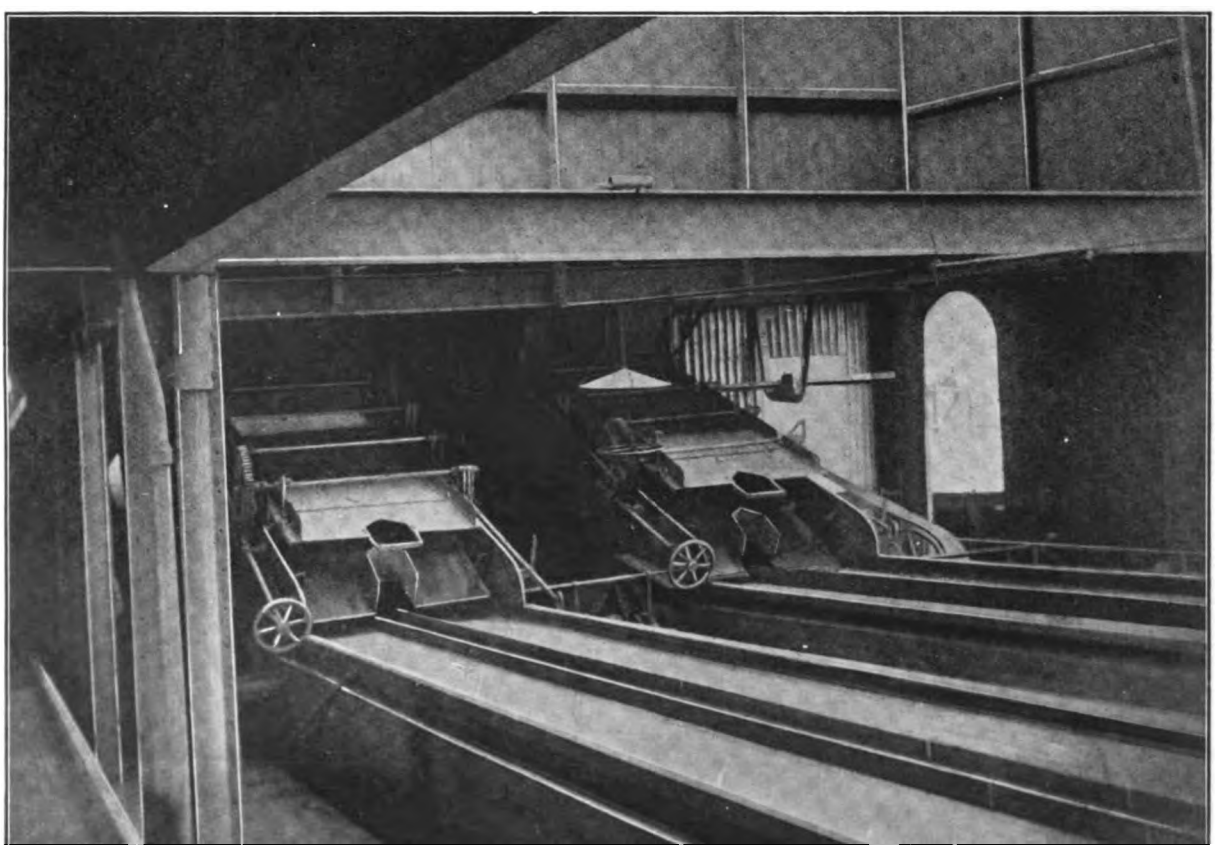

FIG 906.—SCREENING SHED.

classes can be made to pass over a single belt, as a jigging screen is not easily arranged to make several sizes of coal, and ordinarily this is done by changing the perforated plates on the screen. In Mulholland's screen two perforated plates with diamond-shaped holes are arranged to slide one on the other. The holes are the same dimensions in both plates, and consequently, if the plates are arranged so that the holes are exactly over each other, the maximum size is obtained; but by moving one plate, say ½ in., then it is evident, owing to the shape of the holes, that they will be reduced by a like amount. At the majority of collieries, however, the sizes of screens are fixed so as to take out all small below a certain size, different sizes being dealt with in different screens, with a cleaning belt to each, and any further sizing or sorting of the small is dealt with by separate machinery, which is without doubt the most satisfactory method. Further, if the small coal requires cleaning, this is best done by washing, in which case the sizing and cleaning is done at one operation, with a minimum of cost.

Figs. 901 and 902 show a cross section and elevation of another plate belt, which is extremely strong in design, and consists of channel bars at the top and bottom strongly braced together with angle bars. The end brackets are of cast iron built into the frame, as shown. Details of the drum and chain are shown in figs. 903 and 904, the former being made of cast steel, and fitted with driving horns or keys to engage with the single link of the chain—an important little detail which is too often overlooked, and it may be mentioned that Messrs. Campbell, Binnie and Co. have improved upon this by making the whole corner of the drum renewable. Each link has attached to it two pieces of angle-bar which support the plate, and it will be further noticed that the joggled end of the plate only touches the link. This arrangement gives a perfectly level belt, but they may be made with the plate touching the links, in which case the "joggle" is raised. As shown in fig. 901, the plates are fitted with a pair of angle-bars in the centre forming a division, the purpose of which is to receive the stones and dirt picked out from the coal, and deliver it into a trapped shoot at the delivery end of the belt. The arrangement, however, is not—for many reasons—a success, and where it has been installed has been abandoned.

Fig. 905 shows the delivery end of a pair of jigging screens and coal-cleaning belts, with the *débris* division, illustrating the method of forming the end of the screen, to prevent the coals getting into the division. The same view shows the suspended plate which is used in the making of unscreened coals, as mentioned in connection with fig. 880, and fig. 906 shows the screening shed with the pickers on each side. The raised platform allows the "keeker" or foreman to superintend the cleaning very effectually.

In order to avoid the joggle in the plates the links may be made as shown in

figs. 907 and 908, and as assembled together with the plates in fig. 909. In this case the links are made with a single eye at one end and a double eye at the other, and provided with two small lugs to secure the plate. The link is deeper at one end than at the other, by a fraction more than the thickness of the plate, so that one plate will overlap the one in front of it.

An objection to plain plates is that when the belt is inclined, the coal is liable to slip or roll back, which is prevented to some extent by adopting a joggled plate with the "joggle" outside, and the belt may be worked at an angle up to about 30 degs. from the horizontal for small coal, without any other attachment or means to keep the coal in place. Further, to increase the resistance to sliding, Messrs. Heenan and Froude corrugate the middle part of the joggle as shown in figs. 910 to 914, which also considerably stiffens the plate. The chain is of the double and single link type, each single, one of every pair of double links being formed with a flange to which the plate is secured by rivets, and at the end of each plate, top and bottom, wearing strips are riveted. Many manufacturers adopt this latter plan, to prevent the wearing of the edges of the plate by rubbing against the angle bar forming the top of the frame, which is the usual method of construction; reference to fig. 901, however, will show that if an angle bar be fixed to the ends of the plates, which has the advantage of making them very strong, it is not necessary for the plates to work between angle bars, and there is no wearing of the edges of the plates by rubbing. In any case one might ask, Why cannot sufficient rollers be provided effectively to prevent the plates touching the angle bars?

Considerable trouble is very often experienced with the wearing either of the links, or of the bolts connecting them. Sometimes the wear will take place in the double links, the holes elongating, or the bolt or rivet may be worn by these links so as to be nearly cut in two, or, what is more seldom the case, the bolt is equally worn by all three links, but on opposite sides, so that it becomes a very difficult matter to get them out. Lubrication is difficult, as they are in a position not easily got at, and, as a rule, they are seldom if ever greased in practical working. It is only a question of wearing surface, yet manufacturers persist in making very narrow links with extremely little wearing surface, and expect them to go for years with little or no attention! It is a simple matter so to design the links that fairly wide surfaces shall be exposed to wear, and it would pay over and over again for any colliery company to expend a little extra in price for such a type of link. Too often in this class of work the cheapest is very much the dearest in the end, to say nothing of the annoyance and stoppages caused by such cheap and inferior work.

Where it is necessary to load the coal gently to prevent breakage, the best method is by means of a radial or jib end to the belt. This, however, cannot be

FIG. 909.

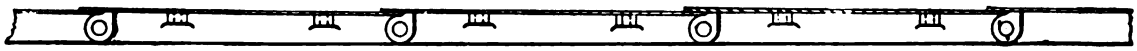

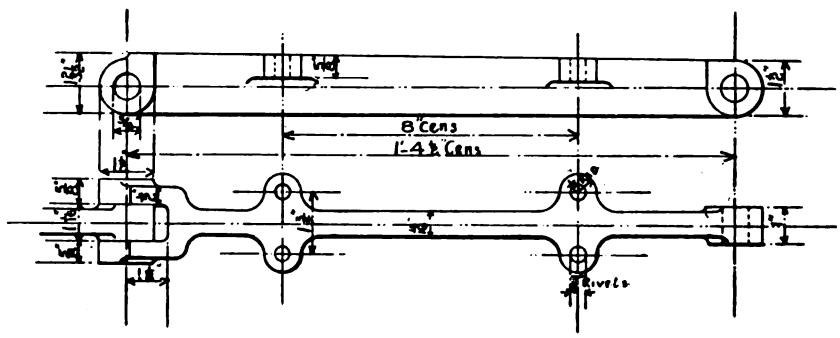

FIGS. 907 AND 908.

FIGS. 907 TO 909.—HEENAN AND FROUDE FLAT PLATE BELT LINKS.

FIG. 913.

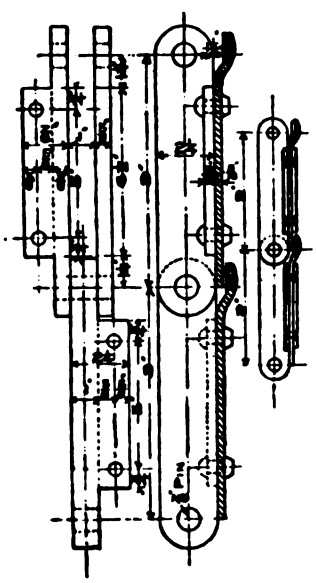

FIG. 914.

FIG. 912.

FIG. 910.

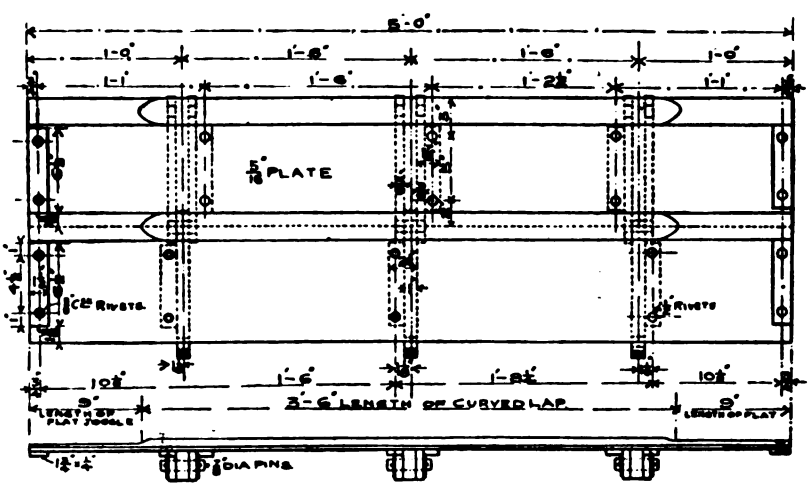

FIG. 911.

FIGS. 910 TO 914.—HEENAN AND FROUDE CORRUGATED PLATE BELT.

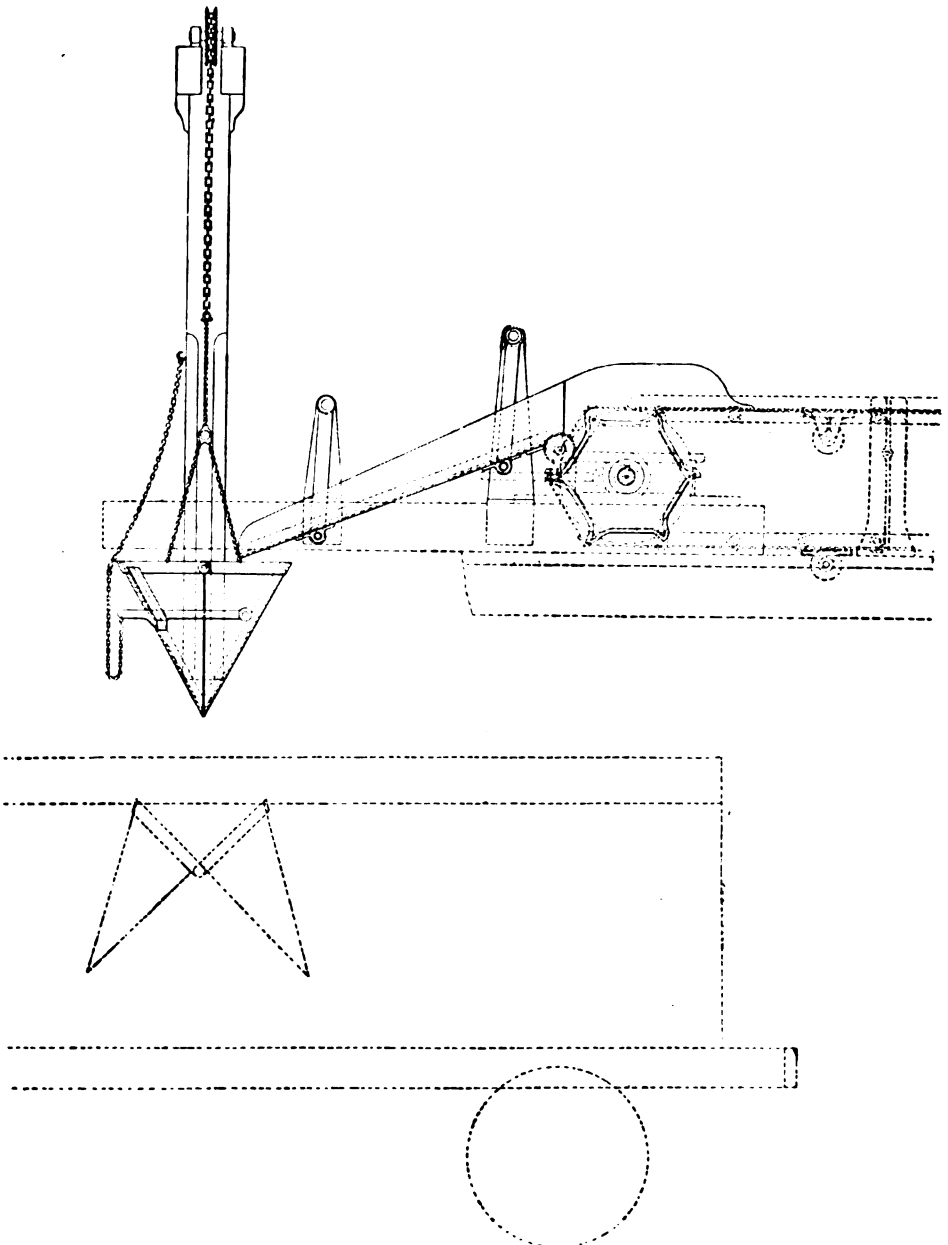

FIG. 915.—ARRANGEMENT AT END OF BELT FOR DISCHARGING BEST COAL.

applied in all cases, and it is necessary to have a fixed shoot. One objection to the ordinary plate belt is that a shoot cannot be placed close up to the plates, as they present flat sides when passing over the drum, and in consequence there is a small space through which the coal falls. One suggestion to get over this difficulty is shown in fig. 915. This consists of a shoot suspended in front of the end of the belt, and provided with rollers at the belt end which engage with a specially-shaped

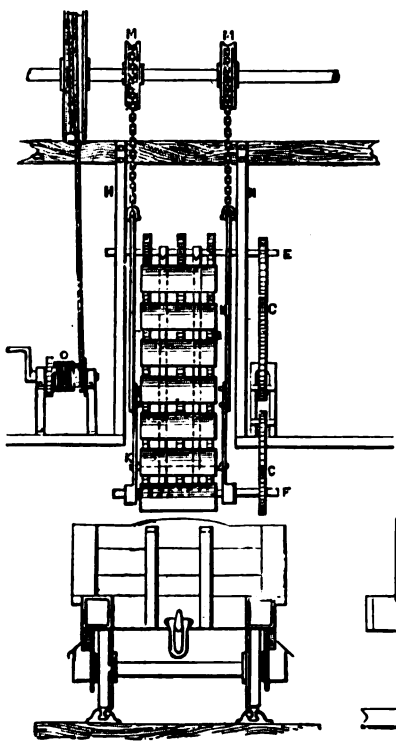

Fig. 916.

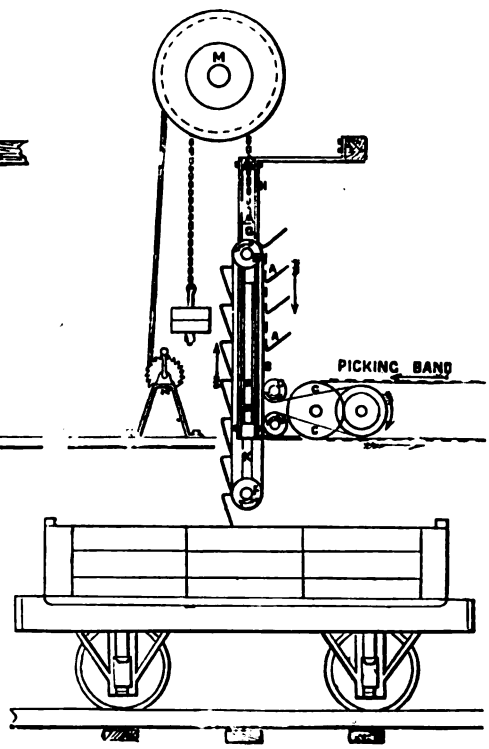

Fig. 917.

Soar's Coal-Lowering Apparatus.

wheel or "cam" fixed to the drum shaft. The coal is received in a box at the end of the shoot and lowered into the wagon, where it is discharged.

Soar's apparatus is shown in figs. 916 and 917, and, as will be seen, consists of hinged trays A A bolted to chains B, which are driven by the chain C. This chain is driven by means of gearing from the drum shaft of the belt, so that the relative position of the trays to the belt is always the same when the apparatus is being raised or lowered. The chains B pass over the two shafts E and F, the former working in two slide blocks G between the guide bars H H, and the latter work

in two distance pieces or extensions K of the slide blocks G as shown. The whole arrangement is suspended on chains and balanced by means of balance weights, the chain pulleys being fixed to an overhead shaft having a larger wheel fixed thereto, over which passes a few coils of the rope or chain, one end of the chain being fixed to the same, and is raised or lowered by a small hand winch.

Kochs' patent belt, however, as made by Messrs. Head, Wrightson and Co. Limited, gets rid of all difficulty in this connection, as the plates are so shaped that they form a circular end, so that a "shoot" plate may be placed close up to belt end. Figs. 918 to 923 show in detail the construction of the belt, from which it will be seen that the plates are curved and riveted to specially-shaped links A, B and C, B and C being the double links and the A the single, the chain thus being of the single and double-link type. One of the double links B and the single link A is provided with a flange, to which is riveted the plate.

The link A is triangular in shape, and its apex is threaded on to a shaft or roller spindle, a detail of which is shown, at the ends of which are mounted the rollers. These rollers, which carry the belt, run on angle bars secured to vertical standards forming the frame. The drums or "tumblers" are so made that the roller fits into the recess, and the prongs on the tumblers fit in between the double links of the chain. The belt is thus carried on the rollers, both on the carrying and return sides, the rollers being formed with a chamber and plug for oiling. Details of the cast iron end brackets, standard, &c., are also shown. These are bolted to a 9 in. by 3 in. wood runner, which is fixed to the floor of the building, but this method is scarcely satisfactory for a lasting job. A flat bar 5 in. by $\frac{3}{8}$ in. is fixed to the top of the standards and end frames, and in order to prevent the coal falling off the edge of the belt, is packed out a little to cover the edge of the plates, as shown; in other cases angle-bar pieces are riveted to the edge of the plate, as shown in the detail of the latter.

Even, however, with a belt of this make, the bottom plate of a fixed shoot cannot be placed so close to the plates of the belt as to prevent small pieces of coal falling through, as one plate may project slightly more than another, and Messrs. Head, Wrightson now make this plate curved at its upper end, and diagonal in shape, as shown in figs. 924, 925 and 926, instead of being cut square across. The result is that if a plate projects far enough out to catch the shoot plate, it only touches a corner, which "springs" sufficiently to allow it to pass; and the plate can be thus placed close enough up to the end of the belt to prevent any small coal passing. The figures show the construction of the diagonal curved plate and the fixed shoot, which is attached to the cast iron end bracket by means of an angle-bar cleat and $\frac{1}{4}$ in. gusset plate, the shoot being constructed of $\frac{5}{16}$ in. plates, and the curved plate $\frac{1}{8}$ in. in thickness.

PLATE LXXIX.—*(To face page 416).*

FIG. 919.

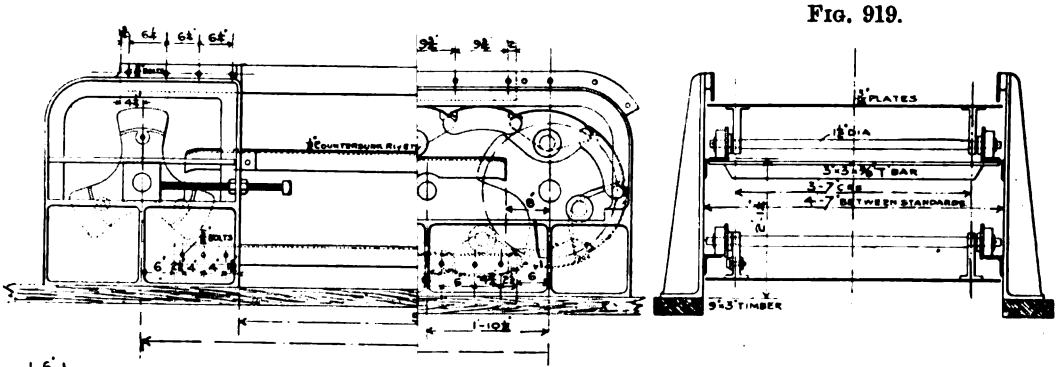

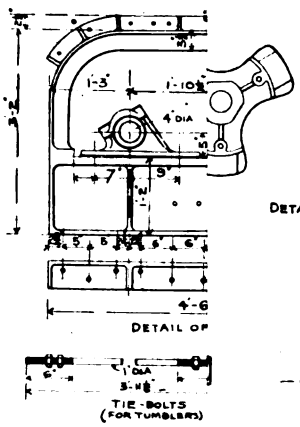

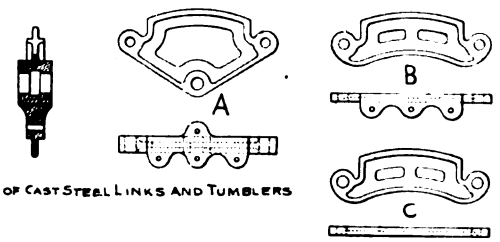

DETAILS OF CAST STEEL LINKS AND TUMBLERS

FIG. 920.

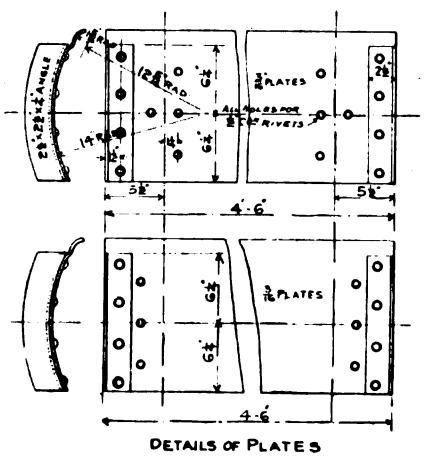

DETAILS OF PLATES

BELT.

PLATE LXXX.

FIG. 924.

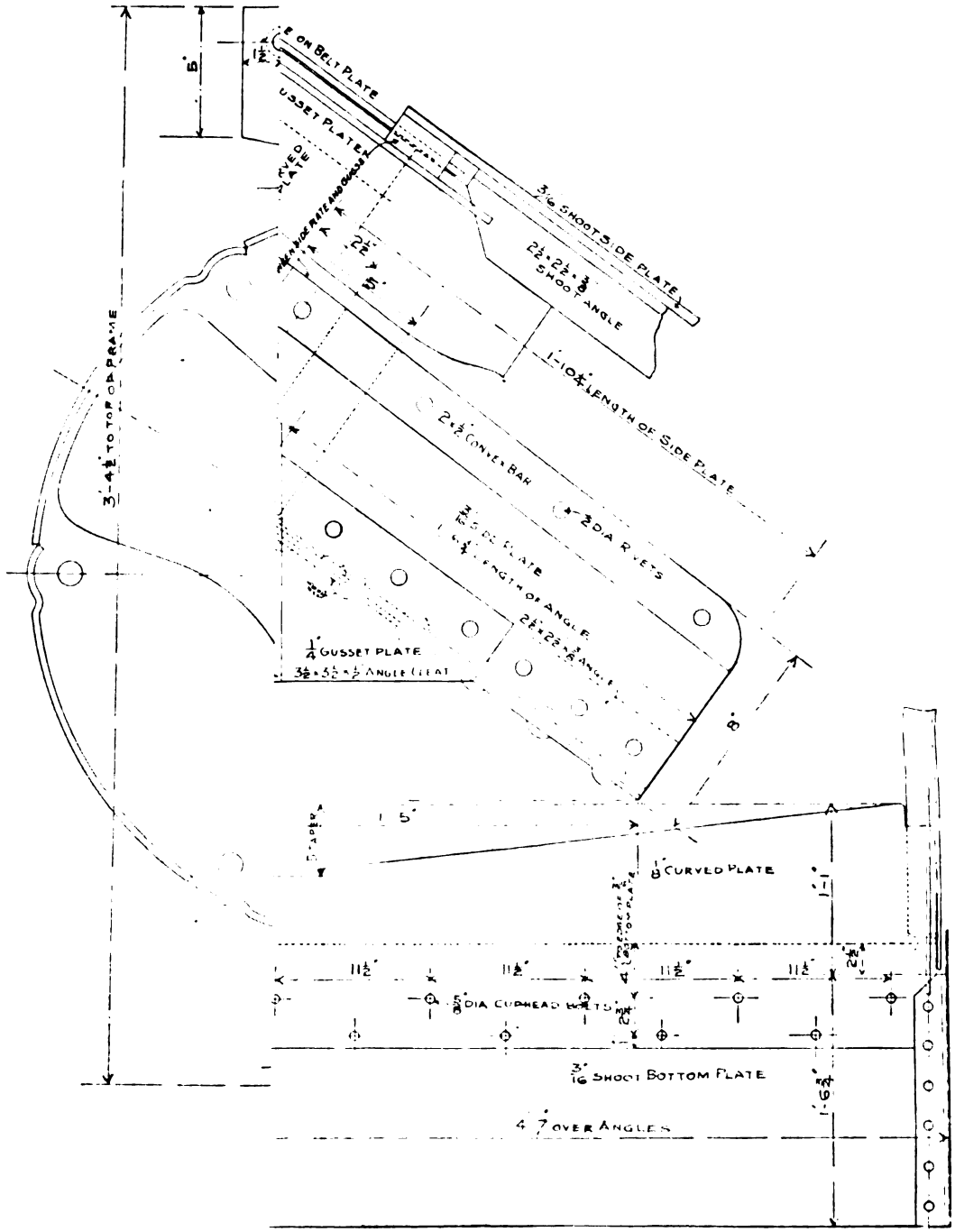

FIG. 926.

ND CO.'S CURVED PLATE SHOOT.

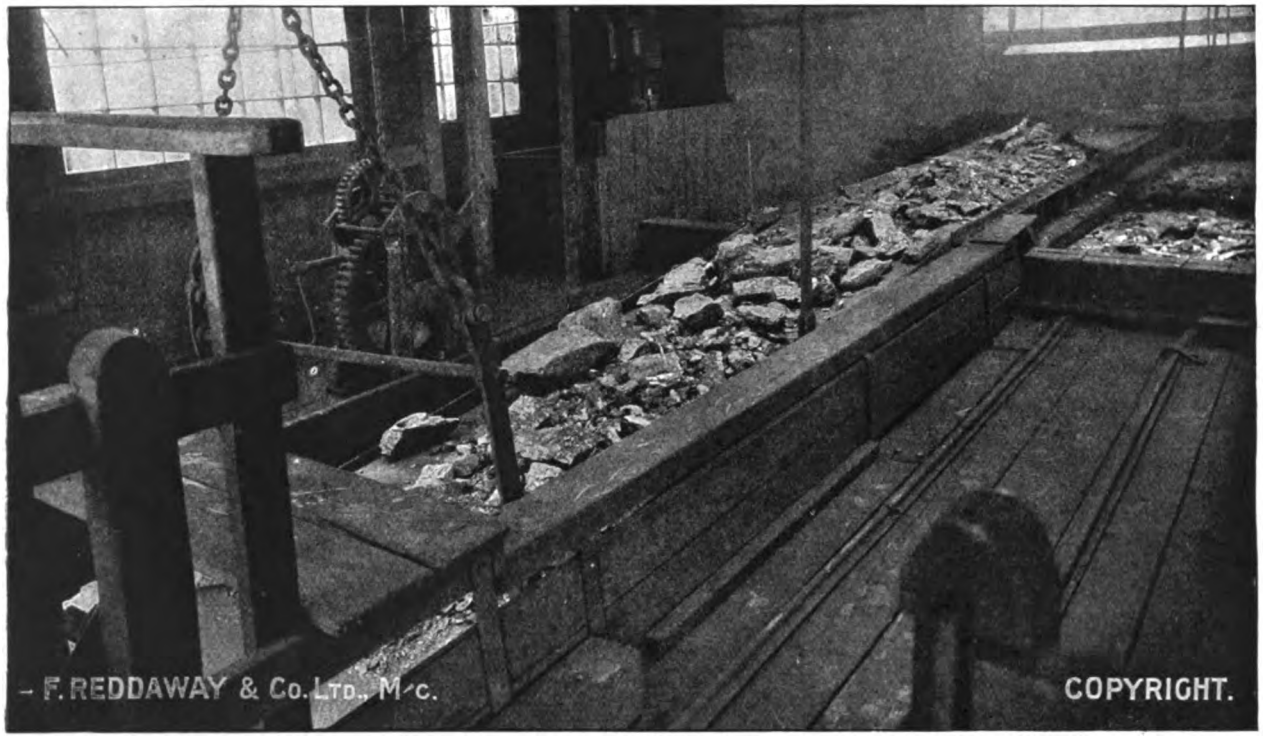

FIG. 927.—"CANVAS" COAL CLEANING BELT.

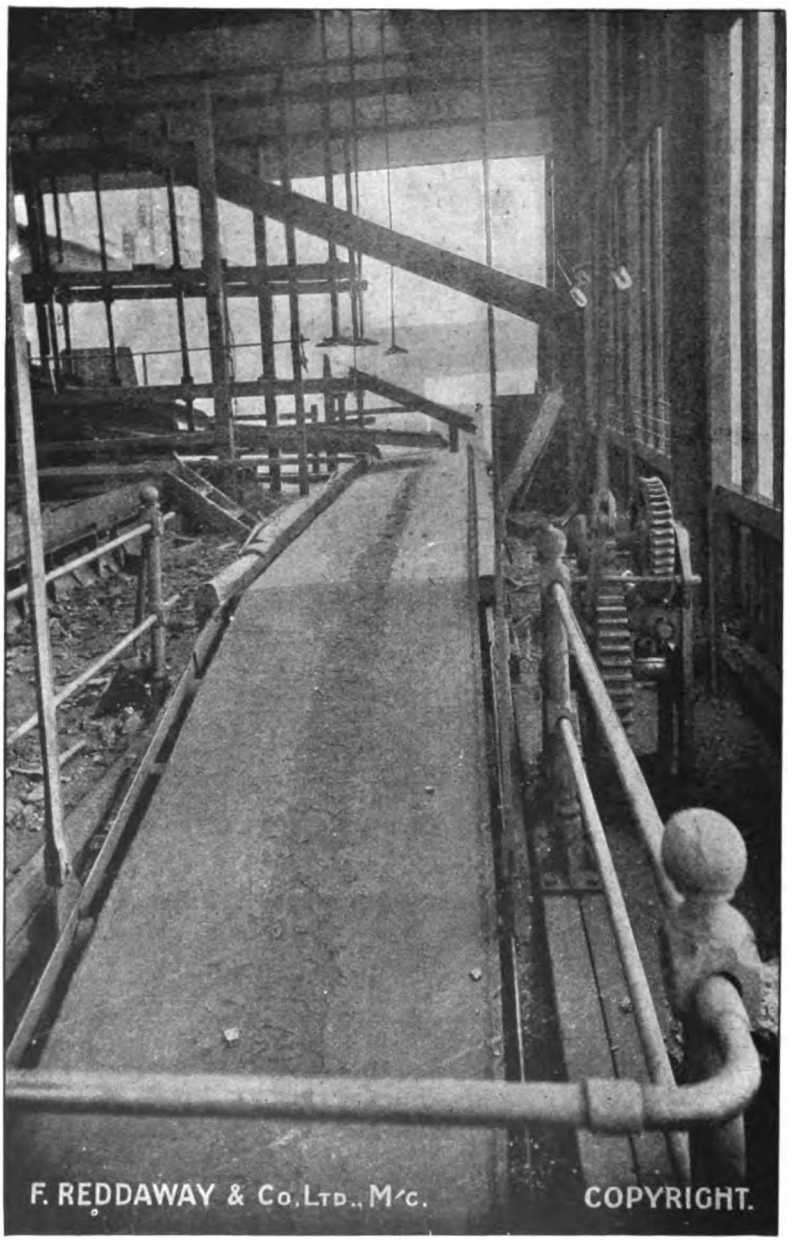

FIG. 928.—"CANVAS" COAL CLEANING BELT.

Another type of belt which perhaps has not received that attention which it would seem to warrant, is the "canvas" or "rubber" belt. These are well known and extensively used for the conveying of "small" and "nut" coal, but it is not so generally known that they are also successfully used for "best" coal-cleaning belts. The author recently saw some best coal cleaning belts, constructed from old flat hemp ropes, laid together parallel so as to form a belt 4 ft. 6 in. wide. The ends were plaited together so as to form an endless band, which passed over two plain circular drums lagged with wood. Straps of thin iron were used for binding the ropes together, and they seemed to answer their purpose very well indeed. They certainly have the advantage of cheapness, work smoothly, are easily arranged with a "jib" end, and all chain troubles are avoided, and there seems to be no reason why they should not have a fairly long life.

One objection to cotton or hemp belts is that they are affected by the humidity of the atmosphere, and need more attention than a steel plate belt; as in damp, moist weather they "take up" or tighten, and in dry, warm weather they "come out" or stretch, and the tightening gear has to be adjusted accordingly. Rubber belts are not affected in this manner.

Amongst other firms that have given attention to this class of belt are Messrs. F. Reddaway and Co. Limited, who have supplied canvas belts for coal-cleaning and conveying purposes, and figs. 927 and 928 show two coal-cleaning belts, one loaded and the other unloaded, the latter having been in use for a period of eighteen years. These belts are of stitched cotton specially prepared with hardened surfaces and edges, and they make another solid woven class of belt which can be prepared in the same manner and made entirely waterproof. Regarding the life of these belts, Messrs. Reddaway say :—"The average life is from eight to ten years, but this can be materially added to if well looked after in the form of giving the belt once every month, after the first six months' wear, a good coat of red oxide paint," which cannot be looked upon as extravagant or unreasonable.

To prevent the coals being broken as they fall from the shoot into the wagon, a telescopic shoot is sometimes used, consisting of an upper fixed shoot, and a lower one arranged so that it will slide underneath the fixed one, in such a way so that the shoot may be lengthened or shortened at will. Fig. 929 shows such a shoot as made by Messrs. Head, Wrightson and Co. As will be seen, it consists of a shoot in two halves, the upper half being fixed, while the other half is suspended from hangers below it. The angle bars on each side of the fixed portion are continued, to form "runners" for the rollers at the upper end of the hangers, and fixed at the outer end to some part of the structure. The lower portion is balanced by means of balance weights, the chain connecting them passing over a suitable drum, and is raised and lowered by means of the hand-wheel. To stop the supply of coal while

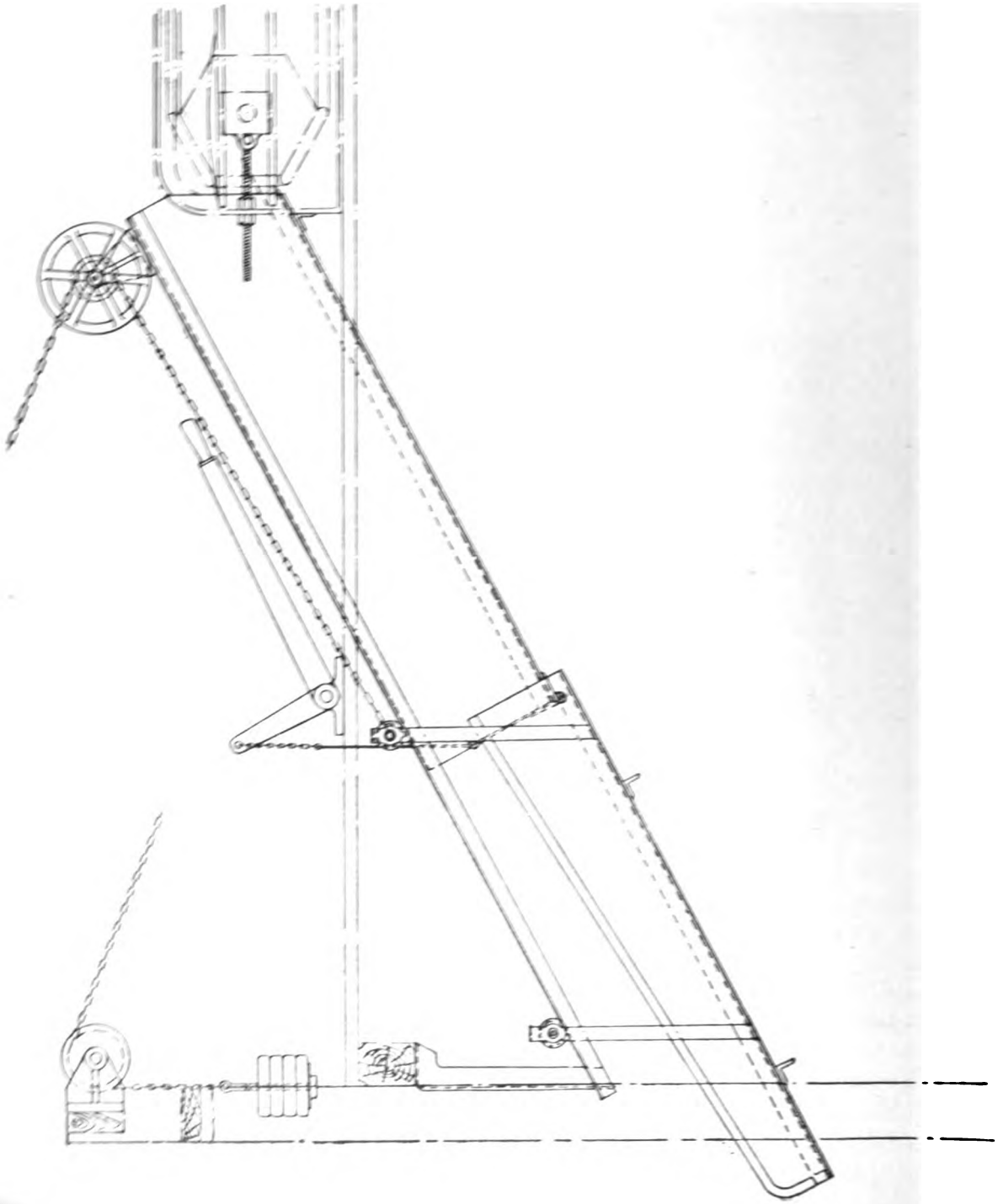

changing wagons, without it being necessary to stop the belt, a door is provided at the end of the fixed portion of the shoot, which may be closed by means of the hand-lever as shown.

Messrs. F. Reddaway and Co. Limited have also given considerable attention to the troughed form of conveyor, which is the usual form for conveying small coal, as shown in fig. 930. These belts are of canvas with a protective covering of rubber, as shown in fig. 931, which also shows the arrangement of the troughing rollers for supporting the carrying side of the belt and a parallel roller for the return side. The belt, however, does not so readily conform to the shape of the troughing rollers as

FIG. 930.—TROUGHED CONVEYING BELT.

the improved form shown in fig. 932, which, while of a uniform thickness throughout, has the protective covering of rubber thickest in the central portion of the belt, and is gradually reduced towards the edges. A belt of this construction readily conforms to the troughing rollers, and at the same time that part of the belt which is exposed to the greatest wear and abrasion is specially prepared to withstand it. This view also shows the guide rollers which are sometimes necessary when difficulty is experienced in keeping the belt in accurate alignment. These, however, are to be avoided if it is possible to do so, and, as a matter of fact, they cannot be used in connection with belts which are fitted with a throw-off carriage—for discharging at different points—as the guide rollers would prevent the belt rising out of the

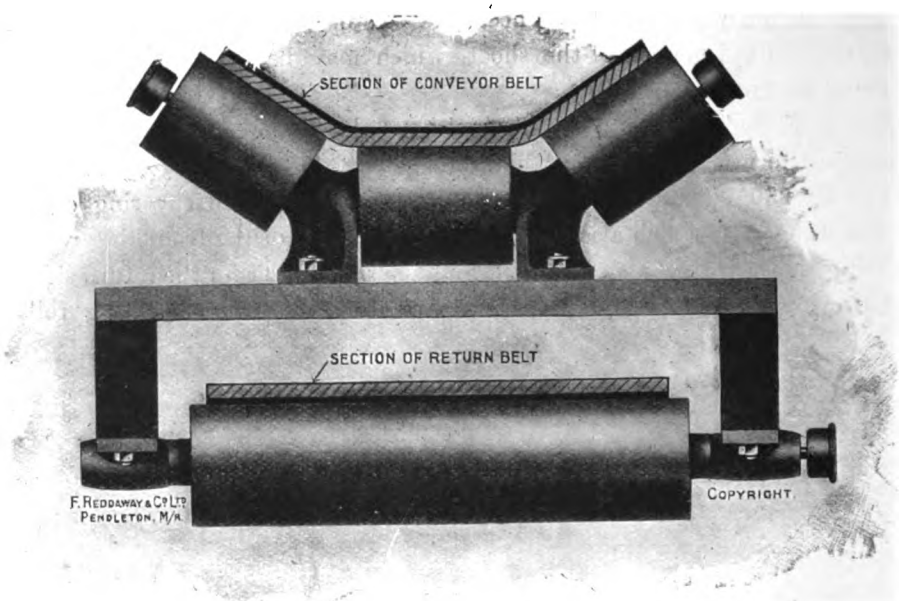

FIG. 931.—TROUGHED CONVEYING BELT.

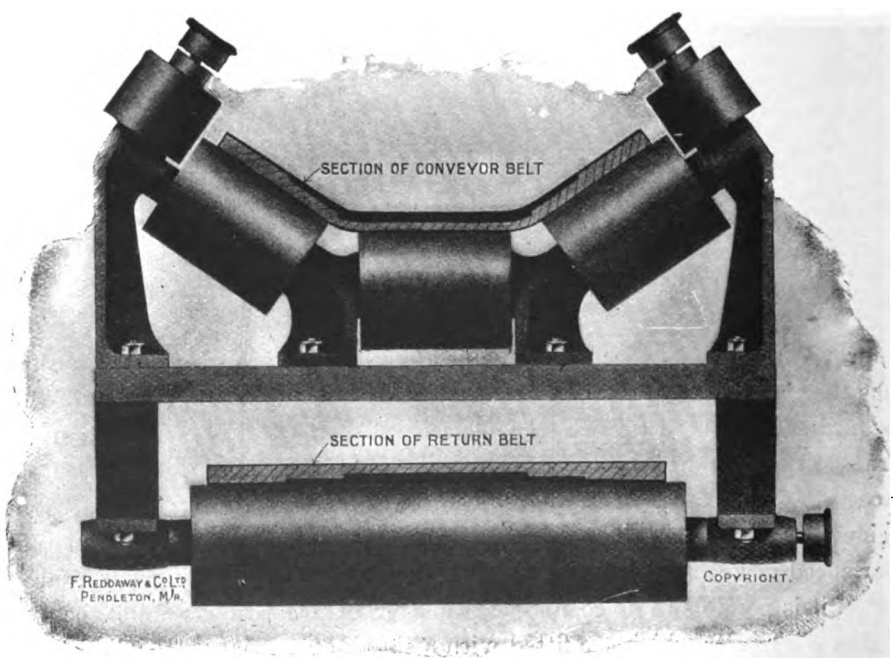

FIG. 932.—TROUGHED BELT WITH GUIDE ROLLERS.

troughing rollers, when about to run on to the parallel discharge roller. In order to get over the difficulty of bad alignment, and to enable the belt to better run into the trough from the end roller and *vice versâ*, Messrs. Reddaway have introduced a patented method of arranging the inclined rollers leaning slightly in the direction the belt is travelling, as shown in fig. 933, so that the belt is converged at a distant point proportionate to the angle the rollers are set. This method has been found to give every satisfaction, and when adopted guide rollers may be dispensed with.

Other belts consist of wire woven netting, which are used to remove the small as the coal is carried along the belt. Where it is necessary to do this, however, a much better form to adopt is the "bar" type as previously mentioned.

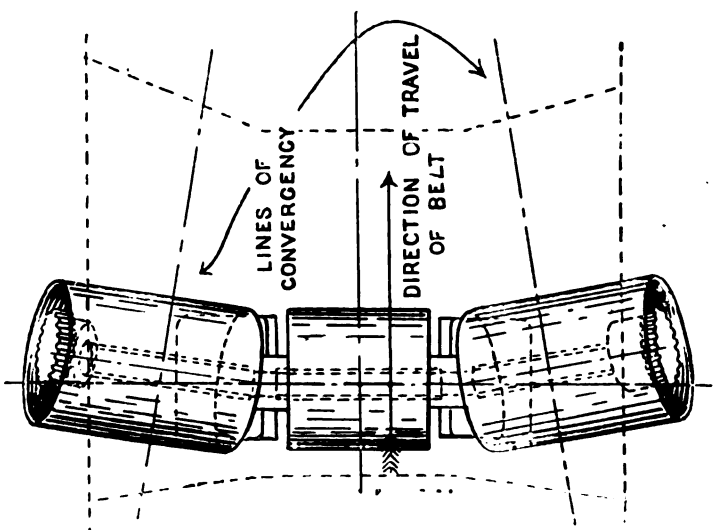

FIG. 933.—CONVERGING ROLLERS.

The power required to drive a conveying belt is practically all absorbed in friction, and consequently varies very considerably, depending upon the design of the belt. Ordinarily, however, there will be:—

1. Friction of roller.
2. Friction of chain and drums.
3. Friction of plates rubbing on angle irons.
4. Friction of drum shafts and gearing.

If

W = weight of chain, belt plates and coal in pounds,

N = number of rollers,

w = weight upon each roller = $\frac{W}{N}$

and if D = diameter of roller in inches,
d = diameter of roller spindle in inches,
S = speed of belt in feet per minute,
n = number of revolutions per minute

$$n = \frac{S \times 12}{\pi D}$$

C = co-officient of friction which, owing to the imperfect lubrication and to allow for friction of chain, may be taken as 0·05,

then $$N \times \frac{C \times w \times d \times \pi \times n}{12} = \text{foot-pounds per minute.}$$

The remainder of the friction cannot well be calculated, as it largely depends upon the design and construction of the driving gear, and can only be allowed for by assuming an efficiency of 50 per cent. in well-designed and constructed belts. For belts whose plates rub against angle bars, and are fitted with badly constructed chain and few rollers, the efficiency will be a very small percentage of the power required. Calling E the efficiency, then

$$\text{B.H.P.} = \frac{P \times 100}{33{,}000 \times E}$$

which is the B.H.P. required at the driving drum spindle.

The diameter of the drum shaft journals may be obtained from

$$4{\cdot}5 \sqrt[3]{\frac{\text{B.H.P.}}{N}}$$

where N = number of revolutions of shaft per minute.

The best method of removing the *débris* picked out of the coal is often a difficult question to decide. In very many cases it is thrown on to the floor, and afterwards loaded on the belt by hand and conveyed into a truck. In other cases it is filled into boxes fitted with trap doors, as shown in fig. 934, while again scraper conveyors working in a trough remove the material to some point where it can be conveniently dealt with—as, for instance, at Polmaise Colliery, previously described. The question is often complicated, through having to deal with inferior coal, which, though not good enough for sale, is of value for colliery consumption, and in consequence must be separated from the dirt; or again pieces of dirt may have a certain amount of good coal attached, which can only be recovered by putting through a breaker and washing. Obviously the system to adopt is that which will cost the least in working expenses, and it may be advisable to expend capital on conveyors, while on the other hand it will be cheaper to resort to hand labour. Generally speaking, however, it will be found that to adopt a slow moving conveyor to remove the dirt only, away from the cleaning belt, will be worth the capital expenditure.

The screening shed should be well lighted, and probably the best means is to light from the roof, as side windows gather the dust, and moreover, owing to their

FIG. 934.—DEBRIS BOXES IN SCREEN SHED.

liability to get broken, are more expensive to maintain. Figs. 935, 936, and 937 show the method of fixing roof lights, which are continuous nearly the whole length of the building. The glass is fixed in T glazing bars, which are secured by bolts to the roof purlins, and are overlapped by the sheeting at the upper end, but rest upon or overlap the sheeting at the lower end. A foot-board and hand-rail should be provided for cleaning.

The screening plant is usually driven by a steam engine, placed as near as possible in a separate house, which ought to be constructed as dust-proof as possible Room also should be provided to allow the attendant to have easy access to the working parts. In some cases small separate engines are installed, so that in case of a breakdown of one engine only a portion of the screening plant is stopped. The engines are for the most part simple slide-valve engines, often taking steam for

FIG. 936.

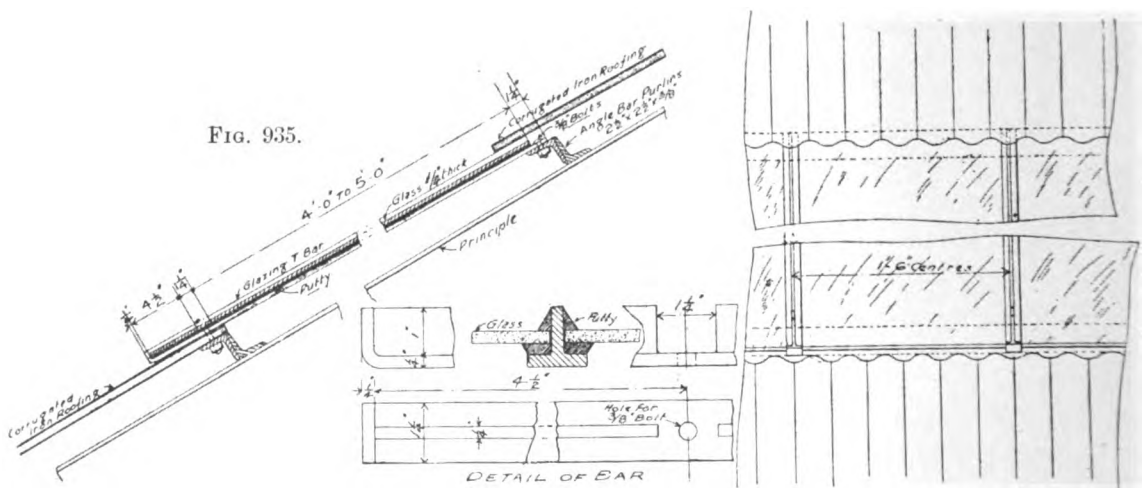

FIG. 935.

FIG. 937.

FIGS. 935, 936 AND 937.—DETAILS OF ROOF GLAZING.

practically the full stroke. A better plan, however, is to have a slightly larger engine and work the steam expansively, which gives a better economy in steam consumption, and, the parts being stronger, there is practically no risk of breakdown. In fact, a screen engine is working under very favourable conditions for economical steam consumption.

In order to avoid frequent stopping of the engine, when it is required to stop a belt or other moving part, easy starting friction clutches should be fitted to the belts and screens, so that any one may be stopped without interfering with the

remainder of the machinery. Of clutches, however, the ordinary "claw" type should be avoided, as they are a positive source of trouble, especially if they are arranged to be put in while the machinery is in motion. Probably the best type of clutch is the revolving-band type, as it is simple, easy to keep in order, starts up smoothly under full load, and, what is of very great importance in all colliery engineering, can be easily repaired by the colliery mechanic in case of a breakdown.

Latterly, however, the electric driving of screening machinery has been adopted, and has many advantages, though probably more expensive in first cost. Both continuous-current and three-phase motors have been installed, the latter being very suitable indeed for this duty. The advantages of electric driving are :—

Avoidance of long lines of shafting, with often heavy losses in transmission.
Division of the work into small units, thus reducing risk of total stoppage.
No heavy foundations required.
Easy control of the plant.

In an installation recently designed by the author, two motors were installed to drive the plant, one driving the tub creeper and the other the jigging screen and coal belts. A separate motor worked a long tub creeper conveying the tubs from the pit to the screens, and another worked a tub hoist, to raise material and lower tubs to the surface level—in all four motors. The controllers as well as the main switchboard were placed in a separate house, and signals were arranged from any part of the heapstead to the attendant in this house, so that he could start and stop any one of the motors. The main switchboard consisted of a feeder panel, with ammeter, voltmeter, three-pole main switch (breaking in oil) and fuses. A separate panel was provided for each motor, and another for lighting. The motors are thus controlled by one man from one point, responsibility is fixed, and unauthorised interference is prevented. The motors are fully enclosed, well up to their work—it is a great mistake to buy a highly-rated motor, and fully 75 per cent. of the trouble experienced in colliery electrical plant is due mainly to this cause—and the speed reduced by back gearing, and connected to the driven shafting by belting. The switchboard and controllers are placed in a special house built of ferro-concrete.

At another colliery the motors are coupled direct to the driving shaft, through worm gearing, but a better arrangement would be to use spur gearing, the pinion on the motor shaft being of raw hide. In all cases the motors should be very low rated, totally enclosed, and the gearing machine-cut and enclosed in close-fitting cases. They should if possible be controlled from one point.

The dimensions of shafting for transmitting power may be obtained from

$$\text{Diameter} = 4{\cdot}5 \sqrt[3]{\frac{\text{H.P.}}{\text{N}}}$$

where H.P. is the horse-power transmitted, and N is the revolutions per minute.

Bearings should be one and a-half times the diameter in length, and of the self-oiling type. Messrs. Campbell, Binnie and Co. are now making self-oiling bearings which will work at a slow speed, the lubrication being perfect. The adoption of such a bearing effects a considerable saving in oil.

Probably the most important machines of all installed at a colliery are the weighing machines, as often a considerable difference exists between the weight of coals as weighed in the tubs at the pit mouth, and the weight loaded into the trucks. These two weights should, of course, as nearly as possible correspond. It is very important, therefore, that these machines be carefully constructed of the very best material, particular attention being given to the working parts, and that they be kept in thorough repair, as it is easily seen that a slight inaccuracy in weighing may amount to a serious loss in the case of large outputs. The makers of these machines usually contract to inspect and maintain them in order for a small annual charge, and it is the worst form of false economy to begin cheeseparing with the weighing machine. It is a wise plan to put them in the hands of reliable manufacturers, and, making them responsible, see that they rigorously carry out their bargain.

The essential qualities necessary in a colliery weighing machine are simplicity, strength, facility for quickly and accurately weighing moving loads, and freedom from liability to get out of order.

Figs. 938, 939, and 940 show the construction of a tub-weighing machine by Messrs. W. and T. Avery Limited with a capacity of 40 cwt., the platform being 4 ft. by 2 ft. 6 in. The platform is fitted into a strong cast iron frame 9 in. in depth, with a broad flange at the top and strong brackets at each end from which the triangular levers are suspended. To obviate any tendency for the load to tip the platform when the tram is on the edge, these brackets fit into pockets in the end frames, so that the middle knife-edge of the levers, upon which the verges of the platform rest, are brought very close to the edge of the platform.

The platform is of cast iron of strong section, the underside being provided with projecting pieces or " verges " fitted with hardened steel bearing blocks, which rest upon the knife-edges of the levers, and is strong enough to carry the full load without material deflection.

This platform rests upon the cast iron main levers, which are of a strong section and provided with hardened steel knife-edges, as before mentioned. They are suspended from the brackets in the end frames by means of wrought iron links, with hardened steel bearing blocks welded in. They are triangular in shape, and the inner or apex end of each lever is coupled to the cross transfer or balance lever by means of wrought iron links with hardened steel knife-edges—all points of suspension, in fact, are knife-edges of hardened steel which rest upon hardened steel

PLATE LXXXI.—(*To face page 428*)

FIG. 938. IG. 939.

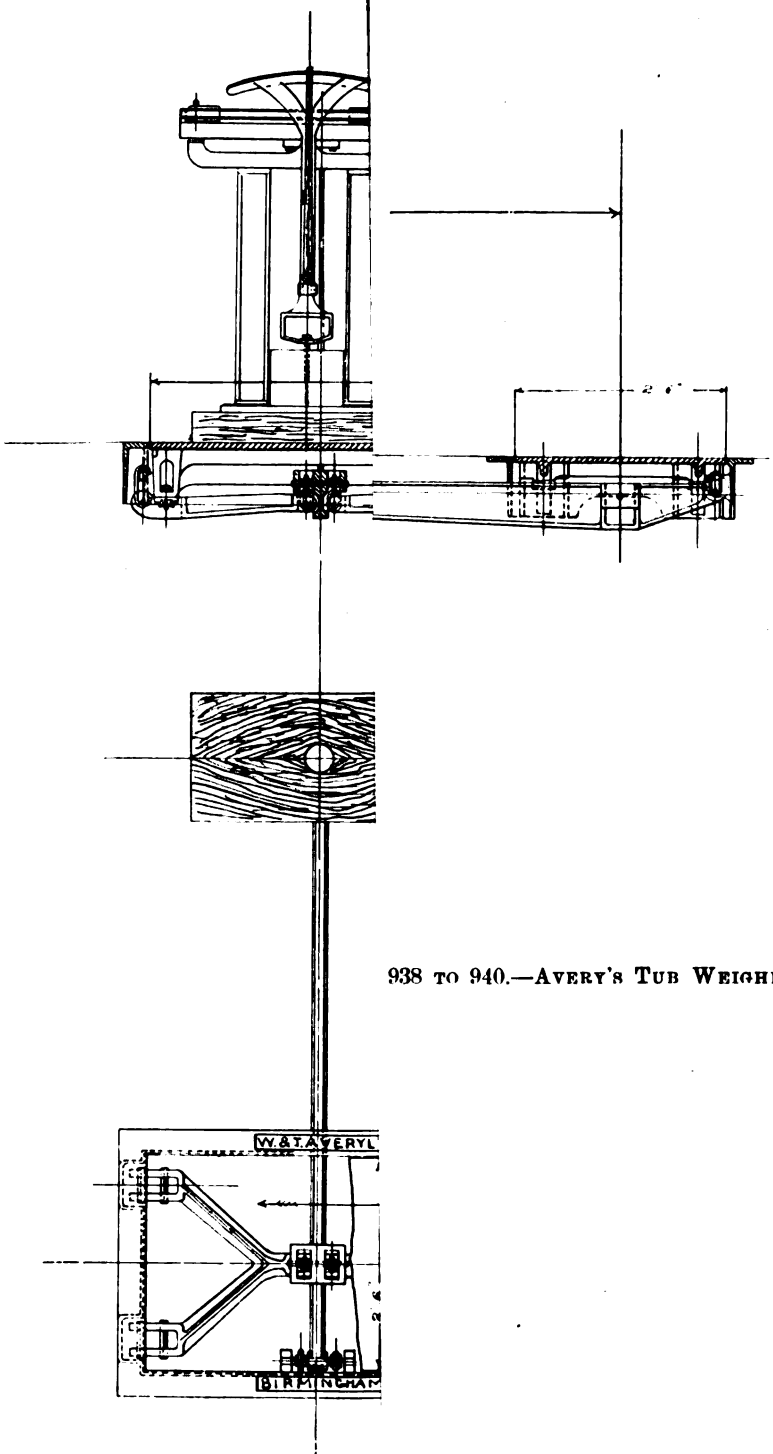

938 TO 940.—AVERY'S TUB WEIGHING MACHINE.

FIG. 940.

bearing blocks throughout the machine. The transfer lever is suspended by links from a wrought iron bar carried in a bracket in the side frame.

The machine is fitted with the makers' patent automatic self-indicating steelyard, which is designed to prevent violent oscillation and facilitate the rapid weighing of the tubs, the tare weight of which is the same. The indicating quadrant is so arranged that the clerk can read off the weights and enter the same without removing his position, which is necessary for speed, while accuracy is ensured by making the sliding poises on the steelyard adjustable to 10 cwt., and the actual net weight of coal in the tub is shown on the quadrant by means of a pointer. The quadrant is graduated from 10 cwt. to 25 cwt. in divisions of 28 lb. each, thus allowing the small loads of 11 cwt. or 12 cwt. to be weighed, and also the large loads of 20 cwt. to 25 cwt., without moving the poise on the steelyard.

An adjustable tare-slide up to 10 cwt. is fixed to the back of the steelyard for balancing the tare weight of the tubs.

Truck weighbridges are of two kinds, one in which the weight is read off a large dial, and the other in which the weight is ascertained by a sliding poise upon a steelyard. Both types are extensively used, though probably the steelyard type is most in favour. For quickly weighing wagons there is no doubt the dial type is the most suitable, as the weights are readily read off by the weighman without his moving or having to operate the poise. With the lever type it is necessary for the weighman to have assistance to book the weights as he reads them off, after moving the poise. One very great objection to the dial type was that the oscillation due to a moving truck was so great that accurate weighings could not be obtained without having to stop each truck on the platform, which means a serious delay if a large number of trucks have to be weighed, and more especially when the gradients of the railways are such that it is necessary for a locomotive to haul the train over the weighbridge, to say nothing of the number of men employed and the serious wear and tear that a locomotive receives when engaged in this class of work. Although there may be less labour required for working the dial machine, there is one advantage of the steelyard or lever machine, and that is that the assistant as he books the weights checks the weight given him by the weighman, and thus guards against possible error. Another point is that the poise on the lever will still indicate the weight after the load has been removed, which is sometimes useful for testing or checking purposes, whilst with the dial machine the pointer always returns to the zero position on the removal of the weight. In weighing moving loads the desk for the assistant is placed near to the window so that he can read the tare weight of the truck as it passes on to the weighbridge, or it may be called out to him by the weighman. The latter then operates the poise and noting the weight, quickly subtracts the tare mentally, and calls out the net weight to the assistant, who books it,

Fig. 941.

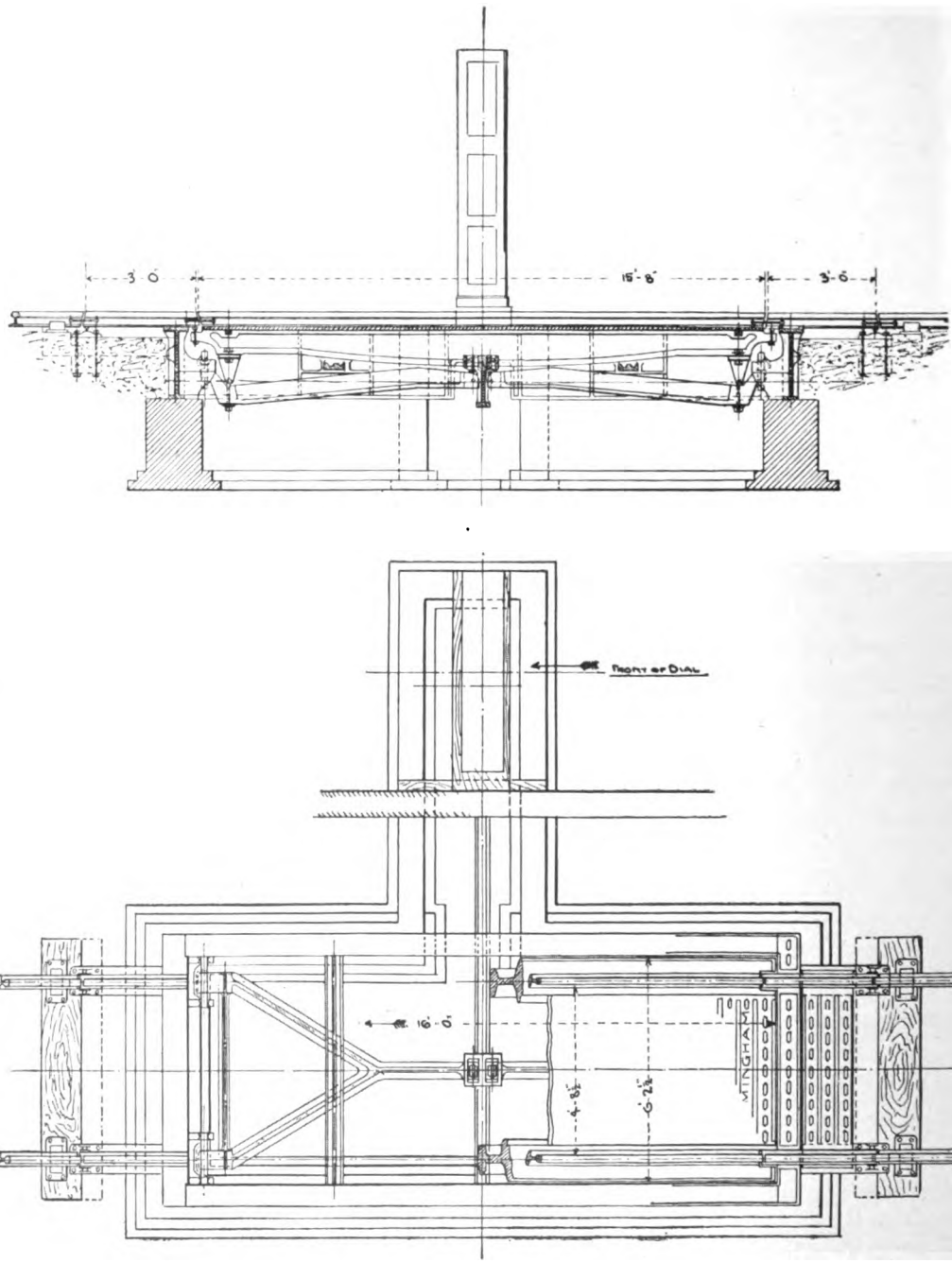

Fig. 942.

Figs. 941 and 942.—Messrs. Avery's Dial Weighbridge.

adds the tare, and calls out the gross weight to the weighing clerk, who still has the poise resting in the balancing position, and he knows at once, therefore, that the weight is correct,

In Messrs. Avery's dial weighbridge, shown in figs. 941, 942, and 943, an improvement has been introduced which removes the difficulty of oscillation of the pointer. This is obtained by providing at each end of the platform short lengths of rails, between the permanent rails and the rails fixed to the weighbridge platform. These short lengths are at their extremities fitted with hardened steel knife-edges, which at one end rest upon hardened steel bearings fitted into pedestals fixed to the permanent way, and at the other upon hardened steel bearings seated upon the

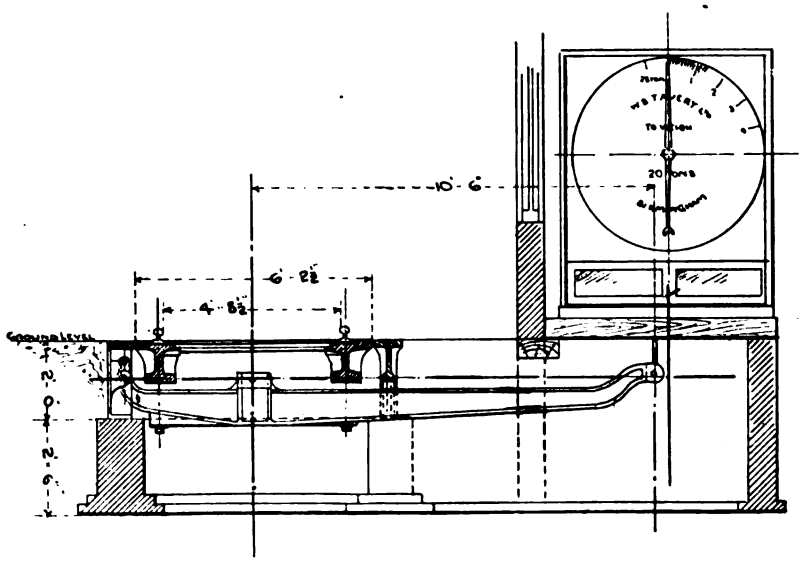

FIG. 943.—MESSRS. AVERY'S DIAL WEIGHBRIDGE.

girders of the platform. The effect of this is gradually to transmit the load to the levers of the weighbridge, and so give a steady movement to the finger of the dial, and enable it to settle more quickly than would obviously be the case if the maximum load were suddenly transferred to the platform of the weighbridge, as is ordinarily the case.

The weighbridge is of the three-lever type, and, as will be seen on reference to the drawings, is constructed on the same principle as the tub machine just described, which allows the platform to swing in the direction of the moving load, and thus prevents undue wear on the knife edges. The under work is contained in a strong cast iron frame 24 in. deep, with broad flanges on top and bottom, and stronger brackets at each end for carrying the rockers from which the main levers

are suspended, and loose bearings are provided on these brackets for convenience in replacing. The platform consists of two massive girders to which the rails are fixed, the space between them being covered with a cast iron chequered plate, and are fitted with cast iron verges with hardened steel blocks for bearing on the lower knife edges, the meeting surfaces being accurately machined, and the verges bolted to the girders.

The main levers are connected to the transfer lever by means of wrought iron shackles, but at the other end rest upon cast iron rockers, fitted with steel bearing blocks, for supporting the fulcra knife edges of the main levers in such a manner as to allow the platform to swing freely in the direction in which the load is moving.

The knife edges and bearing blocks are of specially-prepared welding cast steel, and are rigidly fixed in position, the knives being fitted in recesses in the levers and firmly secured by means of screwed wrought iron shanks and nuts. The weight of the platform main levers, &c., is balanced by means of an auxiliary lever and balance weights No steel springs or steel band connections are used, so that there are none of the disadvantages attendant upon their use, and trains of trucks may be weighed when running at a speed of 2 or 3 miles per hour.

Figs. 944, 945, and 946 show Messrs. Avery's self-contained steelyard weigh-bridge to weigh 30 tons, with disengaging gear. The construction of the machine is practically the same as the dial machine, with the exception that the short lengths of rails are omitted and that a steelyard takes the place of the dial. The platform is 14 ft. in length by 6 ft. 2½ in. wide, and strong brackets are arranged in the frame to receive the girders when disengaged by the relieving gear as shown in fig. 944, so that the platform forms a fixed and immovable bridge, and wagons can be passed over without causing any shock or wear to the knife edges or weighing parts.

The index plate of the steelyard is graduated up to the full capacity of the machine, and the weighing is effected by means of sliding poises on the steelyard, a large one reading in tons and hundredweights and the smaller in quarters. These poises are fitted to the makers' patent steel notched protection bar, as shown in fig. 947, which is a notched bar fitted to the back of the steelyard for preventing wear and preserving the accuracy of the graduation grooves. The notches in the protection bar and the graduation grooves are made to exactly correspond by special machinery, and when moving the sliding poise for weighing, the positioning nib A is prevented by the protection bar from coming into contact with the steelyard, except when the nib B drops into a notch, the fall of the sliding poise is then guided by the notch so that the positioning nib A drops exactly in the centre of the V-shaped groove on top of steelyard, thus entirely obviating the possibility of the groove on the steelyard getting damaged and thereby causing untrue readings.

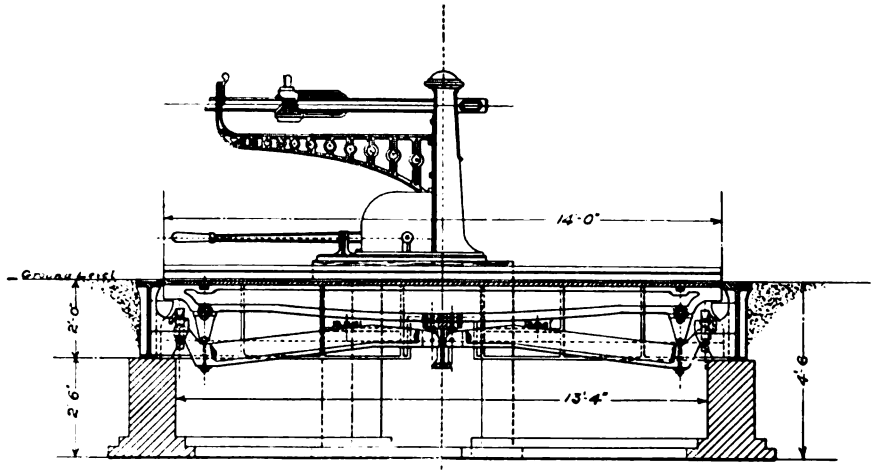

FIG. 944.

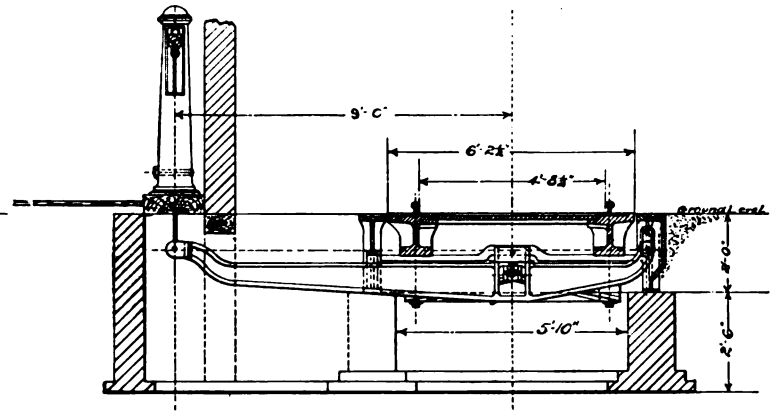

FIG. 945.

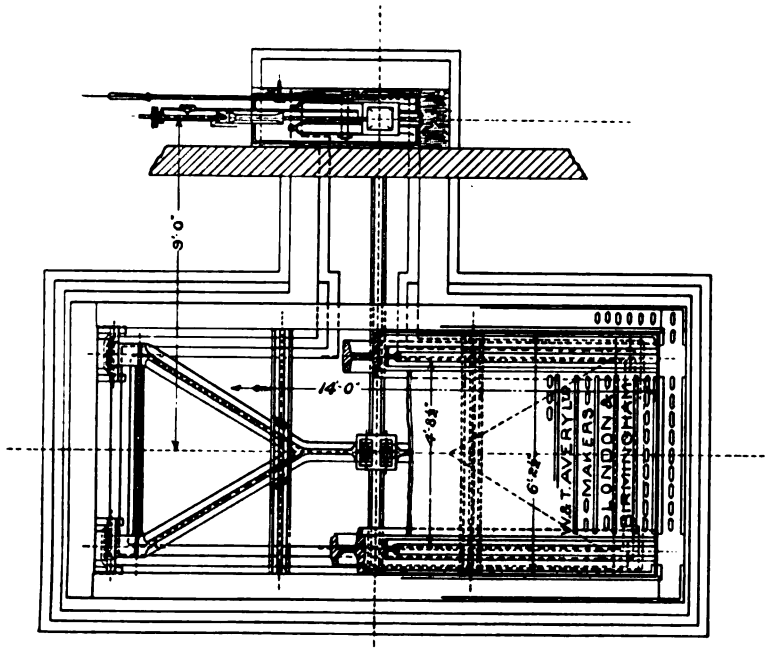

FIG. 946.

FIGS. 944. 945 AND 946.—MESSRS. AVERY'S STEELYARD WEIGHBRIDGE.

The poise is easily moved by means of the handle, the nibs being lifted out of the notches by merely pressing the spring lever against the handle.

With the introduction of large wagons by the railway companies, having carrying capacities of 30 tons and upwards, it has become necessary to introduce weighing machinery to deal with them, and figs. 948, 949, and 950 (Plate LXXXII.) show Messrs. Avery's patent combined weighbridges, which have been specially designed for colliery conditions, and will weigh either a single load up to 30 tons, or a load up to 60 tons on the two weighbridges on the same steelyard.

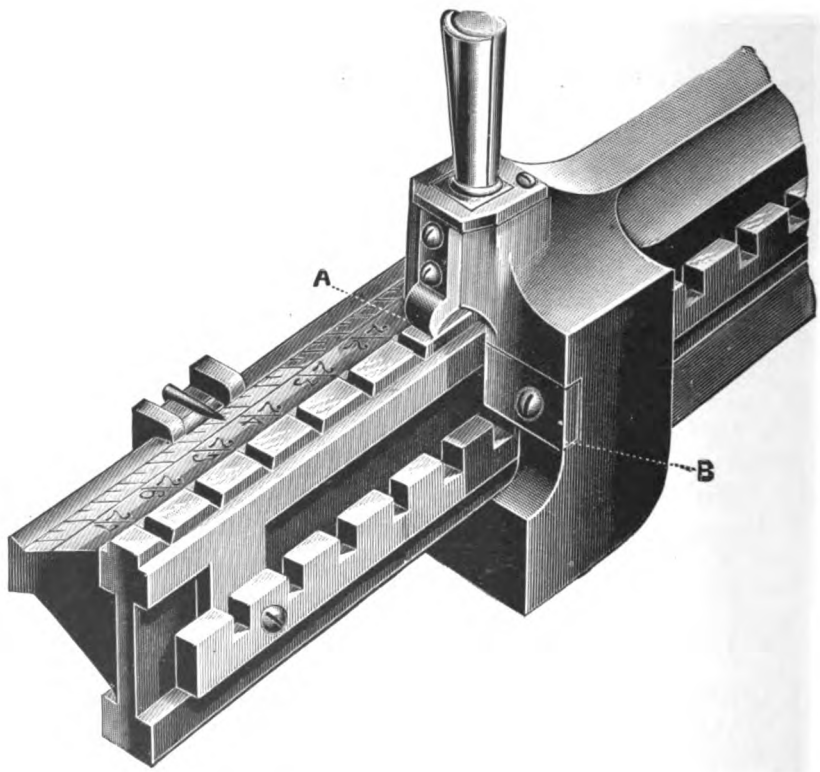

FIG. 947.—AVERY'S PATENT STEEL NOTCHED PROTECTION BAR.

As will be seen, this consists of two platforms, one 14 ft. by 6 ft. 2½ in., and the other 8 ft. by 6 ft. 2½ in., placed 27 ft. apart centre to centre. Each weighbridge is of the three-lever type, strongly made, and self-contained in a cast iron frame as previously described in connection with the 30-ton weighbridge. The 14 ft. weighbridge is always connected with the steelyard, and is used for weighing single trucks, while the 8 ft. weighbridge is disconnected except when necessary for

weighing long bogie large-capacity trucks. The levers are then thrown into gear with the steelyard by means of the handle on the pillar, as shown in fig. 948, so that the combined weight can be read on the steelyard.

The transfer levers are connected to a short balance of rocking beam, the outer end of which is coupled by a link to a whipple-tree lever, which is suspended by the rocking beam at one end and by the steelyard at the other. This whipple-tree lever is also attached to a holding-down link, these links being fitted with hardened steel verges, and the lever pin with knife edges. As the weight upon the platform depresses the transfer lever, it pulls down the inner end of the rocking beam, and raising the outer end lifts the inner end of the whipple-tree lever, and by means of the inverted pivot depresses the outer end, and so raises the steelyard. The method of connecting and disconnecting the small weighbridge is shown in the small sketch. The end of the whipple-tree lever is formed like a double eye, with a long pin or gudgeon passing through. The main connecting rod to the steelyard passes between the double eye, whilst two lifting reins are connected to the outside, as shown. The slot in the middle or main connecting rod is large enough to allow the pin being lifted off its bearing by means of the lifting reins and handle on the pillar. At the same time as the handle connects or disconnects the small weighbridge, it also automatically lowers or raises a compensating weight for adjusting the varying load upon the connecting rod.

By means of this weighing machine trains of mixed trucks can be weighed without uncoupling the small trucks being weighed on the 14 ft. weighbridge, and the long bogie wagons on the two combined. With a long weighbridge the smaller trucks would have to be uncoupled, as otherwise part of the next truck would be on the weighbridge, making it impossible to weigh and causing serious inconvenience and waste of time.

It is usual with tub-weighing machines to stop each tub on the table, and figs. 951 and 952 show two methods of doing this automatically. In fig. 951 a flat bar, shaped as shown, is suspended from a bracket at one end, immediately over the tubs, so that as the tub runs below it raises the "stopper" to clear the tub standing on the machine table, which runs off, and the following tub is caught by the "stopper" and stopped in turn. A light rod passing through the floor above, with a collar, prevents the "stopper" from resting upon the tub.

In fig. 952 an arrangement of levers and bell cranks worked by the axles of the tub, depress a "stopper" against which the axle of the tub on the weighing table rests, which, on being released, runs off, and the releasing tub following is stopped in turn. Another arrangement, designed by Professor Galloway, is a mechanical one, and consists of a cylinder with a piston worked by steam or compressed air, which acting upon the axle of the tub pushes it off, and at the same

time may be made to impart sufficient impetus to the tub so as to carry it some distance on its way to the tippler. None of these appliances, however, can be compared to the really simple method, the credit for which is due to Messrs. Campbell, Binnie, and Co., of arranging the weighing machine with a longer table than is usual and creeping the tub over it.

As the trucks are being filled at the end of the screens, it is necessary to move the truck into a new position as it gradually fills. Usually this is done by an attendant, who knocks out and replaces a wood chock similar to that shown in fig. 953, or by means of the brake. As a rule, however, the latter method is not so reliable or so quick as the chocks, and these are best made from "beech" wood, and shaped as shown.

Fig. 951. Fig. 952.

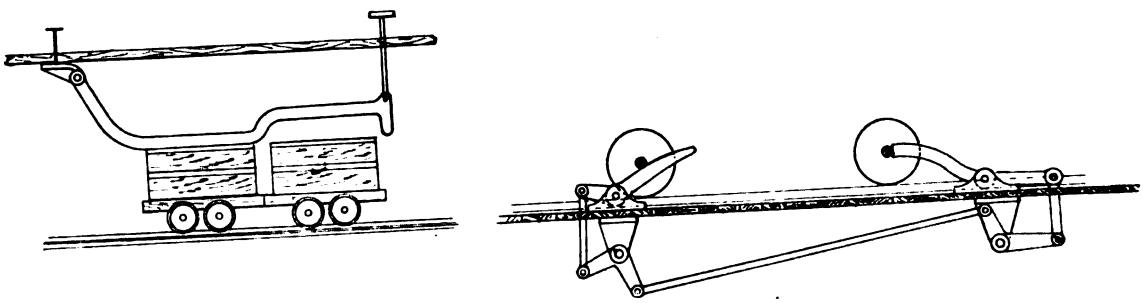

Fig. 951 and 952.—Tub Stoppers.

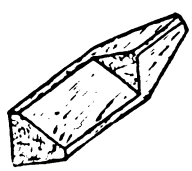

Fig. 953.—Wood Chock.

Messrs. Miller and Yates, however, have invented an appliance, which is manufactured by Messrs. Campbell, Binnie, and Co., to enable the truck as it is being filled to be controlled from the screen-shed floor. This is shown in figs. 954 and 955, and, as will be seen, consists of a series of horns A secured to a pair of angle bars, which catch the axles of the wagons. One end of the catch bar is articulated to a brake beam, consisting of a piece of oak, between two iron plates, which are extended and secured to a pair of brackets bolted to the two pitch-pine beams, carrying the apparatus, and which are secured to the railway sleepers, between the rails. The stopper and brake beams are raised by means of the two

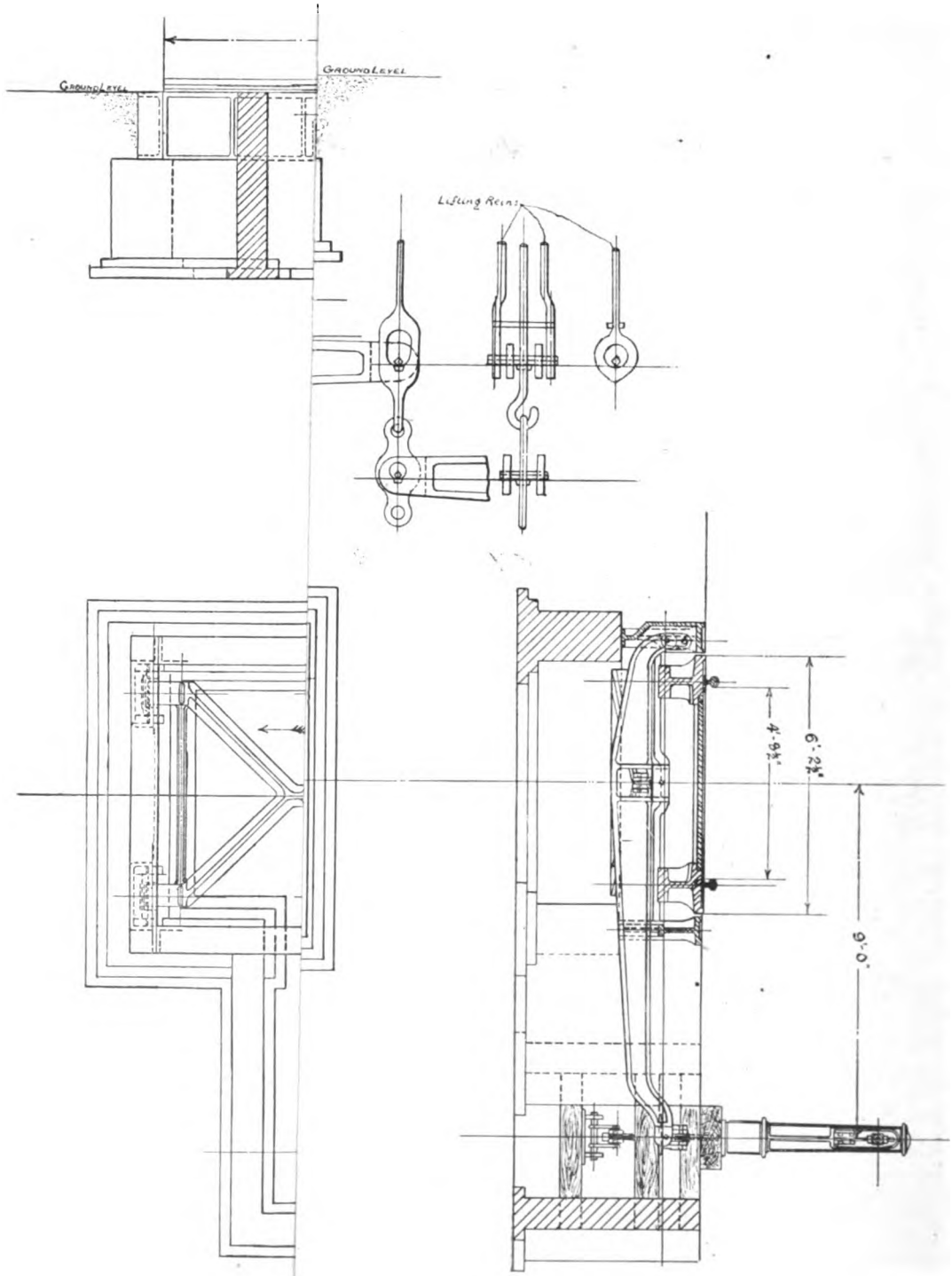

FIG. 950.

Fig. 954.

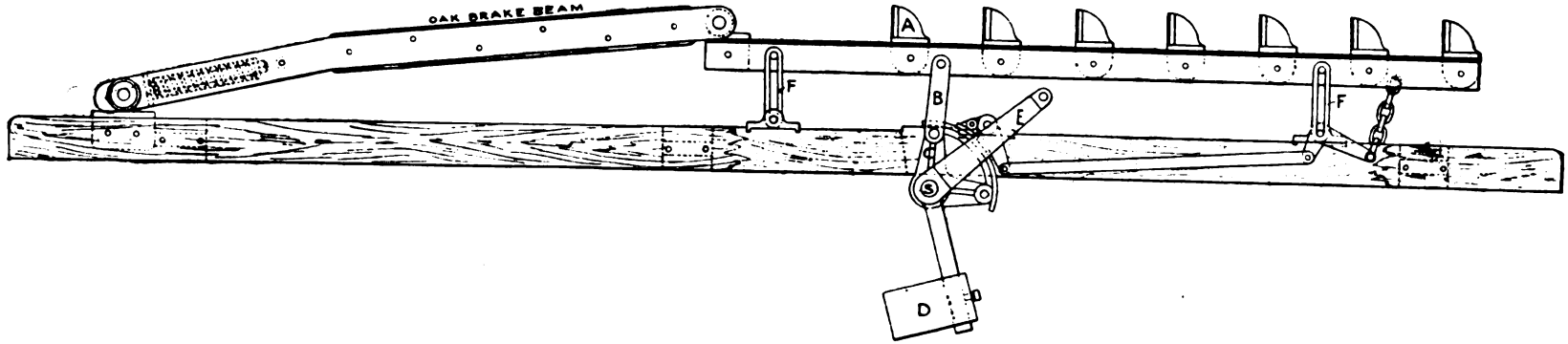

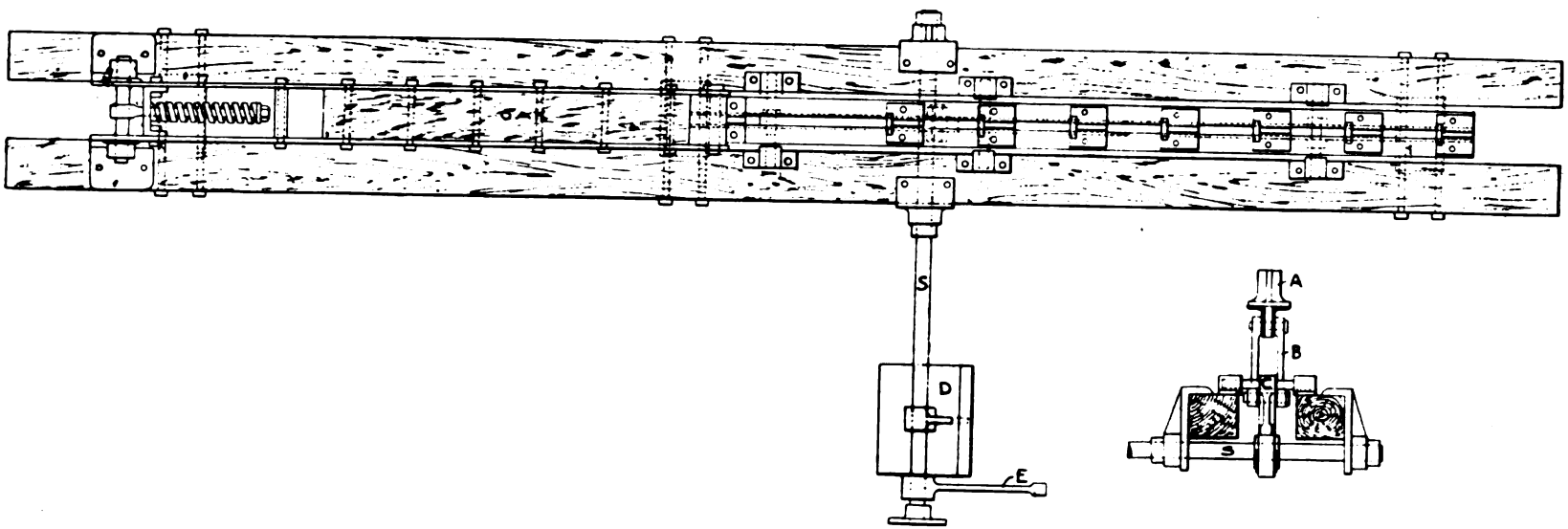

Fig. 955.

Figs. 954 and 955.—Miller and Yates' Patent Wagon Controller.

FIG. 956.

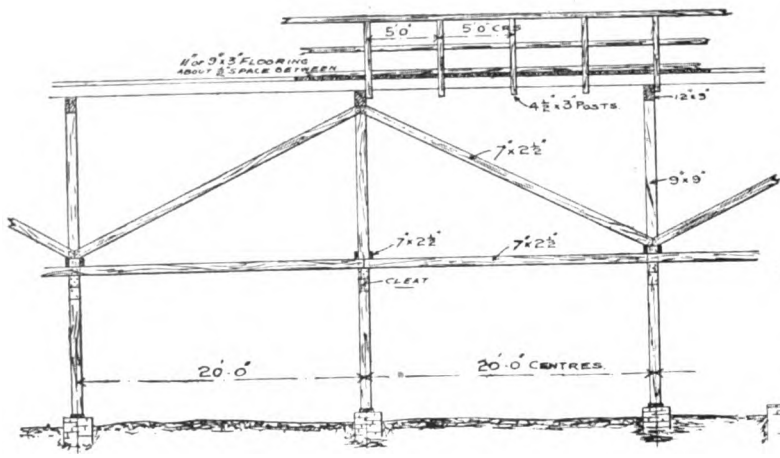

FIG. 957.

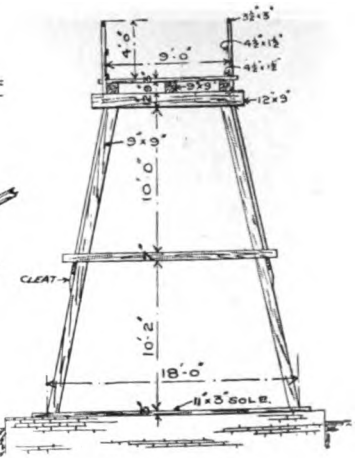

FIGS. 956 AND 957.—WOOD GANTRY.

FIG. 958.

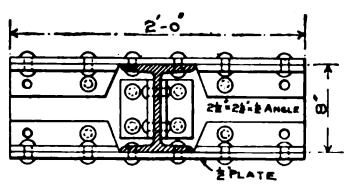

FIG. 959.

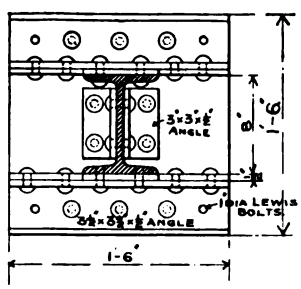

FIG. 960.

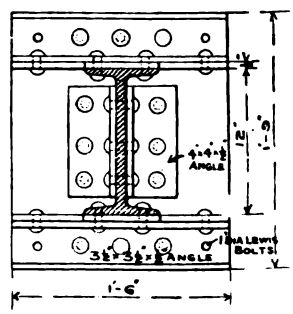

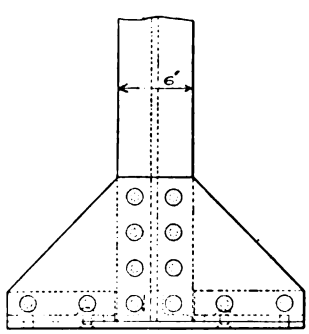

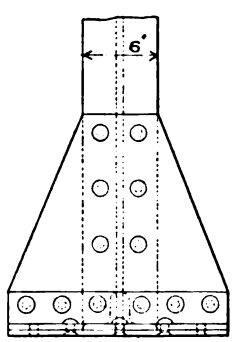

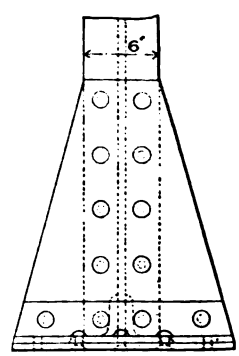

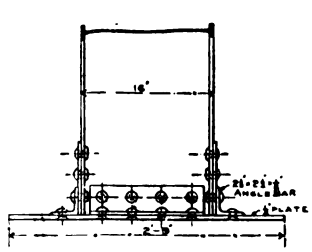

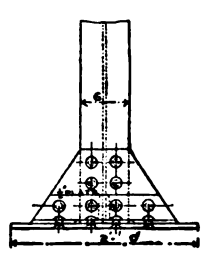

FIG. 961.

FIGS. 958, 959, 960, AND 961.—FEET OF STANCHEONS.

links B, which are operated through the quadrant C, fixed to the shaft S, and the lever E, the latter being connected by levers to a controlling handle fixed in any convenient position, the whole being balanced by the balance weights D. As shown, the apparatus is in position for receiving a truck, which, in case it is coming too fast, is caught by the axles on the brake beam, and owing to the outer link F, as the beam cannot be depressed, the wagon tends to push forward the apparatus, which it may do, to the extent allowed by the slotted holes in the end of the side plates of the brake beam. This movement, however, is also controlled to some extent by the spiral spring shown between the plates. After the wagon is stopped the apparatus is lowered, and the wagon allowed to move forward to the first stop A, and so on as the truck gradually fills, until it is finally released, and allowed to run to the weighing machine. Ordinarily the apparatus is kept in the raised position by the balance weight D, and in order to prevent any chance of the apparatus being suddenly lowered, when any weight is upon the brake beam, the quadrant C is provided with a brake rim, upon which a brake block is pressed by means of the levers and chain as shown, and of course the greater the weight the more will be the resistance of the quadrant brake. The apparatus is simple, and strongly constructed, most effective in its operation, and the cost of its installation would be capital extremely well invested.

Gangways, or gantries, as they are variously termed, may be constructed of wood, or wood runners on brick pillars, or, what is much better, of cast iron or steel columns, and H- or ⊏-section girders, the floor being of wood. Figs. 956 and 957 show a gangway of wood, which is cheap to construct, and if built of pitch-pine timber, taking care to carefully paint all morticed and tenoned joints, which should be carefully and tightly fitted together, will have a very long life, if painted every few years, or what is still better, if made of "creosoted" pitch-pine. The flooring deals should not butt close together, but be kept at least a quarter of an inch apart, otherwise the edges soon rot. The sole plates are of 3 in. thick creosoted timber, and rest on brick or concrete pillars. The design and dimensions of the scantlings depend, of course, upon the weight the gangway is to carry, the one shown being designed for carrying a slowly-moving loaded tub weighing about 1 ton. With heavier tubs, the centres of the supports should not be so great.

In the construction of superstructures cast iron columns have given place to H section steel stanchions. These at the base may be fitted into cast iron shoes, which are bolted to the foundation, or they may be riveted to a flat plate by means of angle bars, and side stiffening plates similar to the examples shown in figs. 958 to 961. In arranging stanchions care should be taken to place the long axis of the section in the direction of greatest stress, which may be due to either machinery or wind pressure. In a high building the latter may be very great, and, while the

arrangement of the machinery may suggest the opposite, a little consideration may prove that the long axis should be set to resist the wind pressure. In any case it is usually necessary to stiffen the stanchions by diagonal braces, which variously consist of angle, tee, or channel bars, the aim of the designer being to get the best and stiffest structure with the least weight of material. The cross girders are attached to the stanchions by angle brackets, which should be securely riveted to the stanchion before they leave the works, as they also form part of the bearing surface for the cross girder. In addition, struts of tee bars, or "gusset" plates, are often put in to stiffen the structure, as shown in figs. 962 and 963.

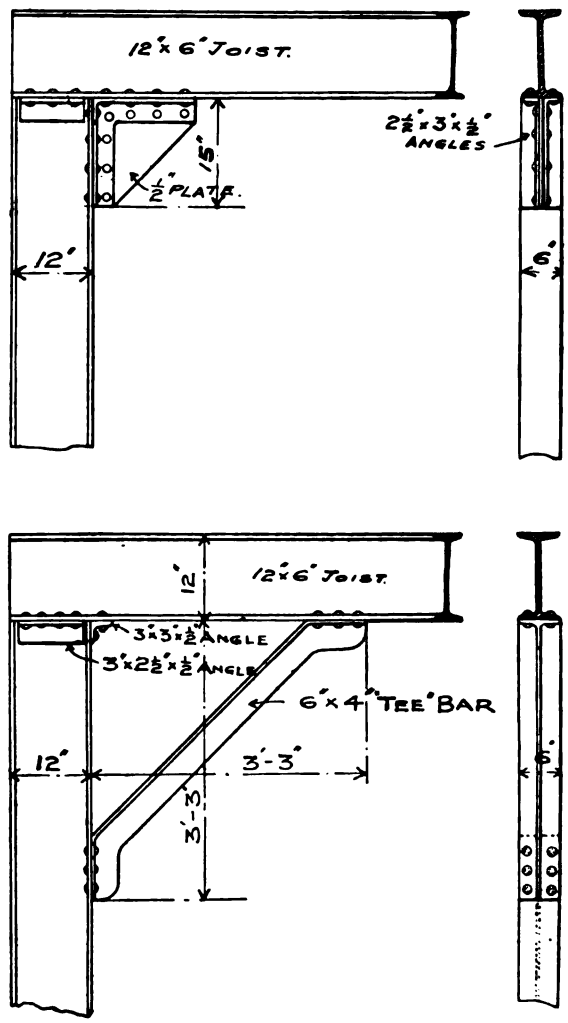

FIGS. 962 AND 963.

The question as to the strength of rolled-steel joists as stanchions is one about which there is considerable diversity of opinion. In heapstead structures, it is not so much the weight upon the columns that causes the difficulty, as the necessity to obtain sufficient "stiffness" to prevent the moving machinery vibrating the building. If the column were perfectly straight, and the load central with the axis, a steel stanchion would sustain an enormous weight, but such ideal conditions cannot be attained in practical working, as columns are seldom perfectly straight, nor can the load be applied exactly axial, and consequently it is necessary to design the column "stiff" enough to carry the given load, which is affected more by the length of the column than the weight to be carried.

Probably the most reliable formula which best agrees with practice is that by Professor T. Claxton Fidler, in his work *Bridge Construction*. Let

A = area in square inches of the section,
I = least moment of inertia,
K = radius of gyration,
R = resilient force of the section in pounds per square inch,
L = length of the column in inches,
f = ultimate stress in pounds per square inch,
P = load in pounds to produce f,
E = modulus of elasticity = 29,000,000 lb. for steel, 14,000,000 for cast iron,

Then
$$K = \sqrt{\frac{I}{A}} \text{ or } K^2 = \frac{I}{A} \tag{1}$$

and for columns with rounded ends,
$$R = E \times \pi^2 \times \frac{K^2}{L^2} \tag{2}$$

and
$$R = E \times \pi^2 \times \frac{K^2}{0{\cdot}6\,L^2} \tag{3}$$

for columns with fixed ends, and gives the maximum breaking weight for an "ideal" column, and it is necessary to reduce this to practical conditions, and to suit the value that may be assigned to f. For cast iron f may be taken as 70,000 lb.; for steel 60,000 lb. is a fair average, and for good pitch pine 6,000 lb. The practical breaking weight then
$$P = \frac{R + f - \sqrt{(R+f)^2 - 2{\cdot}4\,Rf}}{1{\cdot}2} \tag{4}$$

and
$$P \times A = W_B \tag{5}$$

the actual breaking weight of the column, and
$$\frac{P \times A}{F} = W_S = \text{the safe load.} \tag{6}$$

where F = the factor of safety.

F depends upon the conditions of the load and length of column. For short columns supporting dead loads W_S may be taken as $\frac{1}{4}$ W_B; but where the load is more or less a live load this varies between $\frac{1}{6}$ W_B to $\frac{1}{8}$ W_B. For long columns Mr. Shaler Smith adopts a sliding factor of safety which increases with the length of the column. In this case
$$F = 4 + 0{\cdot}05\,\frac{L}{D},$$

where D = least diameter or width of the column in inches.

Messrs. Redpath, Brown and Co. Limited adopt the following formula:—

$$\text{Breaking strength in tons} = \frac{17{\cdot}8 \times A}{1 \times \frac{L^2}{CK^2}} \qquad (7)$$

where
A = area in square inches,
L = length of column in inches,
K = radius of gyration,
C = a constant = 18,000 for rounded ends, 36,000 for fixed ends, and 27,000 for one end fixed and the other free.

They also adopt a sliding factor of safety of

$$F = 4 + 0{\cdot}07\,\frac{L}{D}.$$

As an example showing the application of the above formulæ, take the following case. It is desired to design the columns forming the gantry to carry a loaded truck weighing 15 tons. The columns will be 16 ft. 6 in. apart, and, say, 30 ft. high. The easiest way of dealing with the problem will be to fix upon a certain section, and test the strength by the foregoing formulæ. Take, for instance, an H-girder 15 in. by 6 in., weighing 59 lb. per foot, having a sectional area of 17·35 square inches and 30·76 least moments of inertia.

The load upon the girder will be—

Half weight of truck, 7 tons 10 cwt.
Cross girders, decking, &c., say, 10 cwt.

or a total load of 8 tons. By (1)

$$K^2 = \frac{30{\cdot}76}{17{\cdot}35} = 1{\cdot}83,$$

$$K = \sqrt{1{\cdot}83} = 1{\cdot}35,$$

and by (2) assuming both ends fixed,

$$R = 29{,}000{,}000 \times 3{\cdot}1416^2 \times \frac{1{\cdot}83}{(0{\cdot}6 \times 30 \times 12)^2} =$$

$$R = 29{,}000{,}000 \times 9{\cdot}8 \times \left(\frac{1{\cdot}35}{0{\cdot}6 \times 30 \times 12}\right)^2 = 11{,}368 \text{ lb. per square inch,}$$

and $\frac{11{,}368 \times 17{\cdot}35}{2{,}240} = 88$ tons as the crippling stress of a perfect column.

By (4) allowing f as 60,000 lb.,

$$P = 60{,}000 + 11{,}368 - \frac{\sqrt{(60{,}000 + 11{,}368)^2 - 2{\cdot}4 \times 60{,}000 \times 11{,}368}}{1{\cdot}2} = 10{,}481 \text{ lb. per sq. in.,}$$

and

$$W_B = \frac{10{,}481 \times 17{\cdot}35}{2{,}240} = 81 \text{ tons}$$

as the practical breaking weight.

The factor of safety will be

$$F = 4 + 0{\cdot}05\,\frac{30 \times 12}{6} = 7,$$

and $\frac{81}{7} = 11{\cdot}5$ tons as the safe load, which is capable of carrying about $3\frac{1}{2}$ tons more than is required. The section is therefore amply strong for the purpose, and it becomes a question of trying a different section or a girder of the same dimensions, but lighter in weight and consequently less in sectional area. Probably a 14 in. by 6 in., weighing 57 lb. per foot, with a sectional area of 16·17 square inches and 30·73 least moments of inertia would just about meet the case.

Messrs. Redpath, Brown and Co.'s formulæ in this case give

$$W_B = \frac{17{\cdot}8 \times 17{\cdot}35}{1 + \frac{(30 \times 12)^2}{36{,}000 \times 1{\cdot}83}} = 104 \text{ tons},$$

and

$$W_S = \frac{104}{4 + 0{\cdot}07 \times \frac{30 \times 12}{6}} = 12{\cdot}7 \text{ tons},$$

there being a difference in favour of the latter formula of about 11 per cent. To be on the right side, and to keep the working load the same, this formula—which has the advantage of being somewhat easier calculated—may be written

$$W_B = 0{\cdot}9\,\frac{17{\cdot}8\,A}{1 + \frac{L^2}{C\,K^2}} \qquad (8)$$

keeping the same sliding factor of safety.

In the example

$$W_B = \frac{16 \times 17{\cdot}35}{1 + \frac{(12 \times 30)^2}{36{,}000 \times 1{\cdot}83}} = 93{\cdot}4 \text{ tons},$$

and

$$W_S = \frac{93{\cdot}4}{8{\cdot}2} = 11{\cdot}4 \text{ tons},$$

which practically agrees with the first result.

Where stanchions have to be strongly braced together, the best method is to use channel section bars, the ends being bevilled to suit the angle of the diagonal, and firmly riveted to the stanchion by angle cleats, also bevilled to suit; in other cases, angle or tee bars are used.

Probably most of the steel structural work used in heapsteads is designed in a more or less haphazard fashion, the joists being merely selected from makers' catalogues, who usually give more or less full particulars as to the weight the joists will carry. This is scarcely the way to get the very best results, keeping in view the desirability of obtaining the best and stiffest structure with the least weight of material, and too often this is neglected. Nothing conduces so much to the efficient

working of screening machinery as a well-designed superstructure; and it would certainly pay over and over again to give attention to this matter, and pay a little extra for the plant. It is not sufficient to depend upon makers' catalogues, as the strengths given are usually the maximum, and in many cases are absolutely unreliable.

The only correct method of designing a girder to support a given weight is by considering the moment of inertia and modulus of the section. In the following formula let

W = the weight to be carried in pounds, including the weight of the girder itself,
A = area of the section in square inches,
L = length of the span in inches,
E = modulus of elasticity, 29,000,000 for steel, 26,000,000 for wrought iron,
Z = modulus of section,
I = moment of inertia,
y = distance from neutral axis to the top or bottom of section in inches,
F = factor of safety,
f = modulus of rupture, 70,000 for steel,
C = constant, depending upon manner of loading,
D = deflection of girder under full load,
K = radius of gyration,

Then

$$Z = \frac{I}{y} \tag{1}$$

$$I = A K^2 \tag{2}$$

The values of I, A, and K^2 are given in Table A, page 117, for the different sections commonly employed.

y = half depth of beam.

$$\text{The bending moment } M = \frac{W L}{C} = Zf \tag{3}$$

C = 1 (*a*). For a beam fixed at one end and loaded at the other.
2 (*b*). For a beam fixed at one end, the load evenly distributed.
4 (*c*). For a beam supported at both ends but loaded in the centre.
8 (*d*). For a beam supported at both ends, the load evenly distributed.
8 (*e*). For a beam loaded in the centre, both ends being securely fixed.
12 (*f*). For a beam conveying an evenly distributed load, both ends securely fixed.

The breaking weight W_B

$$W_B = f Z \frac{C}{L}. \tag{4}$$

$$Z = \frac{W_B \times L}{f C}. \tag{5}$$

and the safe working load W_s,

$$W_s = f\frac{ZC}{FL}. \tag{6}$$

$$Z = \frac{W_s \times L \times F}{fC}. \tag{7}$$

F depends upon the nature of the load, and may be taken as one-third to one-fourth for dead loads such as carrying walls, &c., one-fifth for more or less varying loads, such as floors, &c., and one-sixth for live loads such as vibrating machinery.

The deflection of the beams depends upon the proportion of the depth to the span, which varies from one-twelfth to one-twentieth of the span, the latter being the maximum allowable. A very good proportion is one fourteenth to one-fifteenth.

$$\text{D for } (a) = \frac{WL^3}{3EI}.$$

$$\text{D for } (b) = \frac{WL^3}{8EI}.$$

$$\text{D for } (c) = \frac{WL^3}{48EI}.$$

$$\text{D for } (d) = \frac{5WL^3}{384EI}.$$

$$\text{D for } (e) = \frac{WL^3}{192EI}.$$

$$\text{D for } (f) = \frac{WL^3}{384EI}.$$

As an example:—Find the dimensions of a girder suitable for carrying a live load of 10 tons, which is to include the weight of the beam, the clear span being 16 ft., and supported at both ends.

In this case, assume a depth of girder as one-twelfth the span, so that $\frac{16 \times 12}{12} = 16$, which gives one dimension of the required girder. Allowing a factor of safety of 6, then by (7)

$$Z = \frac{10 \times 2{,}240 \times 6 \times 12 \times 6}{70{,}000 \times 4} = 92{\cdot}16$$

and $$I = 92{\cdot}16 \times 8 \text{ (half depth of beam)} = 737{\cdot}28,$$

which may be referred to a maker's catalogue, for the nearest section. In Messrs. Redpath, Brown and Co.'s catalogue, a 16 in. by 6 in. joist, weighing 62 lb. per foot, the greatest moment of inertia "I" is given as 722·36, which may be considered near enough for practical purposes, the difference amounting to within 2 per cent.

Taking the weight as 62 lb. and the length as 16 ft., gives 992 lb.—or, say, 9 cwt.—leaving 9 tons 11 cwt. as the working load. Testing for deflection,

$$D = \frac{10 \times 2{,}240 \times (12 \times 16)^3}{48 \times 29{,}000{,}000 \times 725{\cdot}95} = 0{\cdot}15 \text{ in.}$$

which is within the allowable deflection of 1-480th of the span, which in this case would be

$$\frac{16 \times 12}{480} = 0{\cdot}4 \text{ in.}$$

In many cases the amount of deflection is the determining factor in the design of a beam.

Probably the earliest known method of separating minerals by mechanical means was by washing, and for separating heavy minerals from the lighter matrix, is the only means used. As is well known, its action depends upon the difference in the specific gravities of the material being washed, the heavier material falling or sinking to the bottom of the washing machine, while the lighter material is washed away with the stream of water. In metalliferous washing machines the heavier product is the valuable one, whilst in coal-washing machines the valuable product is the lighter material, but in both the principle of washing is the same.

The object of washing coal is to remove the stones and dirt, or incombustible matter, to reduce the quantity of ash in the marketable product. Large pieces of coal, as has been shown, are satisfactorily cleaned by hand-picking on moving belts or tables, as owing to their size and smallness in quantity they are quickly seen and readily removed. With the small coal, however, this cannot be done, as the coal is not so evenly spread over the picking table, and the pieces of dirt are very small and numerous, and as a consequence they cannot be hand-picked efficiently, and it is safe to say that to clean coal under 3 in. diameter cubes, the most efficient way is by washing.

Coal-washing machinery within recent years has very largely developed, and inventors are still working on the subject, chiefly with the object of reducing the cost of the plant, as with properly designed and installed machinery the efficiency cannot well be improved, though such a plant may be very costly, and in order to reduce this cost many different ideas and systems have been put forward, more or less ingenious ; but in most cases efficiency in washing has always been sacrificed to obtain cheapness of the plant, and at the present time, if a really efficient washing plant is wanted, it has got to be paid for.

The earliest known type of washing machine was the " trough " washer, now fast disappearing, if any are still in existence. This consisted of a long trough, with low divisions or partitions placed at intervals along its length. At the outer end was a screen with finely-divided gauze, and a water-tight hopper, into which the water drained, and from which it flowed away or was led to the suction end of a pump and used over again. The coal and dirt were delivered at the upper end of the trough by a current of water, and as it flowed along, the heavier pieces of dirt sank to the bottom of the water and were intercepted by the small

divisions, against which they rested, until removed with a scoop at the end of a wooden handle by an attendant; whilst the lighter particles of coal were washed along with the stream, and over the screen, where the water was drained off, into a wagon or hopper arranged to receive it. Where great efficiency was required a pair of troughs would be used, which were operated alternately by an intelligent attendant, who at the right moment diverted the stream of coal and water from one trough to the other, so that the stones and dirt could be removed from one trough while the coal was passing over the other. Needless to say, a great deal depended upon the attendant, and, at the best, the efficiency of separation was always comparatively low.

Attempts have been made to improve this washer, the best known being the "Elliott" washer, made by Messrs. the Hardy Patent Pick Company Limited. This consists of cast iron or other metal troughs, about 18 in. wide, having sloping sides, being widest at the top. In this trough are low close-fitting scrapers attached to a chain, which slowly moves them forward in a direction against the stream of coal and water. The action is the same as in the old trough washer, the heavier particles of *débris* being caught by the scrapers and conveyed to the upper end of the trough, where they are discharged.

Figs. 964, 965, and 966 show an Elliott coal-washing plant for dealing with 300 to 400 tons of coal per day of nine hours. The coal is delivered to the washer as it comes from the pit, and in consequence has to be broken into a suitable size to be washed. For this purpose a "cracker" or breaker is fixed in the receiving hopper or pit, through which the coal has to pass before reaching the elevator. It is then elevated and discharged on to a swinging conveyor of the Zimmer type, which separates all the fine coal or duff below $\frac{1}{4}$ in or $\frac{3}{16}$ in., which is delivered unwashed to a band conveyor, to be taken away as desired. The coal above this size which passes over the screen is deposited on to another swinging screen, which classifies it into two sizes before delivering it into the washing troughs. It will be noticed the coal is delivered at about the centre of the length of the troughs, while the water is received at the upper end, and the dirt carried by the scrapers is discharged beyond this point. The reason for this arrangement is to allow the clean water to further wash the stones removed from the coal in order to prevent particles of coal adhering to them, or to separate pieces of coal which may have been caught by the scrapers. After being washed, the coal and water are discharged on to two swinging conveyors fitted with finely-perforated zinc or copper plates, which drain out the water and deliver the coal by means of a shoot into a "Devil" disintegrator, where it is ground up to a suitable size for coking. The water is collected in a tank and flows back to the centrifugal pump to be used over again. After being crushed, the coal is delivered to an elevator, which raises it to a

FIG. 964.—SECTIONAL ELEVATION.

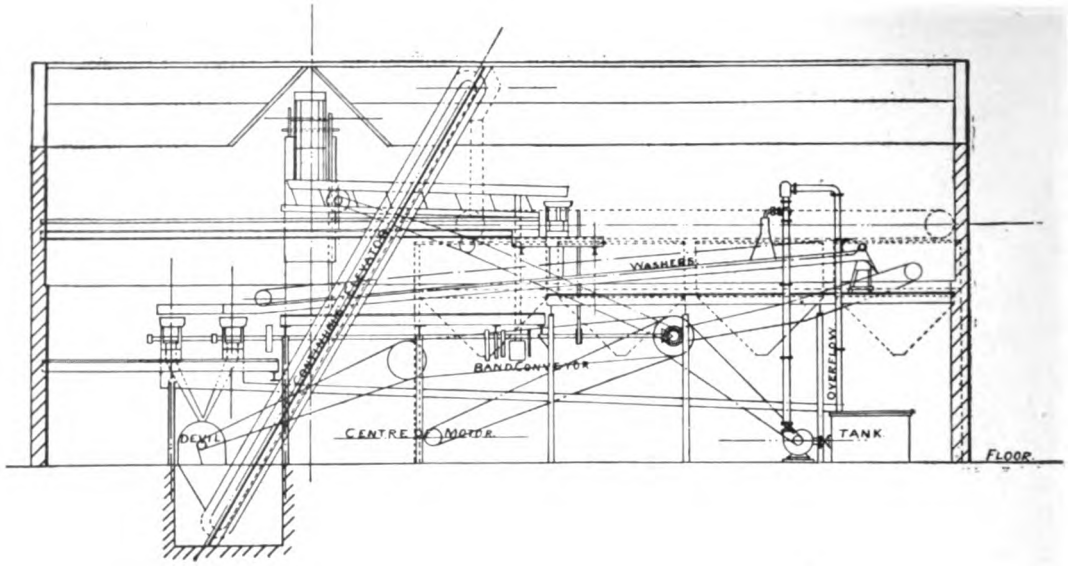

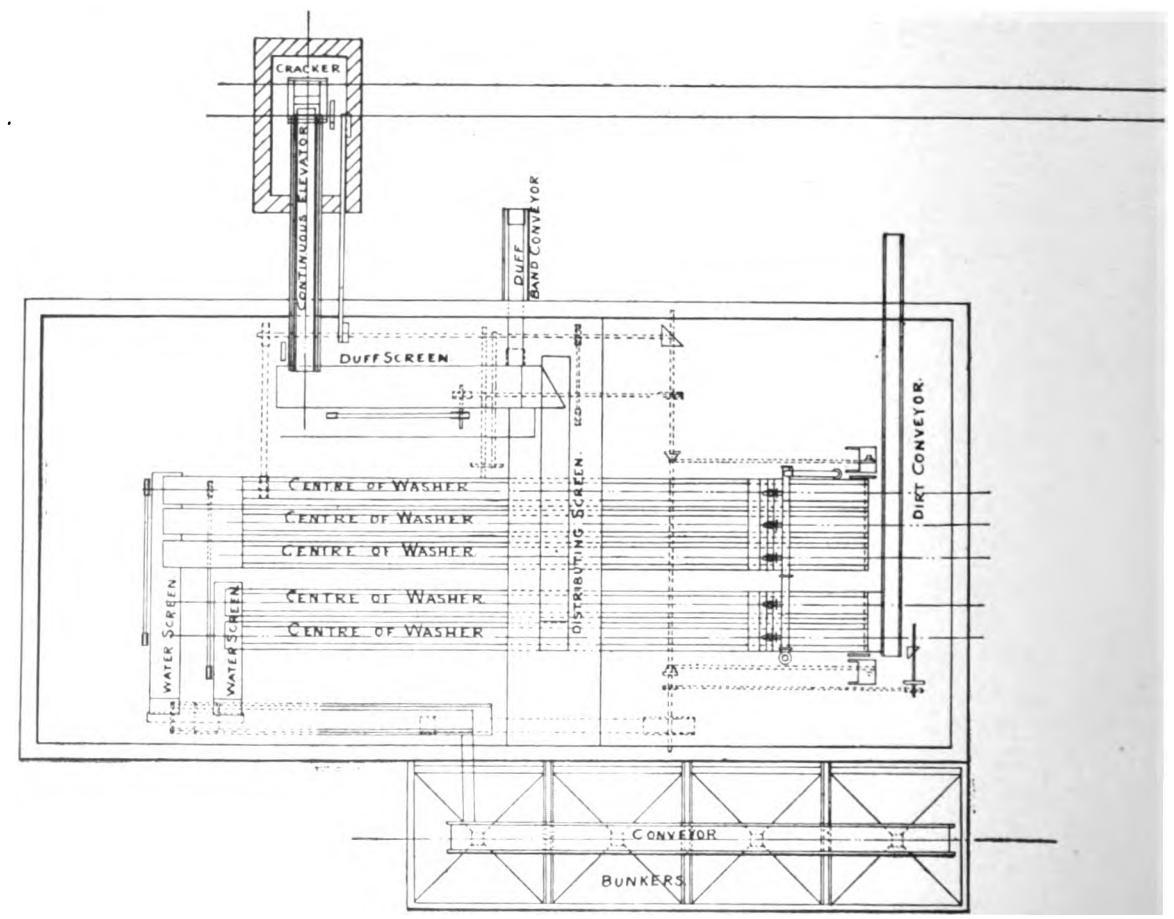

FIG. 965.—PLAN.

FIGS. 964 AND 965.—ELLIOTT COAL WASHER.

scraper conveyor at the top of the coal bunker or hopper shown on the left of fig. 966, from whence it is taken by wagons to the coke ovens. The dirt from the washers is delivered on to a scraper conveyor, and conveyed to a suitable position to be delivered on to the dirt heap or into wagons.

A larger plant is shown in figs. 967, 968 and 969 (Plate LXXXIII.) Here only small coal is delivered to the washer, which is elevated and delivered to "Vibromotor" type screens, where it is sized and passed on to the washers. After being washed the coal is delivered to another "Vibromotor," where the water is drained off and the coal discharged into a spiral conveyor, which conveys it along the end and practically the full length of the building on the sides, as shown, where it is finally discharged into a disintegrator to be crushed before being elevated to the storage

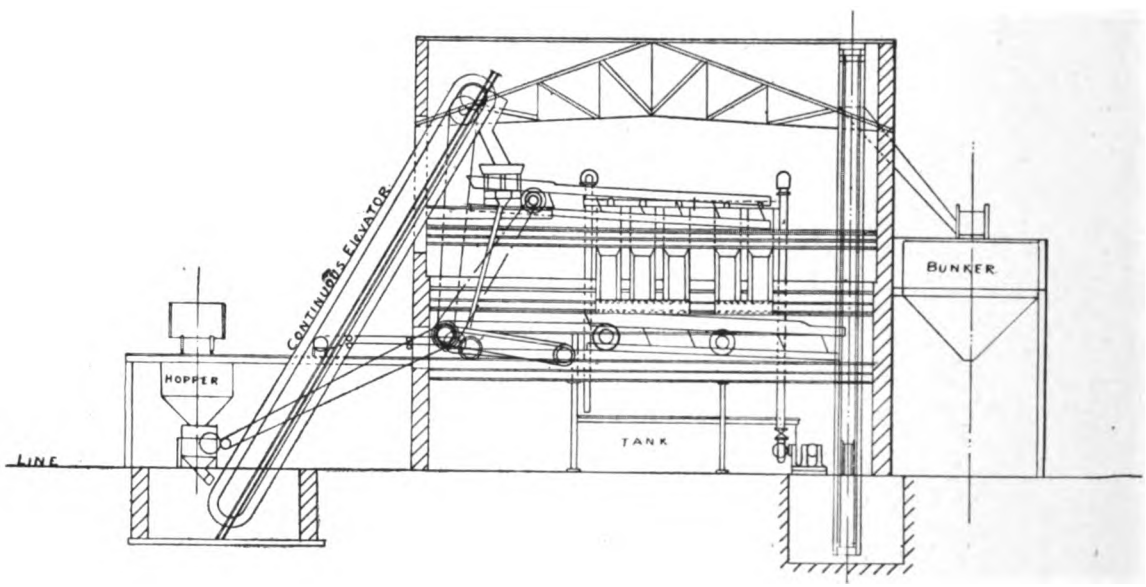

FIG. 966.—ELLIOTT COAL WASHER.—CROSS SECTION.

bunker. The water and any small coal is drained into a well, at the bottom of which is a spiral conveyor. The coal gradually settles in the well, and is caught and discharged by the conveyor, to an elevator which raises it and discharges it into the main conveyors delivering the coal to the disintegrator. The water rising in the well overflows into a channel and runs back to the pump. The dirt is discharged to a spiral conveyor, and delivered into a dirt wagon for removal. The washed crushed coal is delivered by the elevator to a push-plate conveyor, 24 in. wide, which distributes the coal in the storage bunkers, which are constructed from

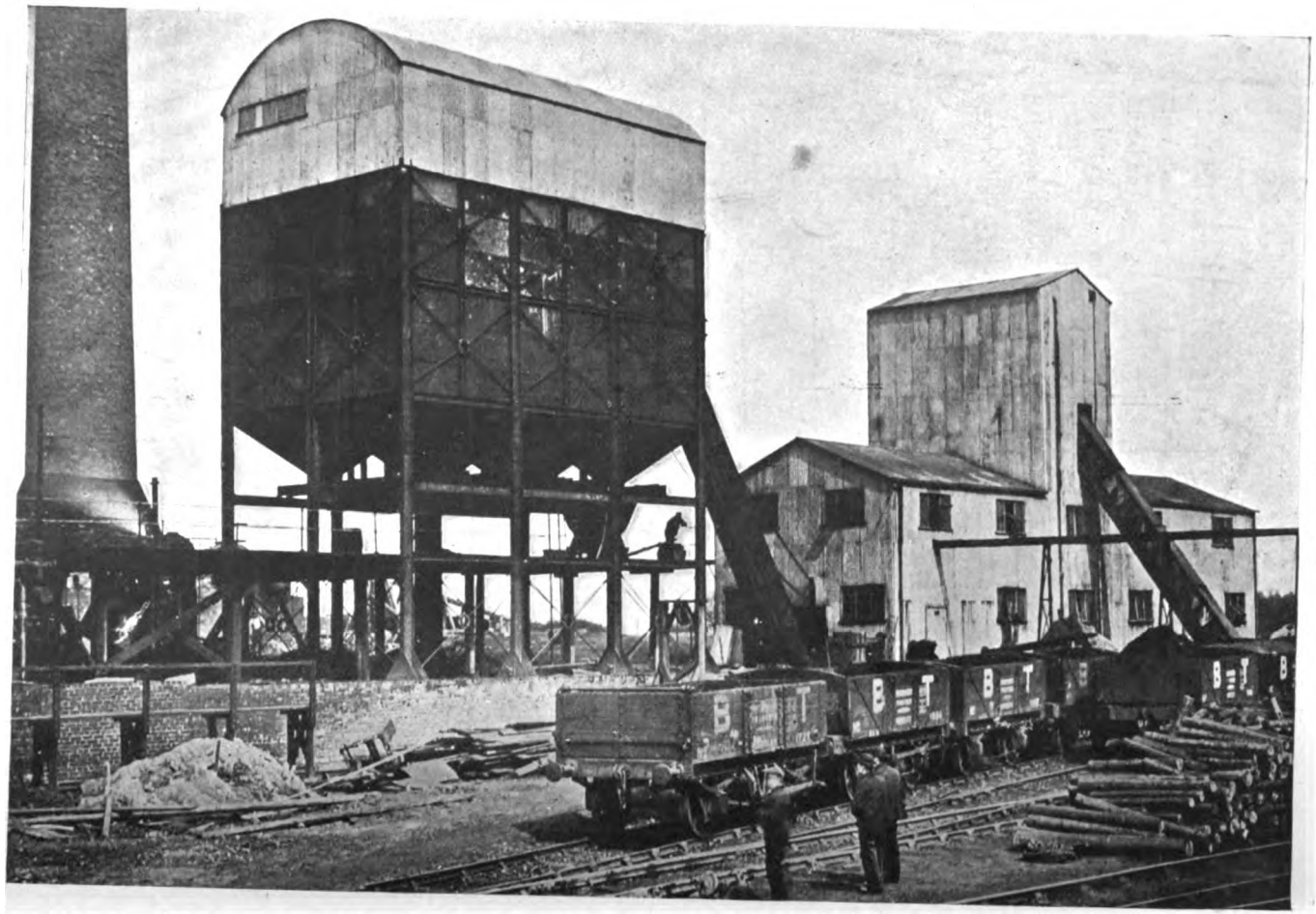

FIG. 970.—COAL ELEVATING, SCREENING, WASHING, GRINDING AND STORAGE PLANT ERECTED BY HARDY PATENT PICK COMPANY LIMITED.

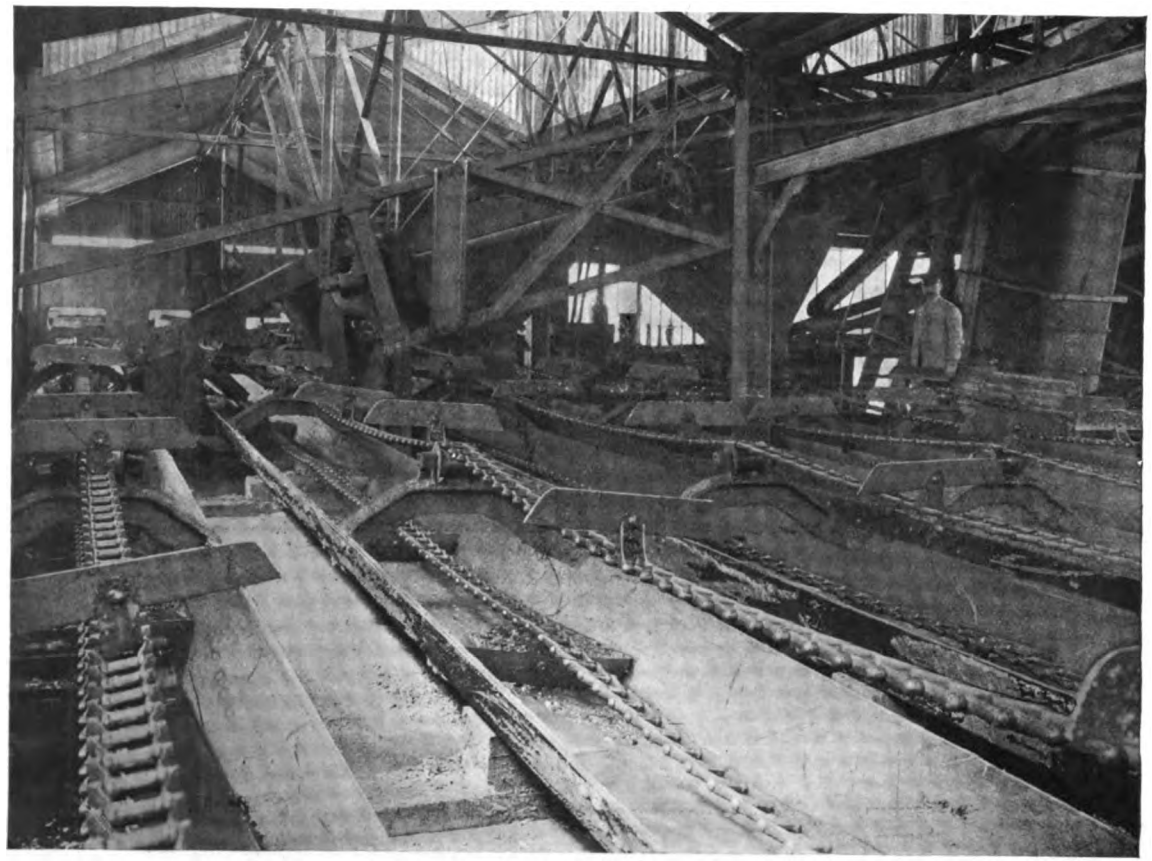

FIG. 971.—INTERIOR VIEW ELLIOTT COAL WASHERY.

steel channel bars and plates, and has a holding capacity of 900 tons. The bottom of the bunker is divided into twelve discharging hoppers, fitted with slides for convenience in loading the coke oven wagons. A general view of the plant is shown in fig. 970, while fig. 971 shows an interior view of an Elliott washer, showing the washing troughs and scrapers. The efficiency of this machine depends upon a careful proportioning of the speed and height of the scrapers to the size of coal being dealt with, as well as the inclination of the trough, quantity and velocity of the water.

The "Scaife" trough washer—an American machine—consists of a semi-circular trough about 2 ft. in diameter and 24 ft. in length, hinged along one side to a strong frame, so as to allow it to fall from a horizontal to a vertical position, by means of an arrangement of chains and balance weights. The trough is fitted with fixed divisions in a similar manner to the old trough washer. Along the centre of the trough is a shaft fitted with stirrers or agitators, reaching nearly to the bottom of the trough, and which, by means of a crank shaft, receive a reciprocating motion. The mixed coal and water are delivered to the upper end of the trough, and flow down, the stones and dirt being caught by the stops, while the clean coal is washed over the top, the action of the agitators assisting to prevent coal being lodged amongst the dirt. At stated intervals the attendant shuts off the supply of coal, and by moving a lever allows the trough to drop from its horizontal position, thus discharging the dirt.

Messrs. Qualter, Hall and Co. manufacture a washing machine consisting of an oscillating semi-circular trough supported at the ends, about 30 ft. in length by 2 ft. 6 in. in diameter, made of mild steel plates about $\frac{3}{8}$ in. thick. Inside the trough a screw conveyor revolves continuously. The coal and water are fed into the trough, and the combined action of the oscillating trough and screw stir up the mixture, the coal being washed over the top of the spiral, while the heavier dirt is caught by it and carried to the top end against the flow of water, where it is discharged into a hopper. Such a machine is capable of dealing with 15 tons of nut coal below 1 in. diameter cubes an hour.

A somewhat similar type of machine is the Blackett washer. In this case the machine consists of a steel plate tube as shown in fig. 972, fitted with a continuous spiral. The tube is fitted with roller rings, which rest on four rollers fixed in a frame on the floor of the washer house. Two of these rollers on one side are driven by means of a shaft, which cause the tube to revolve. The whole arrangement is inclined at a suitable angle, and the unwashed coal is delivered by means of a shoot at the upper end of the tube. Below the shoot is a water pipe which washes the coal into the tube, and below this again is another pipe, which gives a further supply of water. The *débris* is caught by the spiral and carried up the incline

PLATE LXXXIII.—(*To face page 452*).

IG. 969.

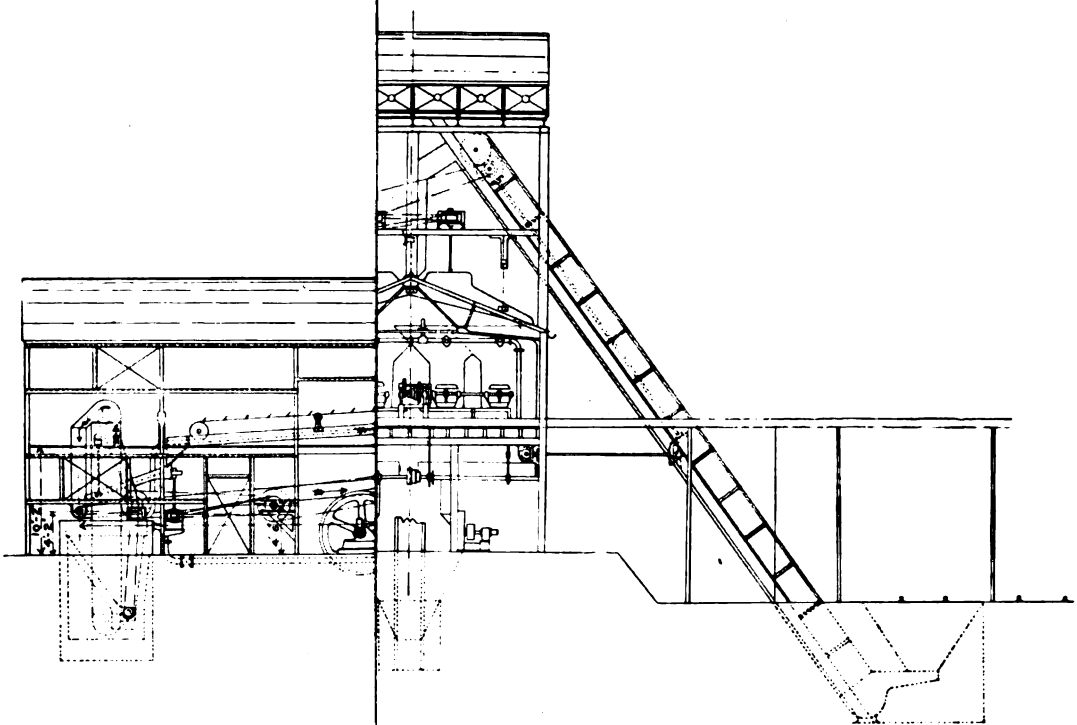

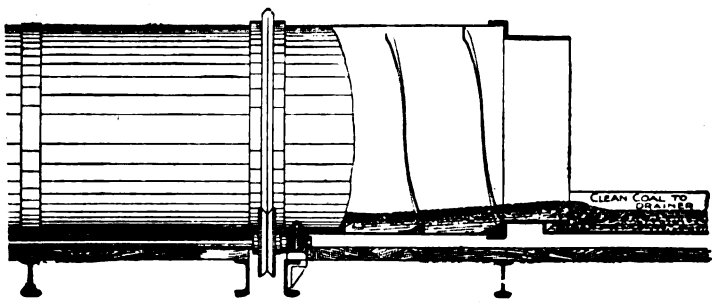
CLEAN COAL TO DRAINER

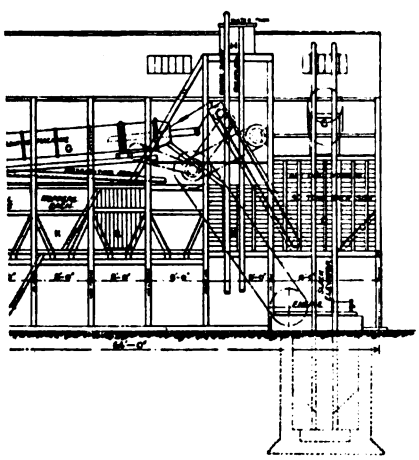

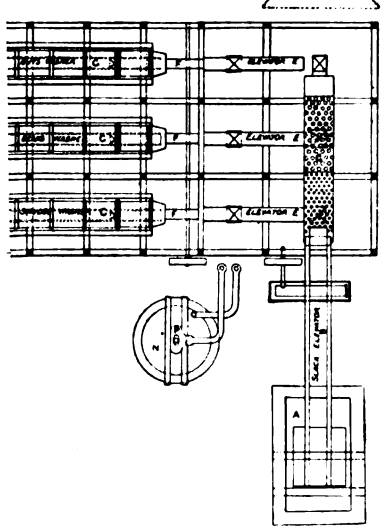

against the stream of water, and is discharged by a shoot, either into wagons or a dirt conveyor. Figs. 973, 974 and 975 show the arrangement of a washing plant, by Messrs. Mulholland, Maugham and Co., on this principle. The unwashed coal is delivered into the pit A, from which it is elevated by the elevator B to the revolving riddle C, where it is sized into nuts, beans and smudge. After being sized it is discharged into the hoppers D, from which it is elevated to the washing tubes G, by the elevators E and shoots F. The water from the tank H, at the top of the building, is delivered below the shoots and controlled by a stop-valve, flows through the tube together with the coal to the distributing spout, and thence to the various compartments of the drainage bunker K, which are fitted with doors for the discharge of the washed coal into wagons below. The dirt is carried by the internal screw against the flow of water to the top end of the tube, where it is discharged into the dirt hopper M. The sludge and water are conveyed by pipes to a settling pond (not shown on the drawing) where the velocity of the water is reduced so as to allow the small coal to settle, while the clean water overflowing runs to the well N, from which it is raised by the pulsometer pump P to the top tank H, to be used over again. The capacity of the plant is 450 tons of coal per day, and is driven by a 12 in. by 24 in. steam engine.

Burnett's patent coal washer, as made by Messrs. M. Coulson and Co. Limited, is shown in figs. 976 and 977. In this case the coal to be washed is raised to the delivery hopper B by the elevator A. From B the coal is distributed over the washing belt C by means of the spout D and a supply of water, which washes the coal down towards the elevator E. The water supply pipes F, fitted with regulating valves G and nozzles H, are connected to the supply tank I. One of the nozzles is placed just behind the feeding plate D of the hopper B, and the other some distance back beyond the feeding point, in order to wash off any coal that may be retained amongst the dirt. The washer consists of the belt C, which is an articulated endless trough, as shown in fig. 978, constructed of steel, about 60 ft. long, 3 ft. in width, 8 in. deep, and set at an inclination of about 1 in 18. The sections of the trough are about 3 ft. each in length, and at the joint are provided with a "dam" or "stop" (N) about 2 in. high, as shown. Practically, it is simply the old trough washer with a moving trough, as the dirt falls to the bottom of the trough, where it is arrested by the dams, and instead of being removed by hand, is moved and discharged automatically. The clean coal and water pass from the belt to the draining spout J, the water collecting in the well K, from whence it is pumped back to the cistern I to be used over again by the pump L. The washed coal passes on to the elevator E, where it is raised to the storage hoppers M and delivered into trucks or coke-oven tubs as desired. The dirt is discharged into the hopper, and then into the dirt wagons P for removal.

FIG. 976.

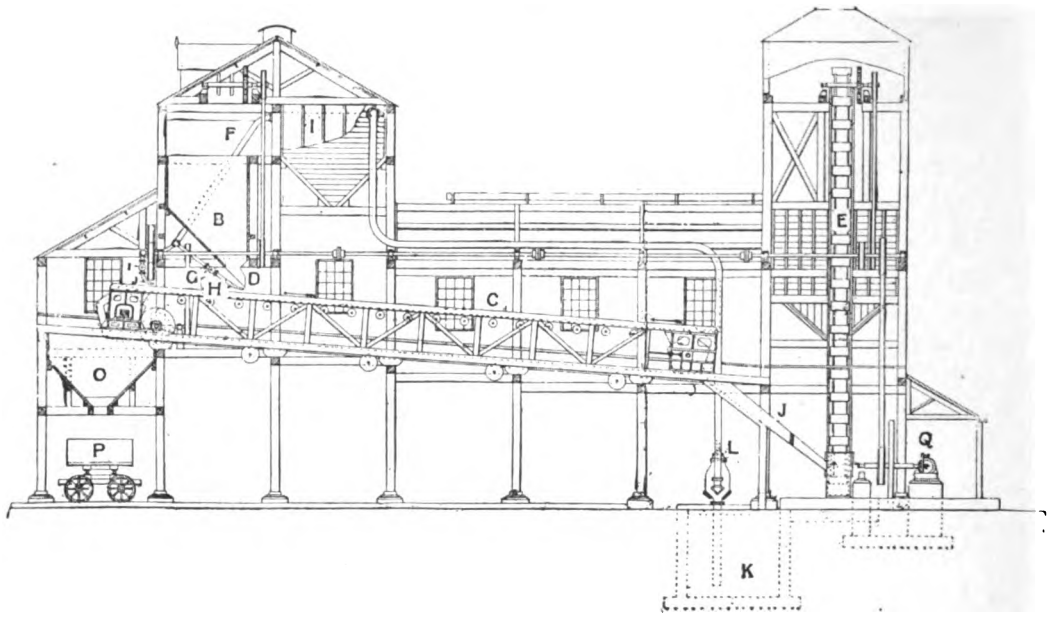

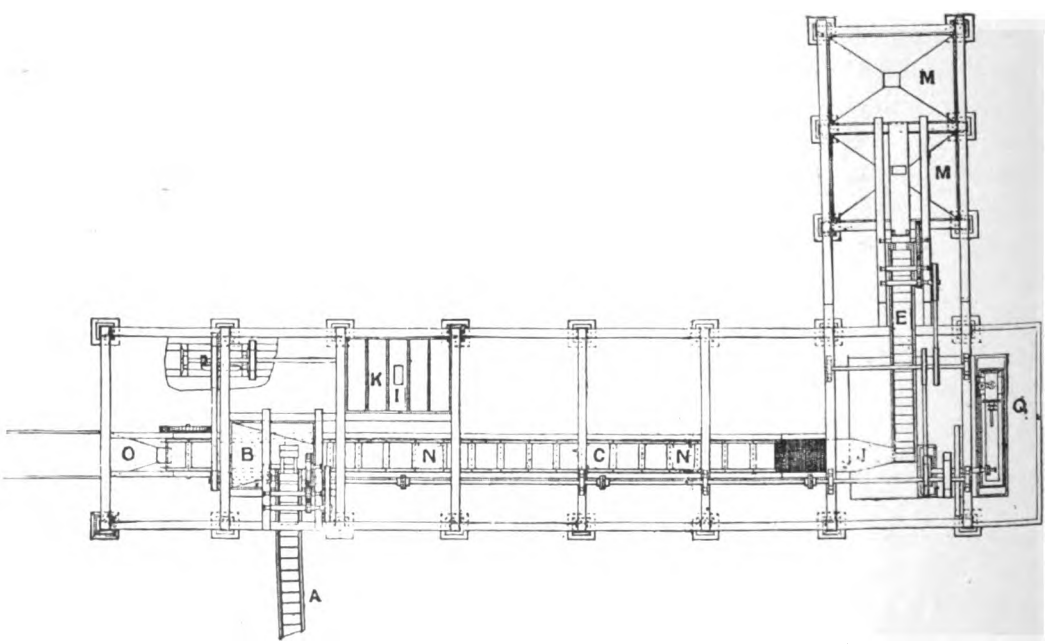

FIG. 977.

FIGS. 976 AND 977.—BURNETT COAL WASHER.

PLATE LXXXV.—(*To face page 454*).

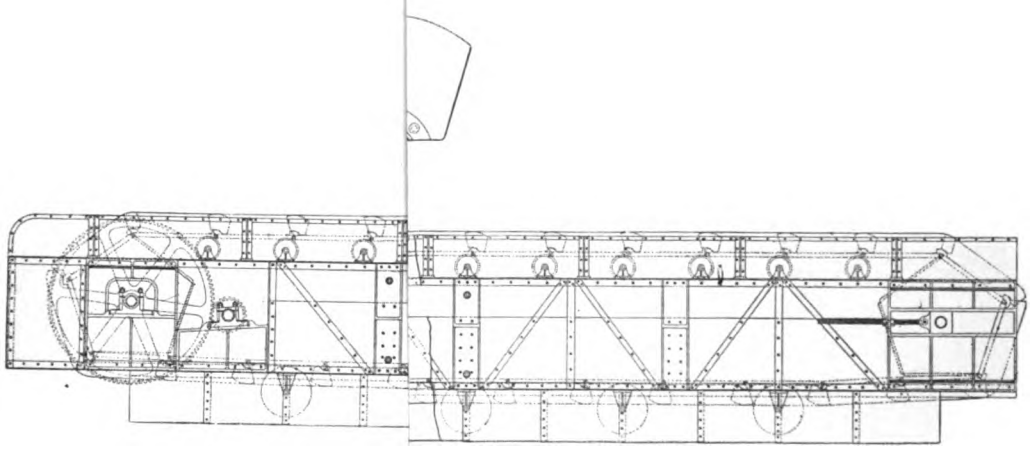

It cannot be said, however, that any of the foregoing machines are really efficient, though some give remarkably good results. So much depends upon the quantity and velocity of the water, the inclination of the troughs, the speed of dirt conveyors, the difference of the specific gravity between the coal and dirt, the want of facilities for adjustment, that really good all-round and constant results are practically impossible, and considering the general theory of coal-washing it is difficult to see how good results can be expected.

It has been conclusively shown by Rittinger, Pernolet and others that efficient separation can only be effected by a due consideration of the relative velocity of the current of water, to the dimensions and specific gravities of the cubes operated upon. Taking two pieces of mineral of the same diameter, the heavy piece with a high specific gravity will sink more quickly than the piece of low specific gravity, but a larger piece of the latter will sink at the same rate as the former. The latter condition is termed *equal-falling*, and Rittinger has shown that a piece of galena, with a specific gravity of 7·5 and a diameter of $\frac{1}{16}$ in., would sink only as quickly as a piece of quartz $\frac{1}{4}$ in. diameter and a specific gravity of 2·6. It is true, however, that the heavier material descends more quickly during the early part of the fall than the lighter material, and it is this fact which made washing in troughs at all possible. It must not be forgotten, however, that in the trough system of washing the particles are acted upon by two forces, viz., the velocity of the rushing stream of water, and the action of gravity, and it is easily seen that in the case of pieces of dirt with a specific gravity approaching that of the coal, gravitation may be counteracted by the flow of water, and more especially if the water becomes somewhat thick and *gummy*. In order to effect perfect separation the dirt must fall, and when mixed dirt and coal are delivered to a tank containing still water, the mixture will settle with perfect separation, supposing the particles are equal in size, the water sufficiently deep, and time is allowed for the lighter particles to fall. The same thing will happen if, instead of the mixture falling, the water rises at the same rate as the lighter material would fall. From practical experiment, Rittinger has deduced the following formula for the velocity of this water current.

$$V = C \sqrt{D(\delta - 1)}$$

where V = velocity of upward current of water in feet per second.

δ = specific gravity of the coal.

D = diameter of the cube = size of hole in screen.

C = a co-efficient, the value of which depends upon the nature of the medium in which the coal is falling. For clean water it may be taken as 1:28;

Taking note, however, of the fact that the heavier pieces of material fall more quickly at the first period of their descent, by giving a number of small upward pulsations to the water the mixture may be more or less perfectly separated, having

due regard to the diameter of the particles, difference of the specific gravity and velocity of the water. It is important to notice, however, that for perfect results it is necessary to first size into as near as possible equal dimensions the mixture of coal and dirt. Fig. 979, taken from Professor Galloway's *Lectures on Mining*, shows graphically the relationship between the velocity of fall, dimensions of screen and specific gravity for different materials. The figures on the left-hand side represent the diameters of the holes in the screen through which the particles will pass; those above the top line and on the right-hand side the specific gravities of the particles; and those along the bottom the absolute velocities with which the particles will fall

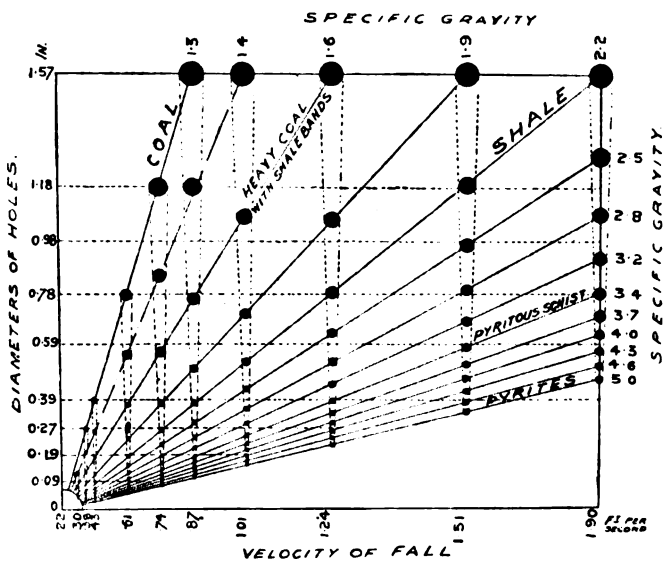

FIG. 979.

in water, in feet per second. Sandstone and fireclay being of practically the same specific gravity as shale, only the latter is mentioned in the diagram, and whatever applies to it applies equally to the other two substances. This shows that grains of the following sizes and specific gravities all attain the same velocity of 0·87 ft., or 10·44 in., per second in water:—

Substance.	Diameter of hole in screen. In.	Specific gravity.
Coal	1·57	1·3
Coal	1·18	1·4
Coal with shale adhering to it	0·78	1·6
Shale	0·39	2·2
Pyritous schist	0·19	3·4
Pyrites	0·09	5·0

Washing without classifying has been often tried, but without the success that attends a plant in which classification takes place before washing, and the diagram is specially instructive in this respect. For instance, take the example as given in the table, it is seen that a piece of coal with a specific gravity of 1·3, which has passed through a gauze with holes approximately 1½ in., will descend at the same rate as a piece of shale, whose specific gravity is 2·2, and which will pass through a hole approximately $\frac{7}{16}$ in. diameter; or in other words, if the water ascends at such a velocity as to keep the coal hovering on the surface of the water, this piece of shale will also hover on the surface, and finally pass off with the coal. In the above case the difference in the specific gravities is 0·9, but in many cases the difference is much less than this, which increases the difficulty. Again it is to be remembered that the dirt is seldom spherical in shape, but in the form of rods, flats, pyramidal and other shapes, while the pieces of coal are more cubical in shape, which further increases the difficulty of perfect separation.

The foregoing principles are now embodied in modern washing machines which are arranged to pulsate a continuous current of water upwards, lifting the coal, so to speak, out from among the dirt, and carrying it off. In Robinson's washer there is no pulsation, but merely a continuous stream of water, which enters at the bottom of an inverted cone, the coal being delivered at the top. A vertical shaft carrying four arms revolves in the cone, constantly stirring the mixed coal and dirt. The water rising overflows at the top, carrying with it the clean coal, while the stones settle in the bottom and are discharged by means of a trap consisting of a cylindrical-shaped vessel with a sliding door at the top and bottom; the top door is first opened, allowing the dirt to pass into the cylinder, which is then closed and the bottom door opened, which finally discharges it. It is a simple and cheap machine, but the efficiency is very low and too much depends upon the skill and attention of the attendant.

In an up-to-date washing plant the efficiency is high, little attendance is required, and practically no coal is lost, though the extent of the recovery plant in many cases is too complicated and expensive to be justified by the value of the amount of small coal so recovered. The usual arrangement consists of an elevator which raises the coal to the top of the building, when it is separated or sized either by revolving or shaking screens. It is then passed to a "washer," "bash" or "jig" as it is variously termed, where it is separated from the dirt, the clean coal being washed over a sill on to a draining screen, and from thence into wagons or storage hoppers as required, The bash consists of a wood or iron tank, as shown in figs. 980, 981 and 982, by Messrs. the Humboldt Company, tapering towards the bottom, and its upper portion divided into two compartments. The compartment on the left is fitted with a gauze perforated with holes slightly less in diameter than the

particles of coal to be washed; that on the right being provided with a square shaped piston, which is moved up and down by the shafts and crank arms fixed immediately above. Just above the level of the gauze on the left are two small apertures, communicating with a chamber leading to another chamber running in a transverse direction containing a spiral conveyor. The water enters at the valve shown on the right, and the whole washer is filled until it overflows at the sill on the left in figs. 980 and 982. The mixed coal and dirt are delivered to the washer close to the dividing plate of the compartments, and by the movement of the water is evenly spread over the whole width of the perforated plate, until filled to the level of the sill, after which a portion of the clean coal is washed over the sill at each pulsation, whilst a portion of the underlying dirt is washed through each of the small apertures into the passage leading to the dirt conveyor. The lower end of the cone terminates in a narrow neck fitted with a slide and below which is connected a pipe leading to the dirt or refuse elevator. This arrangement is to allow small pieces of dirt which pass through the holes in the gauze to be discharged. The apertures, above the gauze, as will be seen, are fitted with slides, operated by the lever attached to the bracket fitted to the sill, so that these may be regulated from time to time, as it is necessary to keep an even layer or bed of stones immediately underneath the coal, otherwise there is the danger of the coal passing off with the dirt, through these apertures, and these slides must be carefully regulated by the attendant, who may feel by his hand through the opening provided by the bracket whether the apertures are likely to become choked, as it is equally important that they be kept clear. The quantity of water is regulated by the butterfly valve and lever as shown.

These washers are only suitable for dealing with the various sizes of nut coal, and though the machines themselves are standardised, by altering the gauze, regulating the quantity of water, and adjusting the number and length of the strokes of the piston, they may be made to wash any size of coal from, say, 3 in. down to $\frac{1}{4}$ in. in diameter. Below this size down to $\frac{1}{16}$ or slightly less, it is necessary to adopt what is known as the "felspar" washer, which consists of a very similar machine, as shown in figs. 983, 984 and 985, except that they are usually made in sets of two or three. The stream of water and coal entering through the opening on the right passes over the two or three gauzes as the case may be, the water and clean coal leaving by the discharge sill on the left (fig. 983). Upon the gauze is placed a bed of broken felspar—the specific gravity of which is about 2 6—varying in thickness from 2 to 4 inches, the cubes being slightly larger than the diameter of the holes in the gauze, and having sharp broken edges. The washer is filled with water up to the level of the sill, and the pistons move quickly with a very short stroke, keeping the felspar and mixed coal constantly agitated, so that the particles of dirt sink into

FIG. 980.

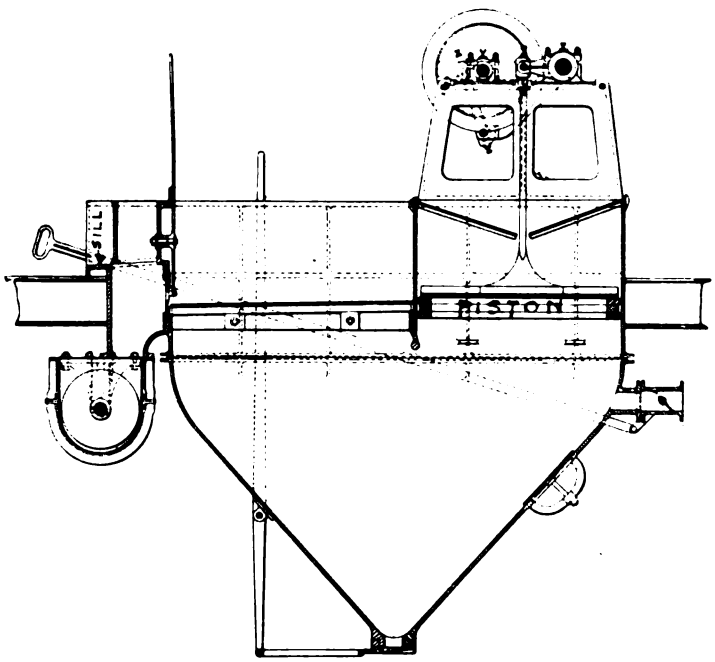

FIG. 981.

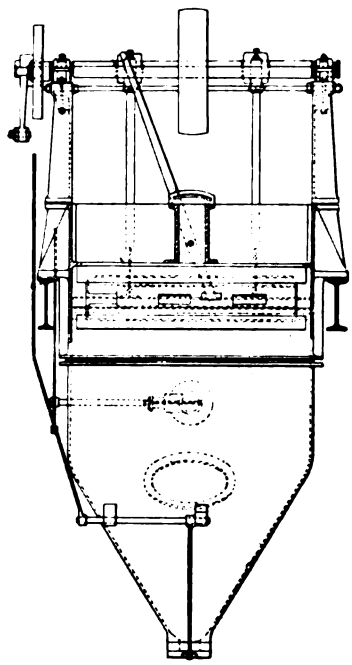

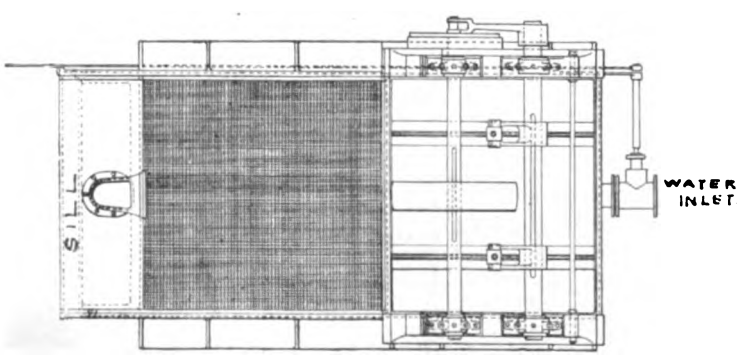

FIG. 982.

FIGS. 980 TO 982.—HUMBOLDT WASHING JIG.

Fig. 984.

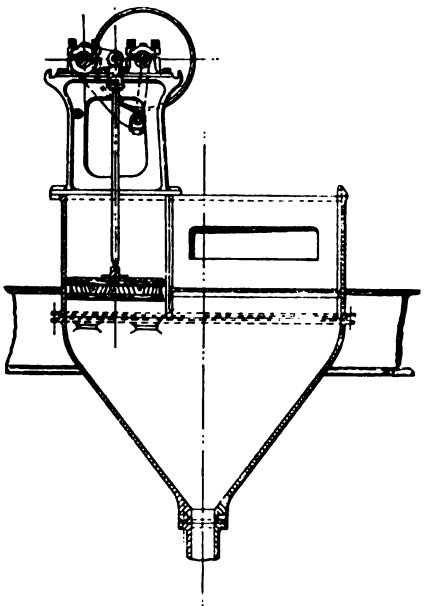

Fig. 983.

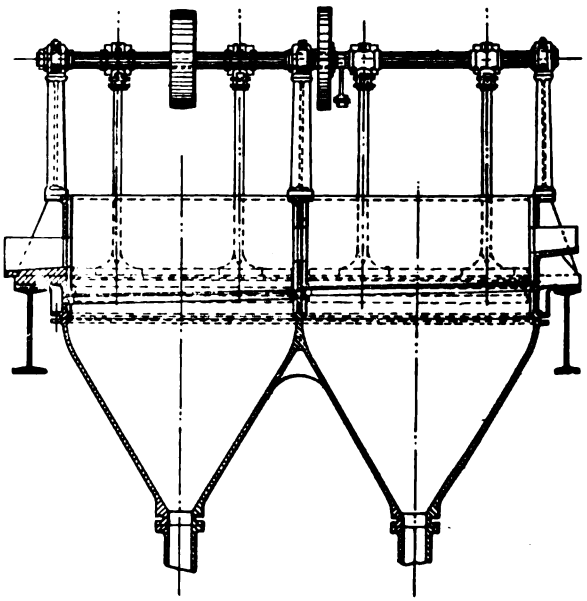

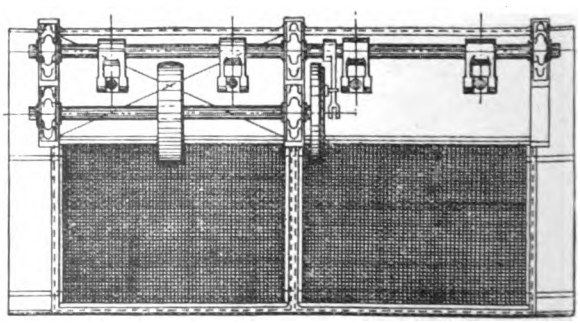

Fig. 985.

Figs. 983 to 985.—Humboldt Felspar Washer Jig.

PLATE LXXXVI.—(*To face page 460*).

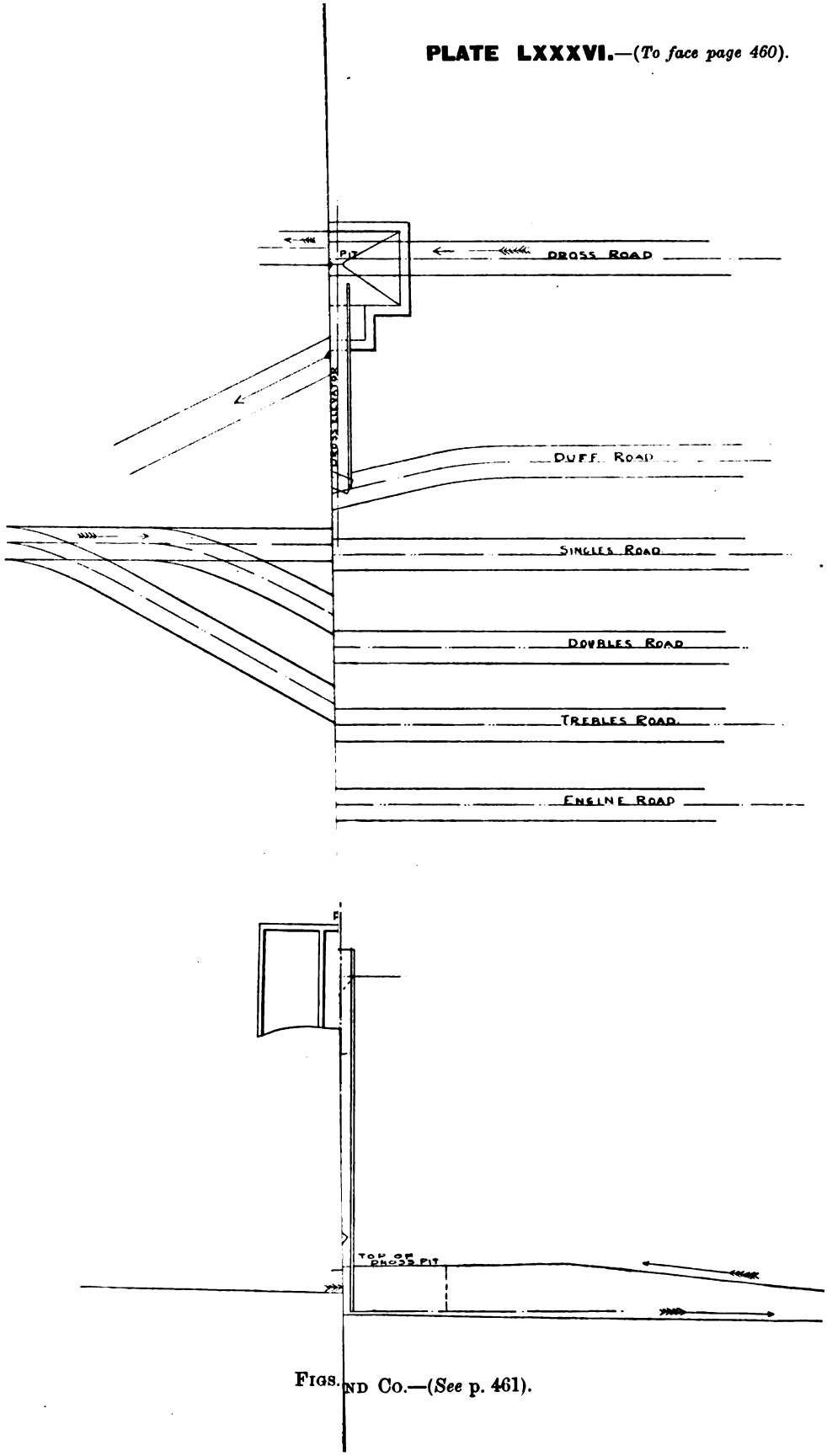

FIGS. ND CO.—(*See* p. 461).

PLATE LX)

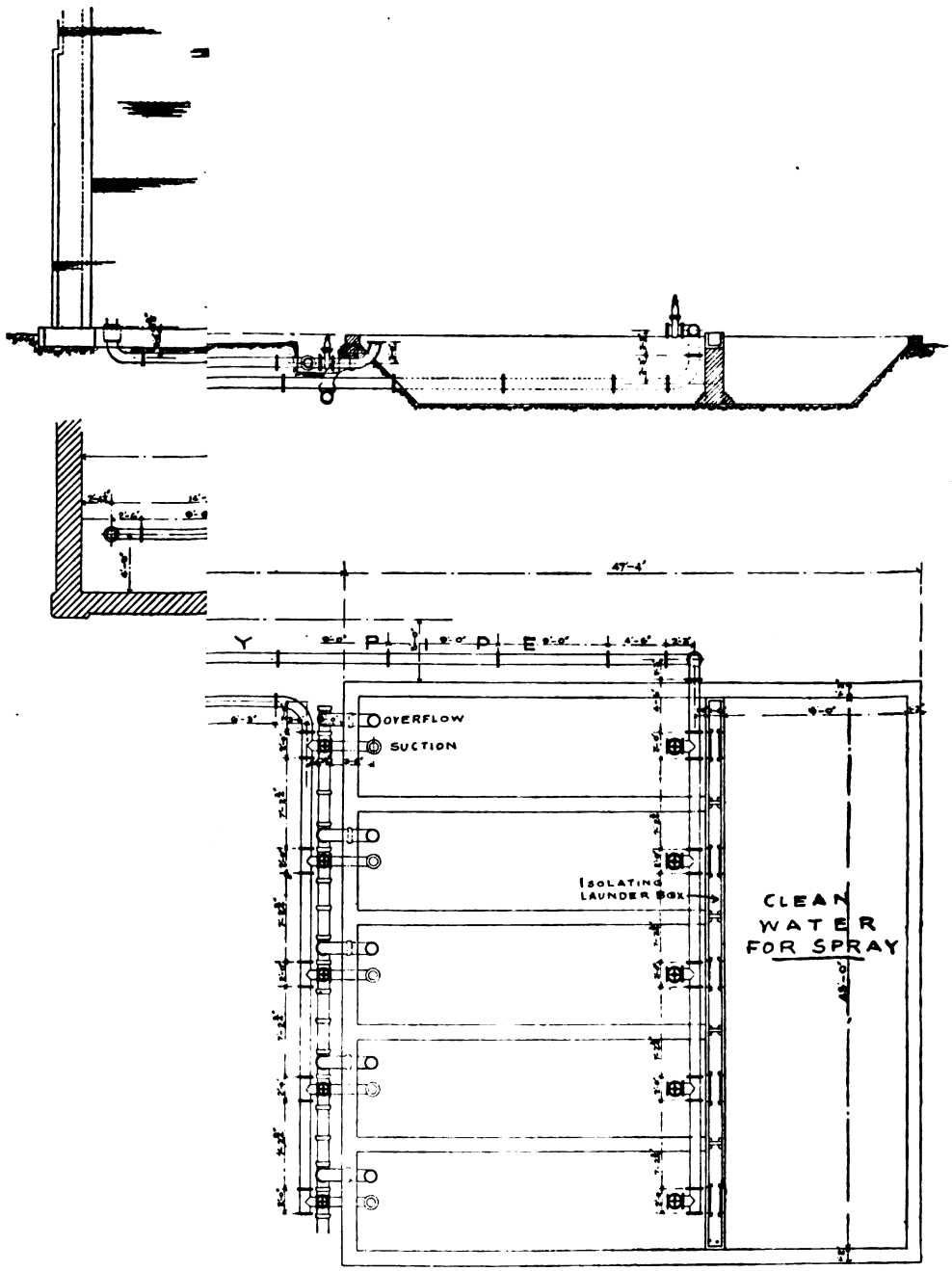

FIG. 992.

.Y SETTLING TANKS.

PLATE LXXXVIII.

FIG. 994.

FIG. 995.

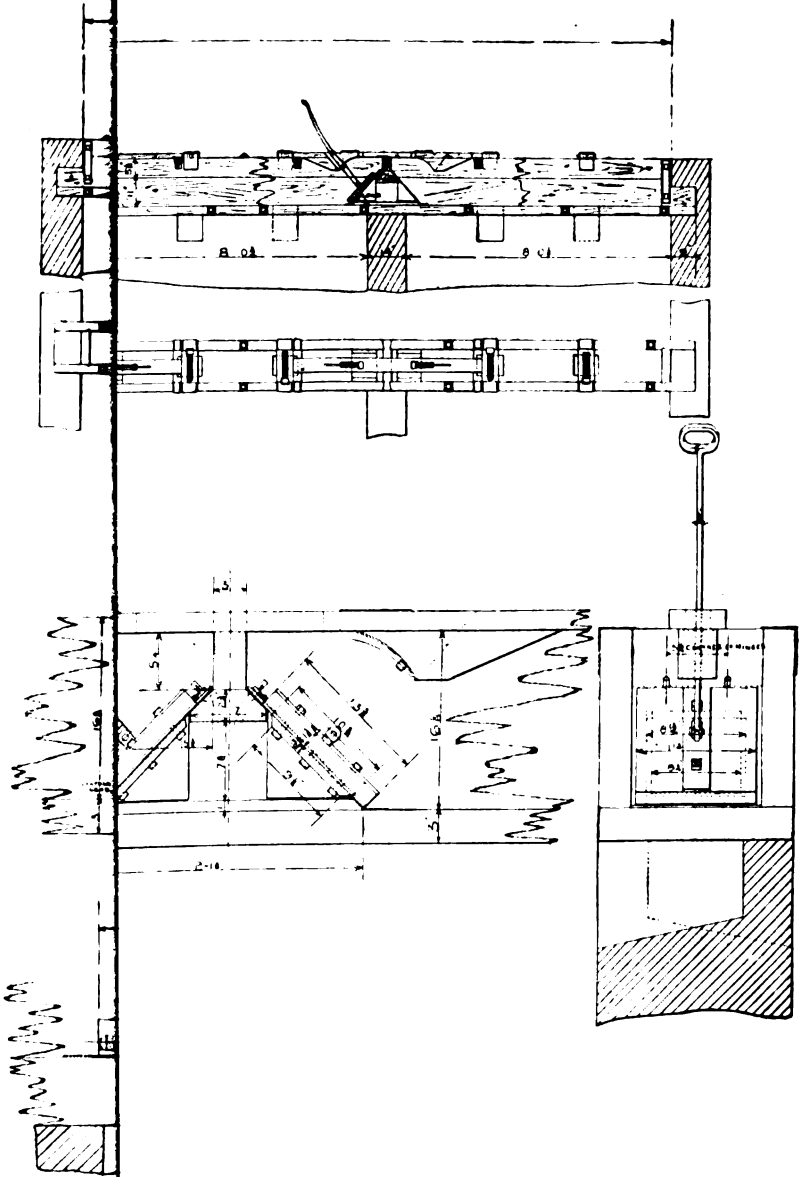

FIG. 996.

G LAUNDER BOX.

the bed of felspar, and passing through the holes in the gauze, are led through the down pipes to the dirt elevator. The felspar should have a specific gravity of rather less than the dirt, for good results, but as the dirt consists of material of different specific gravities, some light, some heavy, it is desirable that the specific gravity of the felspar should be as near the coal as possible. It will be seen, then, that the function of the felspar is to act as a sort of trap, and in order to keep it as effective as possible must be renewed as the corners get worn off and the cubes become more spherical-shaped.

In the machines illustrated the pistons are driven by a "bent lever motion," which causes the downward stroke to be made in about one-half the time occupied by the upward stroke, so that the upward impulse of the water is twice as quick as its return, which allows the particles held in suspension to settle more slowly. It is questionable, however, whether this claim can be substantiated, as it must not be forgotten that the inertia of the particles must be taken into account, and the quick upward rush may not be so effective in separating the particles as in machines where the pistons are operated with eccentrics, and the same time is occupied for both up and down strokes. The same motion (quick forward and slow return) may be obtained by means of a crank pin engaging with a block in an arm consisting of two guide bars, the arm being keyed to the piston rocker. In all cases, however, the method of driving is arranged so that the length of stroke of the piston may be readily adjusted, though as a rule the speed cannot be altered without changing the driving pulleys.

Figs. 986 and 987 show the general arrangement of a washery by Messrs. Campbell, Binnie and Co., to deal with 300 to 400 tons per day. The coal dealt with—from 2 in. and under—is delivered in wagons to the dross pit, and from there elevated to the revolving screen at the top of the building. Here the duff below $\frac{1}{4}$ in. is all taken out, and discharged into wagons without being washed. The remainder of the coal is divided by the screen into three sizes, namely, trebles 2 in. to $1\frac{1}{4}$ in., doubles $1\frac{1}{4}$ in. to $\frac{3}{4}$ in., and singles $\frac{3}{4}$ in. to $\frac{1}{4}$ in., each size by means of a hopper being led directly to the bash washers. The clean coal as it is washed over the sill of the bash, is received on a shaking screen A which drains out the water, and is passed on to another shaking screen, where it is re-sized and delivered to the shoot leading to the hoppers. The dirt is conveyed by means of the pipes under the washers, to the refuse elevator, provided with perforated buckets, and is raised to a shoot which discharges it either directly into wagons or into a hopper. The water drained off the screens is received in a canal or launder immediately underneath, and as a quantity of coal in the shape of small particles disintegrated during the process of washing, is carried off with the water, the latter is received on a copper gauze with very fine perforations which allows the water to drain off, while the fine

coal is discharged in a wet state to the duff wagon, where the moisture is quickly absorbed by the fine dry duff, and the dust considerably reduced. The water is collected in a well at the end of the gauze, and from thence runs back by pipes to the settling or sludge pond, from which it is repumped and circulated by the centrifugal pump. As the coal passes over the shaking screens it receives a cleansing spray, which washes off any black or dirt which may be adhering to the surface of the cubes, and the coal is delivered into the wagons perfectly clean and bright. In

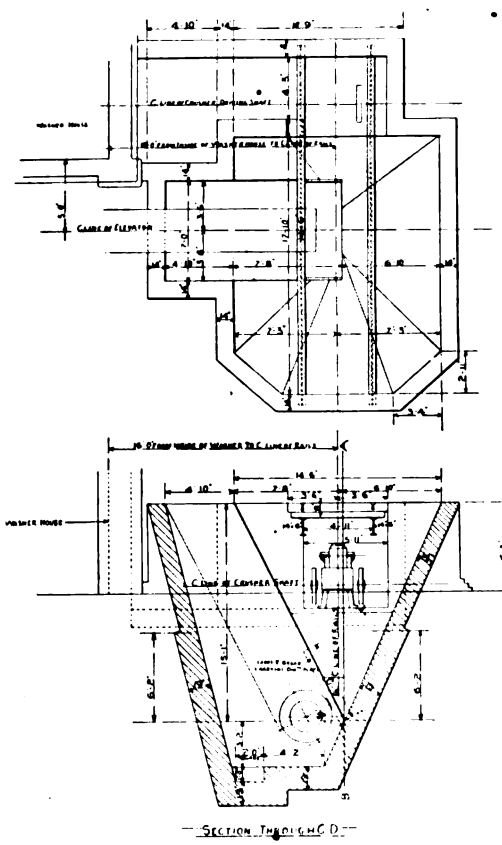

FIGS. 988 AND 989.—DROSS PIT.

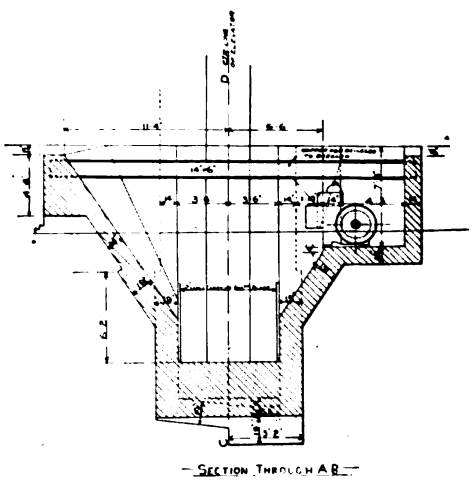

FIG. 990.—DROSS PIT.

addition to discharging the duff into wagons, which is used for boiler firing, it may be conveyed direct to the latter by means of a scraper conveyor.

Further, as a considerable quantity of coal is contained in the *débris* hand-picked from the screens, a breaker is arranged in the dross pit, as shown in figs. 988, 989 and 990. So far the arrangement is simple and free from complications, but it is still necessary to provide means for storing the water, and collecting the sludge, and

in order to do this as efficiently and economically as possible, the arrangement of settling ponds, shown in figs. 991 and 992 (Plate LXXXVII), was designed by the author. A pond about 15 yards square is divided into six compartments or tanks, the largest one being reserved for clean water for the spray pump. The other five are formed with brick and cement partitions, with a common water delivery pipe provided with a sluice valve for each compartment running along one end, and a suction pipe provided with valves in a similar manner at the other end as shown. In addition, at the suction end is laid an overflow drain pipe, the open end in the tank being provided with a stopper. The water from the washers is delivered by means of the pipes to any compartment, say, for instance, No. 1, this valve being open and the others closed, and the water allowed to run in until it fills and overflows to No. 2, which in turn will overflow to No. 3, and so on to No. 5, from which compartment the water will be re-drawn by the centrifugal pump. (Note: At the start this compartment must, of course, be full.) The coal held in suspension is thus deposited gradually in the tanks, until one becomes full, when the delivery valve is closed and another valve opened; and by forming a clay dam on the division wall, any of the tanks may be shut off from the others and the silt coal recovered.

To allow the water to flow from any one compartment to any other, the isolating and controlling launder box, details of which are given in figs. 993 to 997 (Plate LXXXVIII.), is fixed at the end of the compartments. Openings in the bottom are made into each dirty water compartment, and also on the "spray" or clean water side, whilst partitions in the box separate the compartments, all the openings being covered with a simple flap valve, worked by an iron handle. Thus any compartments may be supplied with clean water from the clean water reservoir, or supposing it is required to shut off the middle or No. 3 compartment, allowing the water from the washer to be delivered into No. 1 and drawn from No. 5; the bottom valves in No. 3 would be closed, and opened in Nos. 2 and 4, the partition valves on each side of No. 3 being opened, and closed on opposite sides in Nos. 2 and 4. Thus the water would flow from No. 1 to No. 2, through the bottom opening in the launder box, across No. 3 and into No. 4, and thence into No. 5. Owing to the fine copper gauze, very little coal is carried into the settling tanks—which are lined with cement—but what coal is carried away in this manner is recovered in the form of sludge or mud from the tanks. Such an arrangement, however, is not ideal, and has only the recommendation of cheapness in its favour, and whilst answering the purpose in the case of a small plant, such a means of recovering the silt would be out of the question in a large plant, both on account of the ground area required for the ponds, and the labour cost for its removal.

A much more complete plant by Messrs. Campbell, Binnie and Co. is shown in figs. 998, 999 and 1,000. Here the coal is delivered to the pit either by wagon or by a conveyor, hydraulic rams being provided on each side of the pit for discharging the wagons, these having end doors. The coal is then elevated to the revolving riddle, and sized into "duff," "singles," "doubles" and "trebles," one washer each being allotted to the two larger sizes, two to the singles, while the small or duff is washed in two sets of felspar washers, each consisting of two rows of three bashes. The three larger sizes are washed, sprayed and drained over jigging screens and discharged by means of jiggers and shoots into wagons as previously described. The water, however, is collected from under the drying screens, and together with any small coal it may contain, is run back to the felspar washers, receiving the duff from the revolving screen on its way. The mixture is then passed over the felspar washers and returned to the pearl coal recoverer shown in figs. 998 and 1,000, the object of which is to recover any coal that may have been re-broken after passing through the revolving screen and washed through the holes in the draining plate. It should be mentioned here that these draining screens are fitted with perforated plates with holes to suit the required finished size of the product, and in fact by passing over these screens are re-sized, so that should any pieces of coal become disintegrated during their passage through the machine, the final sizing discharges them into the right wagons, secondary shoots being arranged under the perforated plates to attain this end. The pearl recoverer consists of a small tank, with a set of perforated buckets constantly and slowly revolving, gathering all the larger particles and discharging them into the "singles" wagon, while the small or duff coal, and the water, is conveyed by pipes to the fine coal and silt recoverer.

This latter consists of a long tank built up with cast iron plates, with water-tight joints, of suitable dimensions to deal with the output, and may be placed in any convenient position, either near the washery, or if the coal is to be used for boiler firing purposes, it may be placed adjacent to the boiler bunkers; and, in fact, in one instance, viz., at Polmaise Colliery, the small from the recoverer is delivered direct into the bunkers. The water is passed in at one end and is drawn out at the other, and the reduced velocity of the water is sufficient to allow the coal and silt to settle in the bottom, where it is gathered by the slowly and continuously moving perforated buckets, and as a rule this arrangement is found quite sufficient to meet all practical requirements so far as clarifying the water is concerned, in most cases. It is, however, only a question of multiplying such or other similar arrangements, whereby it is possible to recover practically every particle of coal, and the usual method is to gather the slimes by continuously moving elevators and return them also continuously to the fine coal washers. In other cases the water from the settling tanks is conveyed to the refuse stone heap, and allowed to percolate through the mass,

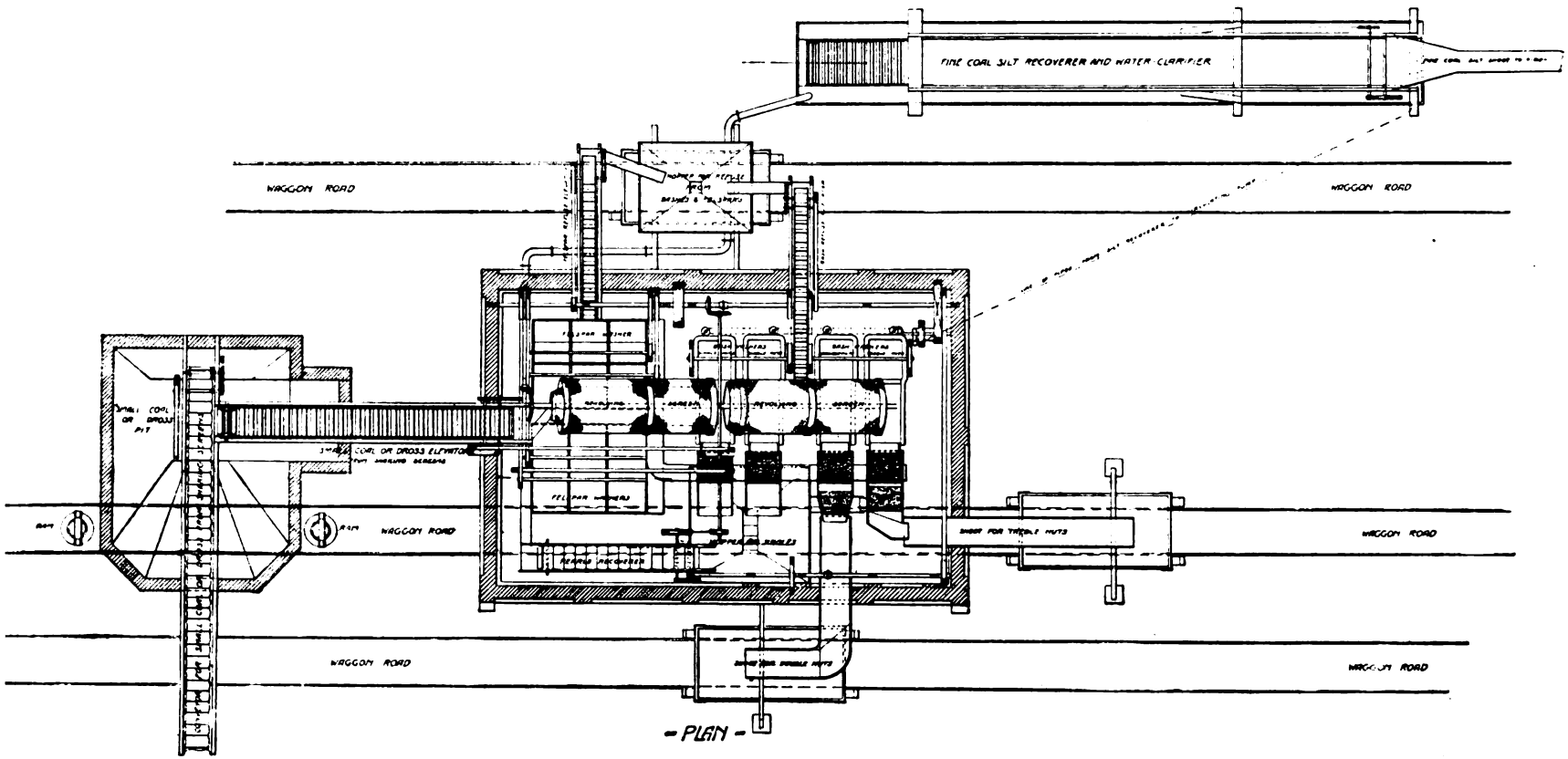

FIG. 998.—WASHING PLANT BY MESSRS. CAMPBELL, BINNIE AND CO.

FIG. 999.

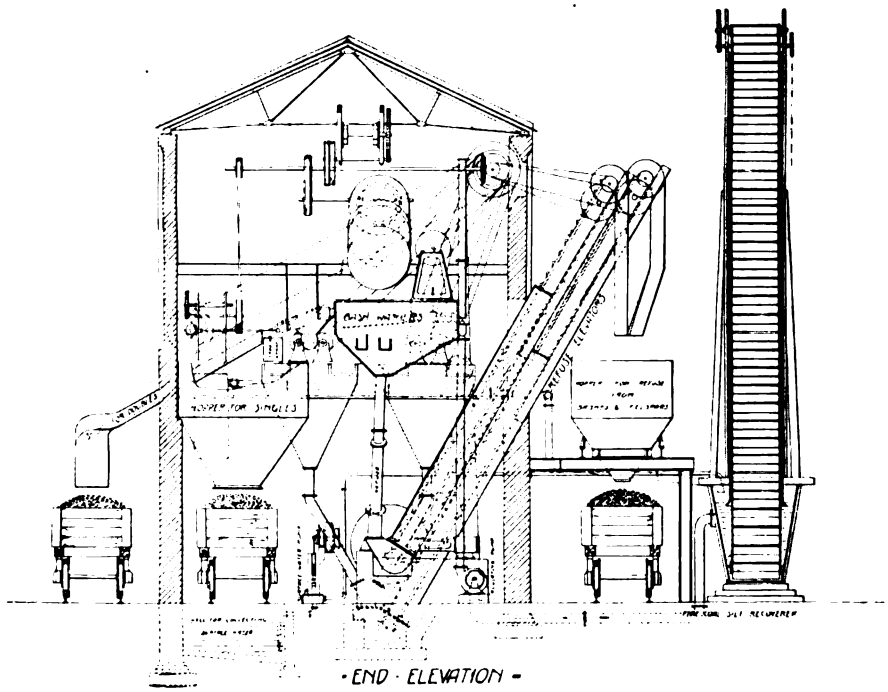

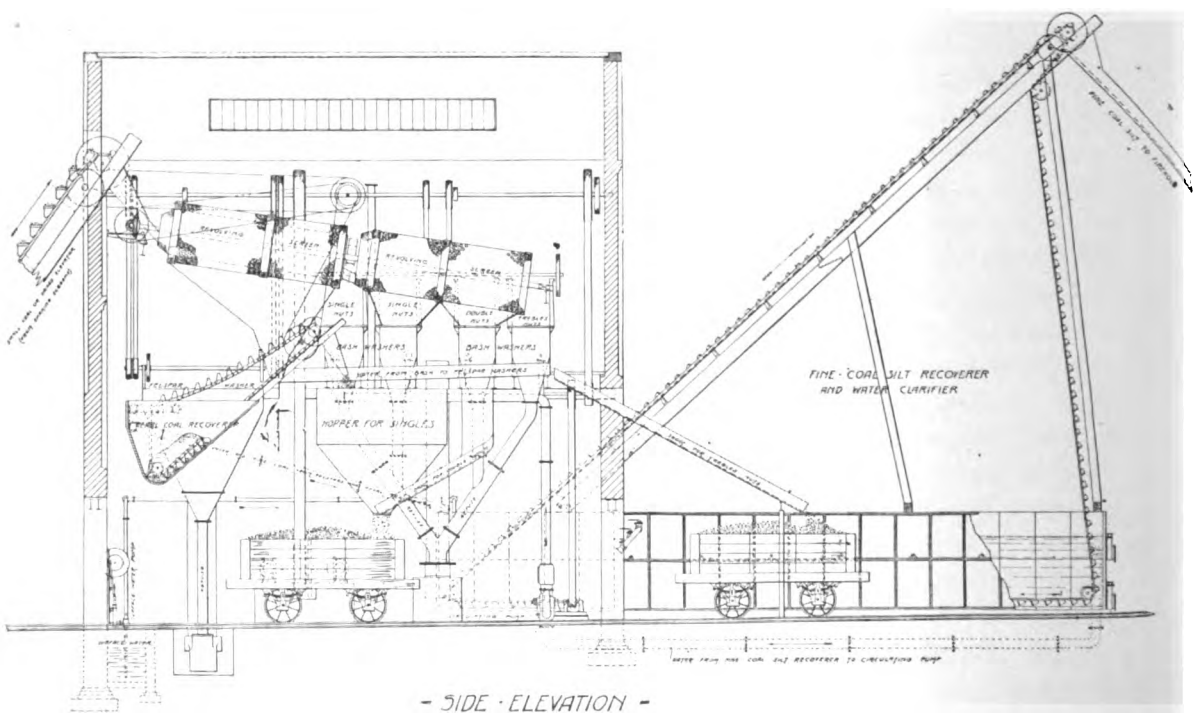

FIG. 1000.

WASHING PLANT BY MESSRS. CAMPBELL, BINNIE AND CO.

being re-collected in a well and re-pumped through the washery, and generally with regard to the questions of recovering coal and clarifying water there is no difficulty whatever, and it is merely a question as to whether the capital outlay required to gain the object desired will be justified by the return that it yields. In this case the water is re-pumped from the silt recoverer by a centrifugal pump and used over and over again; also the water draining from the wagons is gathered in a well as shown and returned to the recoverer tank, so that the actual loss of water is reduced to a minimum.

The dirt is conveyed from the washers by means of pipes, as shown, into the boots of the two elevators—which are, of course, full of water to the same level as the water in the bash tanks, and are therefore made watertight—and the buckets being perforated the dirt is delivered as dry as possible into the common refuse hopper, from which it is removed from time to time in wagons. The plant is driven by a small steam engine, and the whole is contained in a substantial brick building; the revolving riddle is fully enclosed in a wood box, reducing dust to a minimum, and is further provided with self-acting brushes which keep the small wire gauze from becoming clogged, and in both plants the railways are laid so that the wagons gravitate under the hoppers, and it is important to notice a separate road is arranged for each class of coal, so that the loading from one shoot is not interfered with by another; also the full trucks bringing the small coal to the dross pit after being emptied may be run under a shoot to be filled with washed coal.

A much more pretentious plant is shown in figs. 1,001 to 1,011 (Plates LXXXIX. and XC.), built by the Humboldt Engineering Company, the capacity of which is 1,600 tons per day of ten hours, or 80 tons an hour.

The chief feature of this plant is in the arrangement of the hoppers and water tanks, which are formed in the building above the loading level of the wagons, one of the most expensive arrangements it is possible to adopt. The plant consists of two complete washeries, each capable of dealing with 40 tons an hour, and working independently of the other.

The unwashed coal is delivered from railway trucks into the pits A, from which the coal is elevated by the bucket elevators 1 to the swinging screens 2, where it is sized into four sizes, viz., from 2 to $1\frac{1}{16}$; $1\frac{1}{16}$ to $\frac{3}{4}$; $\frac{3}{4}$ to $\frac{3}{8}$; $\frac{3}{8}$ to 0 inches. These different sizes are then conveyed to the bash washers 3, and after washing, the nut coal flows off with the water to the nut draining screens 4, and after the water is drained off is collected and stored in the nut hopper B underneath the screen, and then loaded into railway trucks. The small coal from the fine washers is conveyed to two of the small coal bunkers C, where it is allowed to drain. So soon as two are full, another two are brought into use and so on, and when all are full, the first two are emptied by loading the coal into trucks, when they are ready for filling

again. These bunkers are provided with draining pipes in the centre and draining channels at the top, the former draining the coal as it settles in the hopper, and the latter carrying off the overflow water. From the overflow channels the water is conveyed to the tank D, from which it is drawn by the centrifugal pump 5 and used over again, while the water from the drain pipes is collected in the drip water tank F, which collects the drip water from all the bunkers, from which it is pumped for re-use in the coal launders by the pump 10. The middle-sized coal and dirt is raised by the bucket elevator 6 to the mills 7 where it is crushed and returned to be re-washed in the washer 8, and the coal so recovered is conveyed by the washing water to the bunker E, from which, after it sufficiently drained, it is drawn off and used as boiler fuel. The dirt is raised by the bucket elevator 9 to a highly-situated launder and flushed with water to the dirt heap. The plant is driven by a compound slow-speed condensing steam engine. To prevent breakage of the nut coal as it is discharged into the bunker, a spiral shoot is provided as shown in B.

The whole plant is thoroughly substantial, the bunkers being all tied together by tie bolts passing through the length and width of the building, and the only possible objection that can be made against it is that of expense. It must be remembered that a coal-washer erected at a colliery can have only a certain life, long or short, according to the extent of the coal area to be worked and the rate of working, and further it is possible to carry the refinement in washing until the product actually costs more than it is worth, and the critical point is not so easily distinguished. This greatly depends upon the market value of the coal delivered to the washer, and the enhanced value after washing, as it is evident the latter will be decreased in weight by the amount of dirt removed, which, had the coal been sold as "unwashed," would have been included as part of the coal sold; and again there is the *cost* of washing made up of interest and depreciation on the capital expenditure, upkeep, running costs, and labour. The foregoing applies more to "saleable" coal than to "coking" coal, especially if the whole of the output is coked, and the coal contains a quantity of ash, and even then refinement in recovery and re-washing machinery may be carried to such a point as to cost more than the value of the extra amount of coke so gained is worth. For instance, suppose a washing plant involving a certain capital expenditure yields satisfactory profitable results down to a certain point, but beyond this point there is a slight loss of coal, which "washed" would have a certain value, but cannot be continuously recovered without going to considerable further capital expenditure; the question then becomes—will the amount of coke, gained by the recovery plant, cover the interest on capital expenditure and cost of upkeep and working of the extra plant? and can only be decided by a complete and thorough investigation of the circumstances.

Another plant capable of dealing with 1,000 tons per day by Messrs. Coppée is

FIG. 1001.

FIG. 1003.

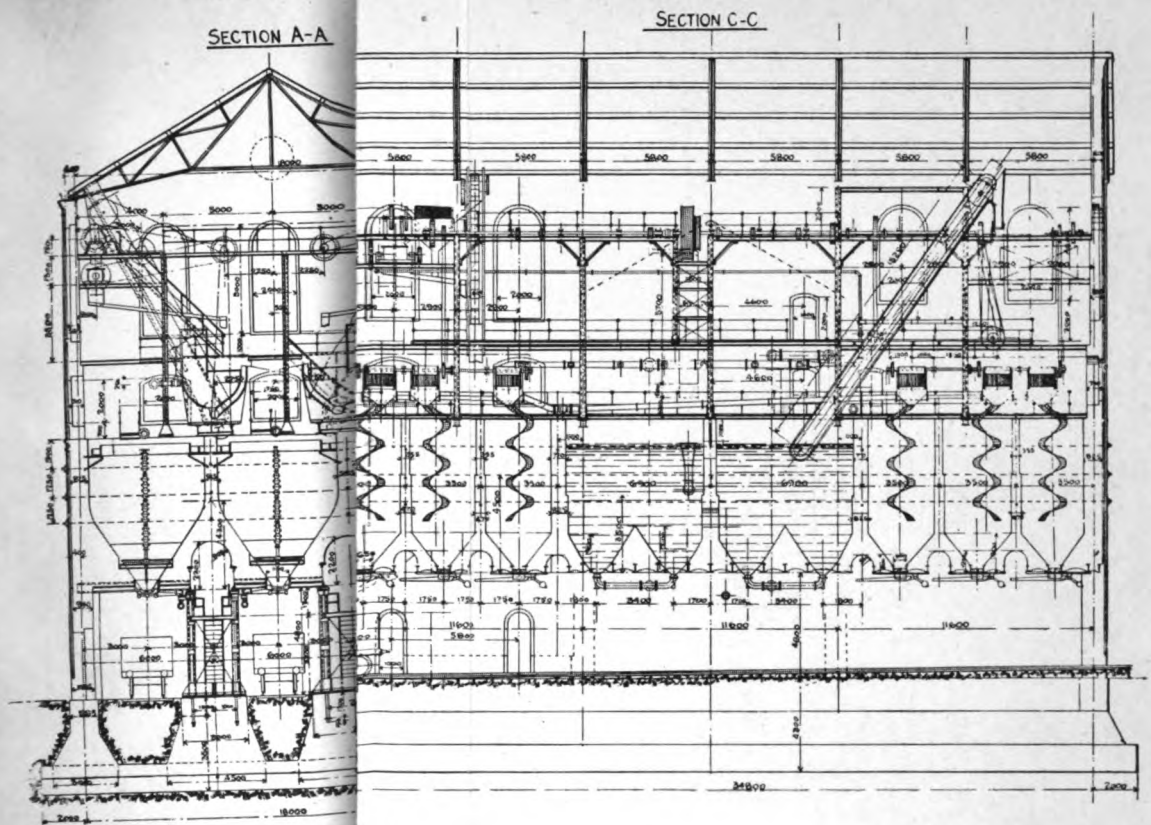

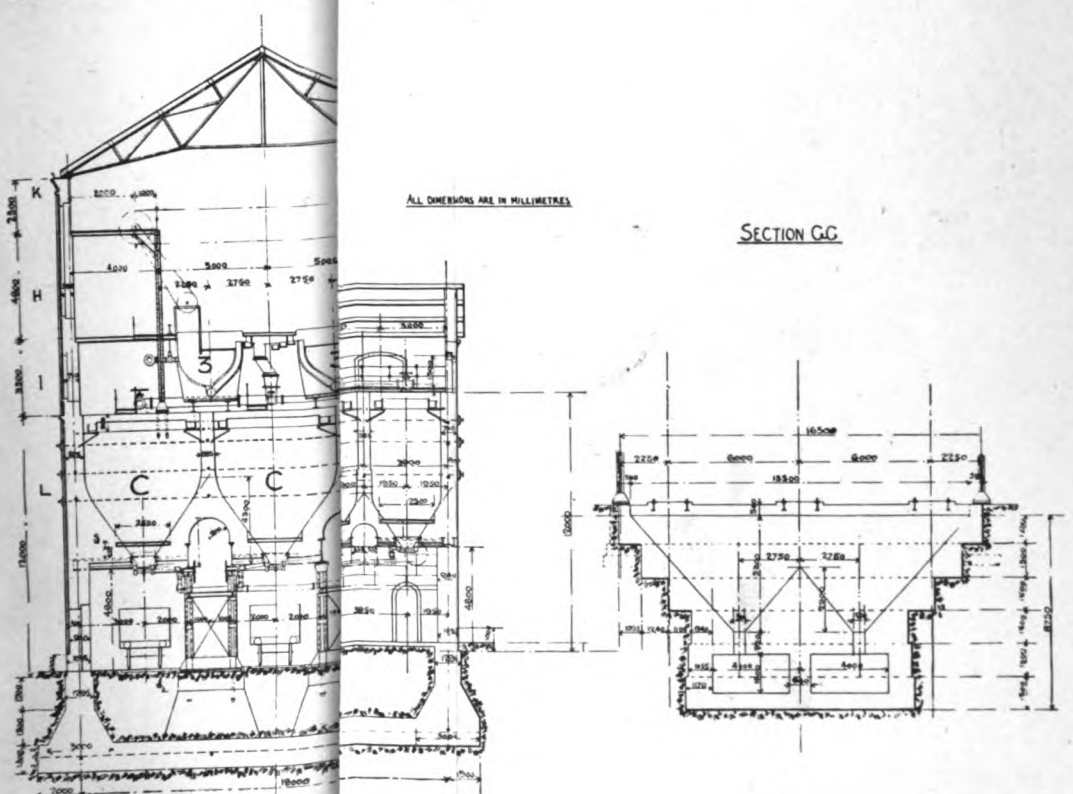

FIG. 1007.

FIG. 1009.

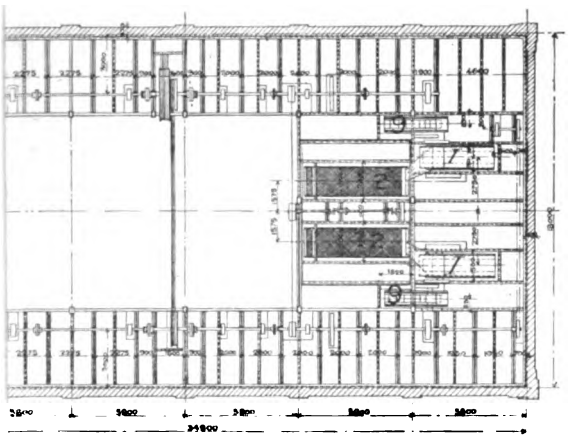

SECTION K-K.

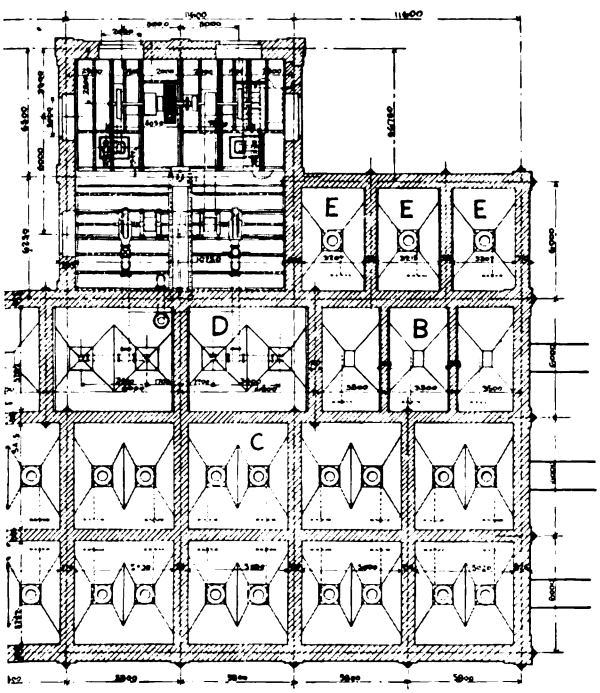

SECTION L-L.

FIG. 1011.

ASHER.

Section C D

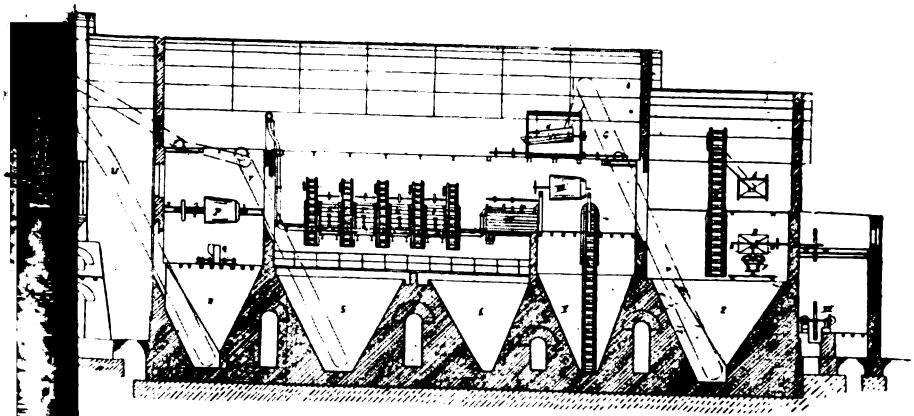

Section IV

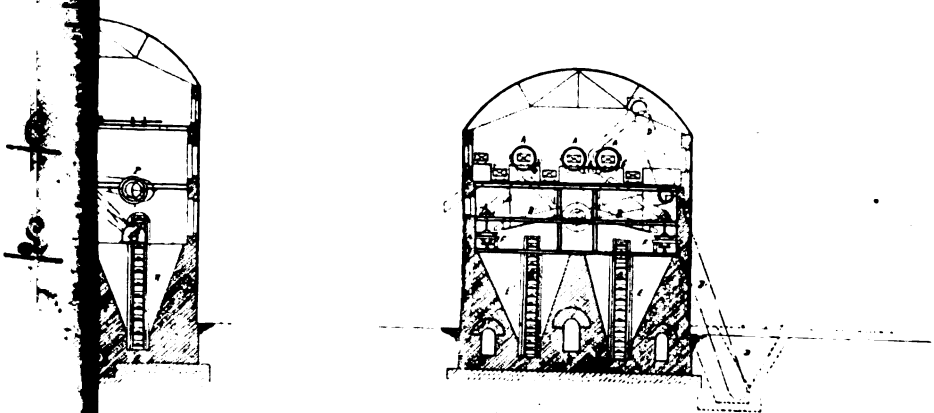

Section R S

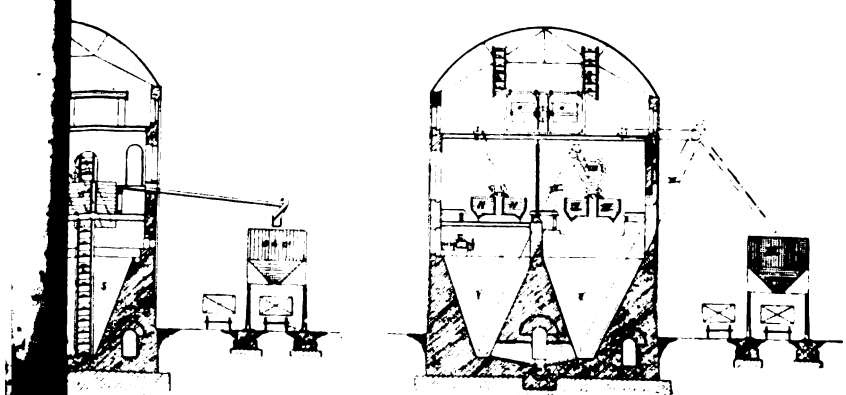

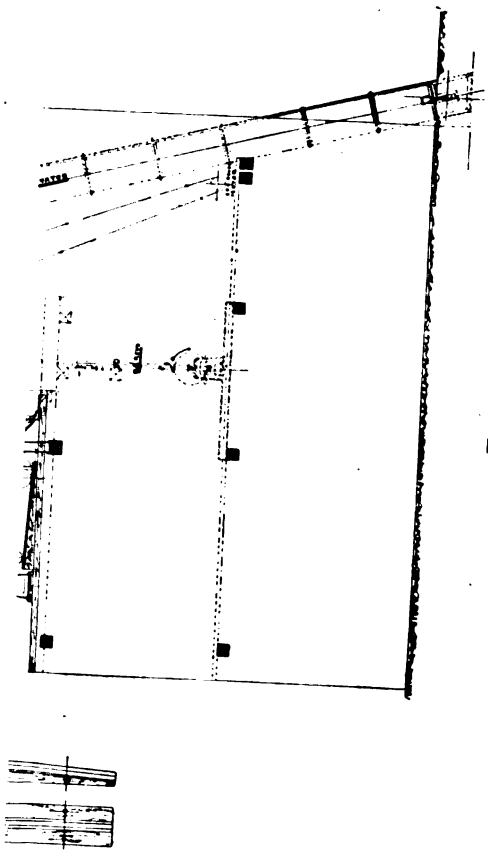

FIG. 1024.

TO 1025.—GENERAL ARRANGEMENT OF CRAIG'S PATENT WASHER.

shown in figs. 1012 to 1019 (Plate XCI.) This plant is designed to receive the coals direct from the pit in tubs, which are delivered on the level *a*, and tipped by the revolving tipper A on to a longitudinal shaking screen, the tubs running from the tipper and out again by gravity to the level *c*. Coal may also be supplied in large trucks by means of the siding and hopper or pit D, from which it is raised by the elevator as shown. The shaking screens B and B′ divide the coal into two sizes above and below $1\frac{1}{2}$ in. round holes. The small falls directly into the unwashed coal hopper E, and the large is delivered into a coal breaker F, where it is crushed before being passed to the hopper E, from whence it is raised by the elevator G to the classifying screen of the shaking type H, where it is divided into four sizes, viz. :—Nuts between $1\frac{1}{2}$ in. and $\frac{13}{16}$ in. ; peas between $\frac{13}{16}$ in. and $\frac{3}{8}$ in., these being washed in the bash washers I and K ; small between $\frac{3}{8}$ in. and $\frac{3}{16}$ in., washed in four felspar washers L ; and duff between $\frac{5}{16}$ in. and 0, which is washed in two felspar washers M.

The washers separate the unwashed coal into three products—clean coal, coal and shale (*i.e*, pieces of clean coal with shale adhering—heavy coal), and shale or dirt. The nuts and peas from the washers are sent by launder boxes either to the two fixed draining screens N and thence to the bunkers O, to be sold as washed nuts or peas; or to the revolving draining screen P, from which they pass to the disintegrator Q, where they are ground up and delivered to the hopper R. The small coal and duff washed by the six felspar washers L and M is conveyed to the hopper S, from where it is raised and drained by the perforated elevator T, and delivered to the hopper R, where it mixes with the crushed nuts and peas. The mixture is then raised by the elevator U, on to the scraper conveyor V, placed on top of the washed small coal bunkers W. The scraper conveyor V carries the coal into the different compartments.

The shale or dirt from all the washers is conveyed by a launder box to the trough II, from which it is raised by the elevator III into the bunker IV. The mixed coal produced by all the felspar washers is sent to the hopper V, which also receives the heavy coal from the nut washers after it has passed through the toothed crushing rolls VI.

From here all the mixed coal is raised by the elevator VII into the revolving screen VIII, which makes two sizes each to be re-washed in one of the two felspar washers IX. The washed coal obtained from these two mixed coal washers is delivered to the small coal hopper S, and the shale to the dirt bunker II.

All the water from the draining screens is sent to the mixed coal hopper V, while all the overflow water from the washed coal hopper S and the slurry hopper X is sent to the pump trough to be used over again. The overflow water from the shale bunker II and from the mixed coal bunker V, is sent to the slurry hopper X. The settlings from the shale and mixed coal water in the trough X are not good

enough for re-use, and are therefore run off through the culvert XI by valves placed at the bottom of the hopper X. The centrifugal pump XIII supplies the water to all the washers by means of pipes, cocks, and valves. A pair of engines XIV drive the whole of the plant with the exception of the lump coal screening and breaking plant, which is driven by the engine XV, and washed small coal elevators, which are driven by the engine XVI. These elevators are driven by a special engine, in order to be able to stop all the other machinery, and keep this small engine working to empty the hoppers after the coal supply for washing is stopped.

It will be noticed that in both the foregoing machines the dirt from the middle-sized washers is re-washed after crushing, and that a considerable amount of machinery—and consequent capital expenditure—is required, and it is really questionable if the yield of clean coal justifies this method of dealing with it. If the proportion of dirt exceeds that of the coal, then the washer becomes choked, so to speak, and an amount of dirt passes off with the coal, and mixing with the clean coal from the other washers increases the percentage of ash, thus decreasing the efficiency of the whole plant; and further, the difference between the specific gravities of the coal and the shale intergrown with it may be so slight as to make it practically impossible to separate them by washing. In any case the point is a very fine one, and requires careful consideration before embarking on large capital expenditure.

Instead of first washing a portion of the nuts and then re-washing the dirt, it would appear that better results might be obtained by first crushing the dry coal and washing all the small at one operation. This method gets rid of any difficulty in regard to overloading the washers, and further reduces the amount of machinery required; and, undoubtedly, where the coal is for coking purposes only, this is much the better plan to pursue.

In Craig's patent washer, as manufactured by Mr. C. W. Lyons, of Dewsbury, which is essentially a plant for washing coal for coking purposes, the whole of the coal is first ground up into very small particles before being washed. A general arrangement of a plant supplied to Messrs. the Carlton Iron Company Limited, is shown in figs. 1020, 1021, and 1022, capable of dealing with 400 tons per day. Figs. 1023 to 1025 (Plate XCII.) show the arrangement of the washing machines, while figs. 1026, 1027, and 1028 show in detail the construction of the machine, which is a departure from the usual method of coal washing.

The principle involved so far as the separation is concerned is, of course, the same as for all washers, viz., the difference in the specific gravity of the material to be separated, but the method of operation is akin to the "bumping" machines so much used in separating metallic ores. The coal in this case is delivered from wagons to a pit or hopper, as shown in fig. 1020, and raised by an elevator to a dry coal

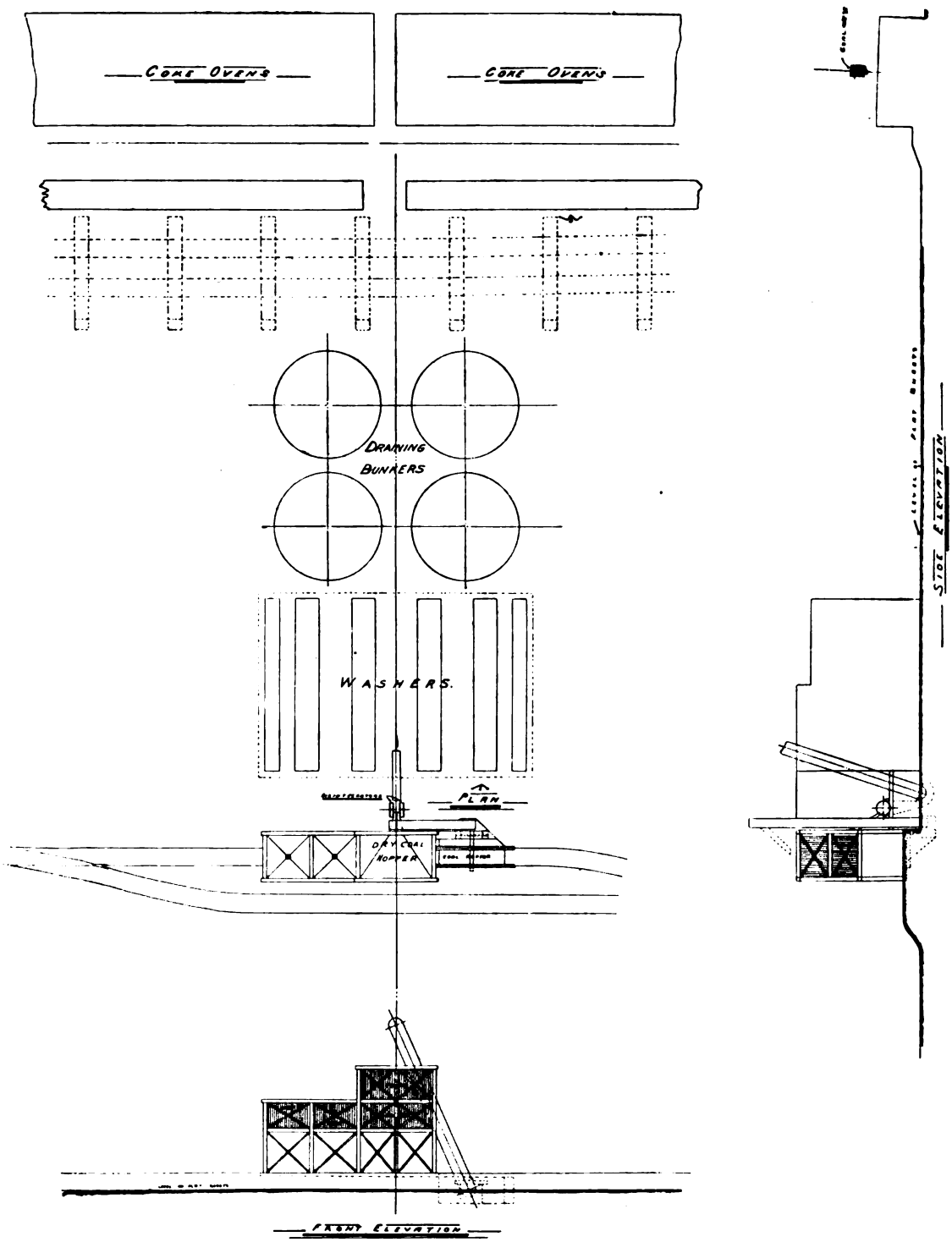

FIGS. 1020 TO 1022.—GENERAL ARRANGEMENT OF CRAIG'S COAL WASHING PLANT.

Fig. 1026.

Fig. 1027.

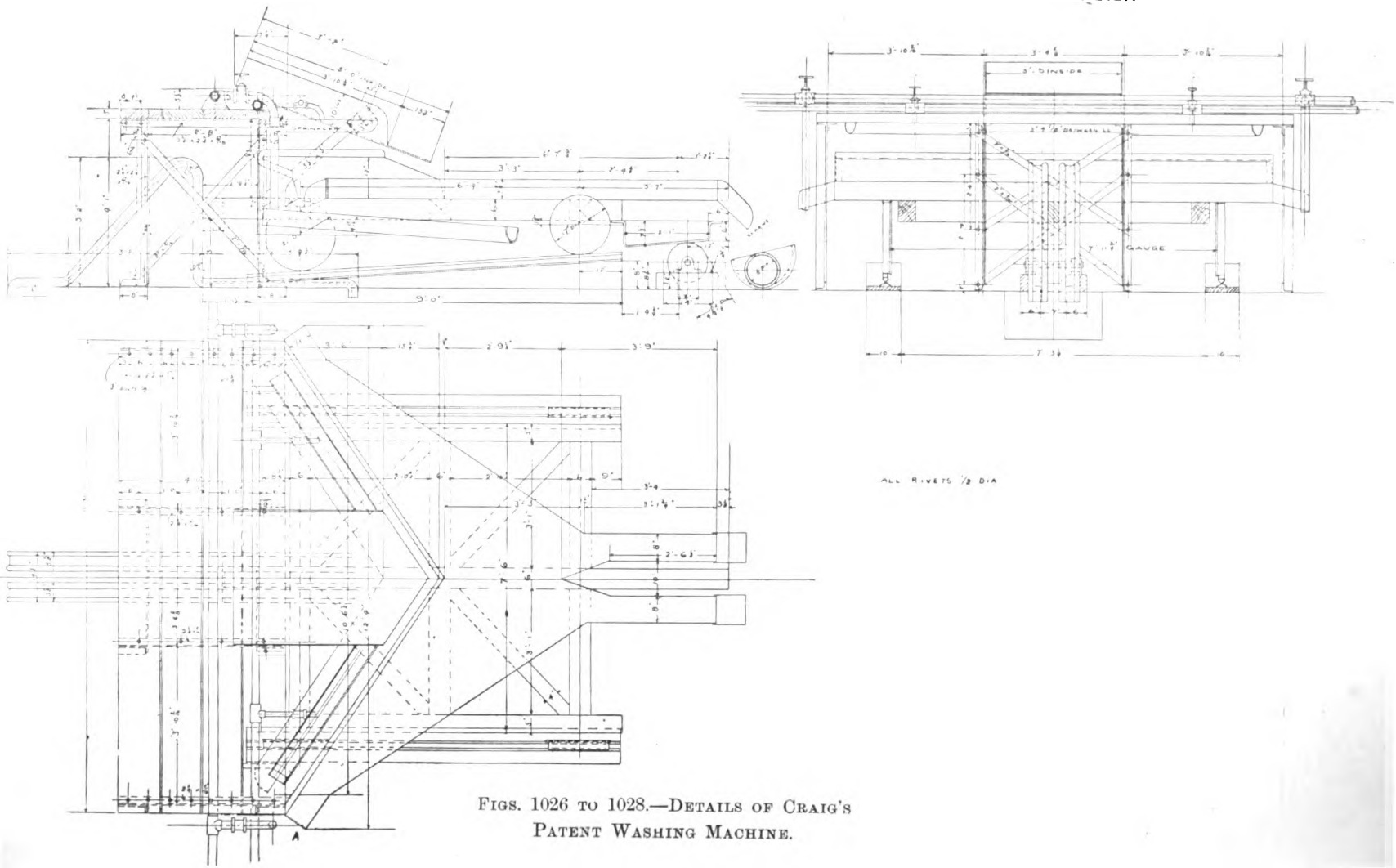

Fig. 1028.

Figs. 1026 to 1028.—Details of Craig's Patent Washing Machine.

storage bunker, and is discharged from there into disintegrators, where it is finely ground up, and discharged into the boot of an elevator which raises it to the washery scrubber as shown in fig. 1024. The scrubber consists of a circular tank filled with water from the water tank situated above it, into which the coal direct from the disintegrators is discharged, and is there constantly mixed and stirred up by revolving arms or "agitators." A number of shoots radiate from this scrubber as shown in figs. 1029 — the scrubber being situated in the centre—from which the coal is discharged into launders and conveyed to each of the washers, where it is received on the shoot attached to the machine framing as shown in fig. 1026, which delivers it on to the "bumping tray." This consists of a triangular-shaped tray mounted upon a bogie running upon inclined rails, the tray itself being level, or nearly so. At the lower end of the incline, strong buffers are erected, and the bogie is alternately pushed up the incline by means of a cam working against a cast steel block fixed to the end of the tray, and drawn quickly back by means of a strong spring with a "bang," so to speak, against the buffers. The shaft to which the cam is attached makes thirty revolutions per minute, the movement being 6 in., and the jerk thus given to the particles of mixed coal and dirt is sufficient to arrest the forward motion of the heavier dirt, but not the lighter coal, which is carried forward by the water and discharged over the end of the tray opposite the buffers into the canal, which conveys it to the draining tanks as shown in fig. 1020. The result of the shock upon the dirt is that it gradually works backward, and is finally discharged at the outlets on either side of the machine, by the aid of the "sprinklers," which wash it off into launder troughs as shown in fig. 1030, and conveyed to the dirt bunker shown in figs. 1020 and 1022. The floor of the machine consists of steel plates, lap jointed, which form ridges, over which the coal is washed, and the number of these ridges, together with the inclination of the floor, assist in the separation of the particles. The dirt passes off at both sides of the machine, and would form into a hard compact mass, were it not for the sprinklers, which allow a small stream of water to play upon the *débris* and washes it off the tray.

The results obtained from this machine are remarkable, and it is probably the most efficient machine for separating fine coal from fine dirt that is at present on the market, and is probably the only machine that will separate shale dust from coaldust. As an instance it may be stated that the *débris* from a Robinson washer, on being treated by this machine, returned something like 70 per cent. of coal, though, of course, this result was not due so much to the efficiency of the "Craig" washer, but to some extent to the inefficiency of the former; but in another case the sludge *débris* from a "Baum" type washer, when treated by the "Craig" washer, yielded 50 per cent. of clean coal, and in another case a brown shale dust

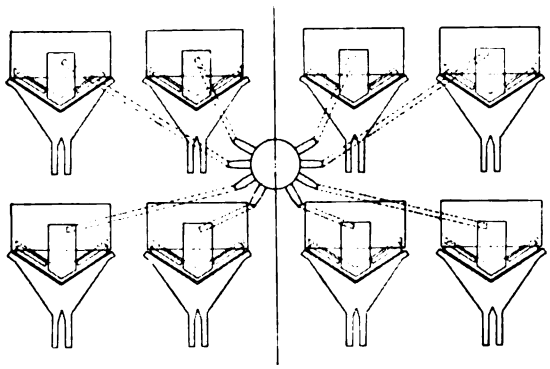

FIG. 1029.—PLAN OF SHOOTS FROM SCRUBBER TO TRAYS.

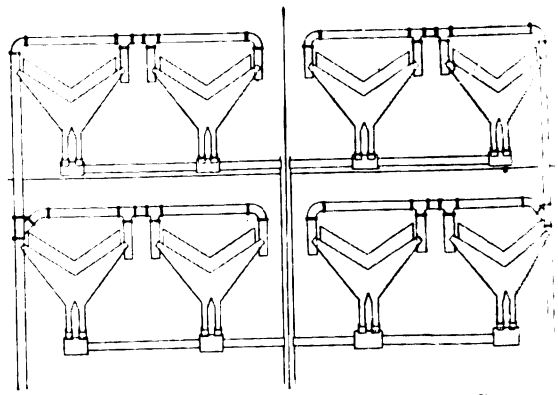

FIG. 1030.—ARRANGEMENT OF WASHED COAL AND DIRT PIPES.

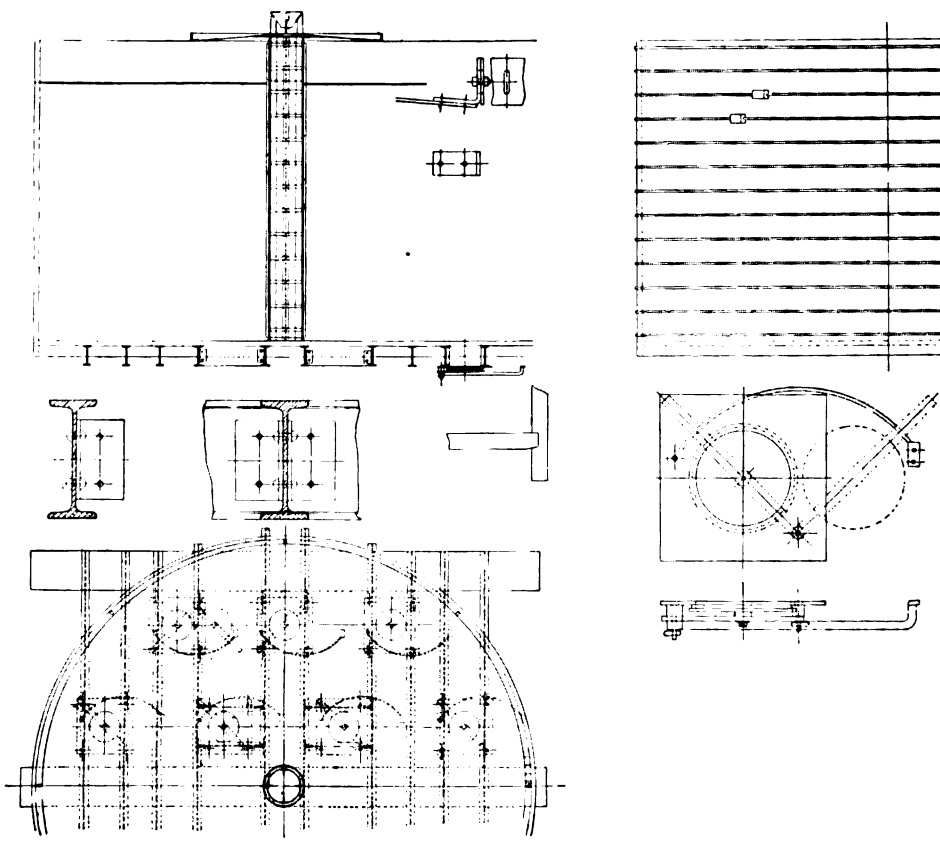

FIGS. 1031 TO 1034.—CRAIG'S PATENT WASHER, COAL DRAINING BUNKER.

with a specific gravity closely approaching that of the coal was removed, which was impossible in any other type of machine. The water passing away with the dirt, instead of being "black" is practically clean, and certainly is clear enough to allow the dirt to be clearly seen in the water. Whilst, however, the result so far as the treatment of fine coal is everything that could be desired, it is not so certain that equally satisfactory results would be obtained when treating "nut" coal, and so far its operation has been solely confined to coal that admits of first being ground up.

After leaving the washer the clean coal is conveyed in launders to the draining tanks or bunkers, shown in fig. 1020, and in detail in figs. 1031 to 1034. These are simply huge wood barrels, about 30 ft. in diameter by about 19 ft. in depth, and rest upon a grill formed of rolled joists. In the centre of the barrel is a perforated pipe, which allows the water to flow off, and drain out of the coal. Each bunker is allowed to stand for about twenty-four hours before the coal is taken out to allow water to drain off. The bottom of the bunker is provided with a number of doors, which are immediately over a travelling belt, which conveys the coal to a cross belt, which in turn delivers it directly to the coal compressing machine, where it is compressed previous to being charged into the coke oven. A special feature of the conveying belts is that one set of belts, mounted upon a separate frame and running upon rails, is so arranged that they may be run under either of the four storage bunkers, according to which is ready for emptying.

One of the most important points in connection with coal washing is that of draining. Where the coal is for coking, the amount of moisture must not exceed 10 per cent., and it is for this reason that in many cases vast storage hoppers have been erected in connection with coal washers for coking purposes, merely for the purpose of allowing the coal to drain, the cost of the hoppers being a very serious item in the total expenditure. Where nut coal is loaded into wagons, the difficulty is not experienced so much, as the water readily drains from the wagons, except in wintry weather, when very often the coal frozen in the wagons gives considerable trouble, and especially where it has to be shipped. In order to save the expense attached to the hoppers and the difficulty experienced with frozen coal, the author suggested that some means be adopted for partially drying the coal, and is a matter that needs attention, though Messrs. Campbell, Binnie and Co., who went into the question in connection with a coal washer to deal with 1,500 tons of coal in ten hours, were able to give a guarantee that the amount of moisture contained in the coal delivered to the coal compressor hopper would not exceed 10 per cent. without the use of any costly intermediate storage or draining hoppers. There is probably another advantage in being able to dry the nut coal, and that is, any objection on the part of consumers that the coal is wet is removed, and the demand for dry washed nut coal would be considerably increased.

Fig. 1035. Fig. 1036. Fig. 1037. Fig. 1038.

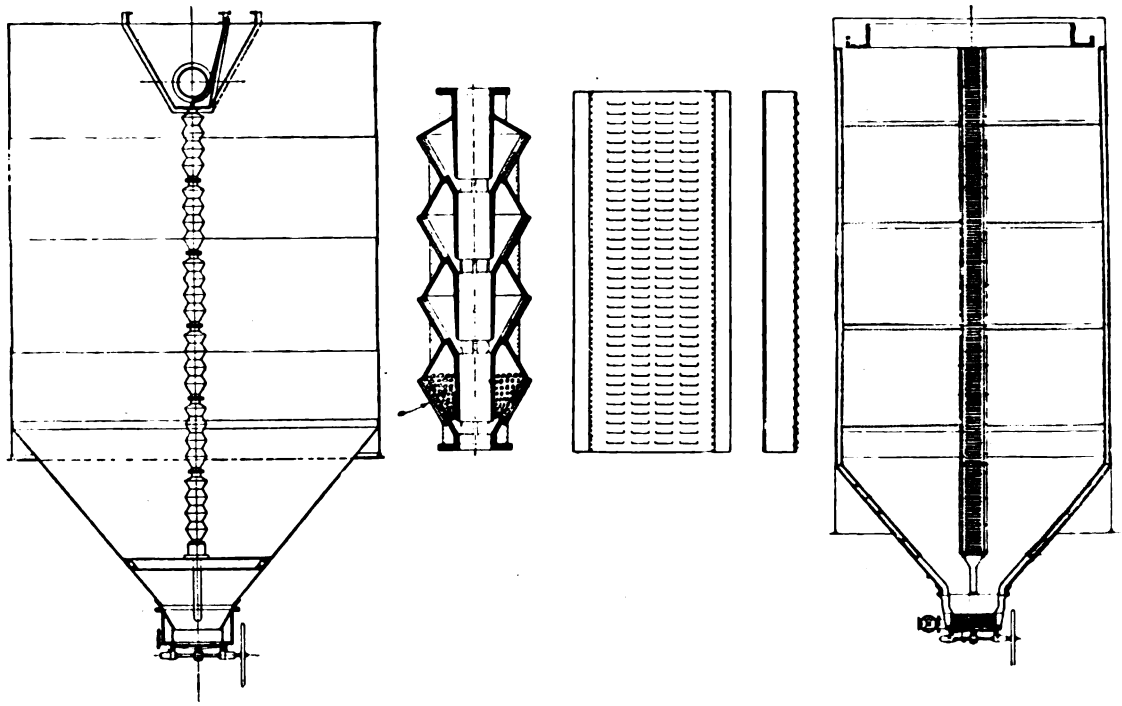

Figs. 1035 to 1038.—Humboldt Draining Hoppers.

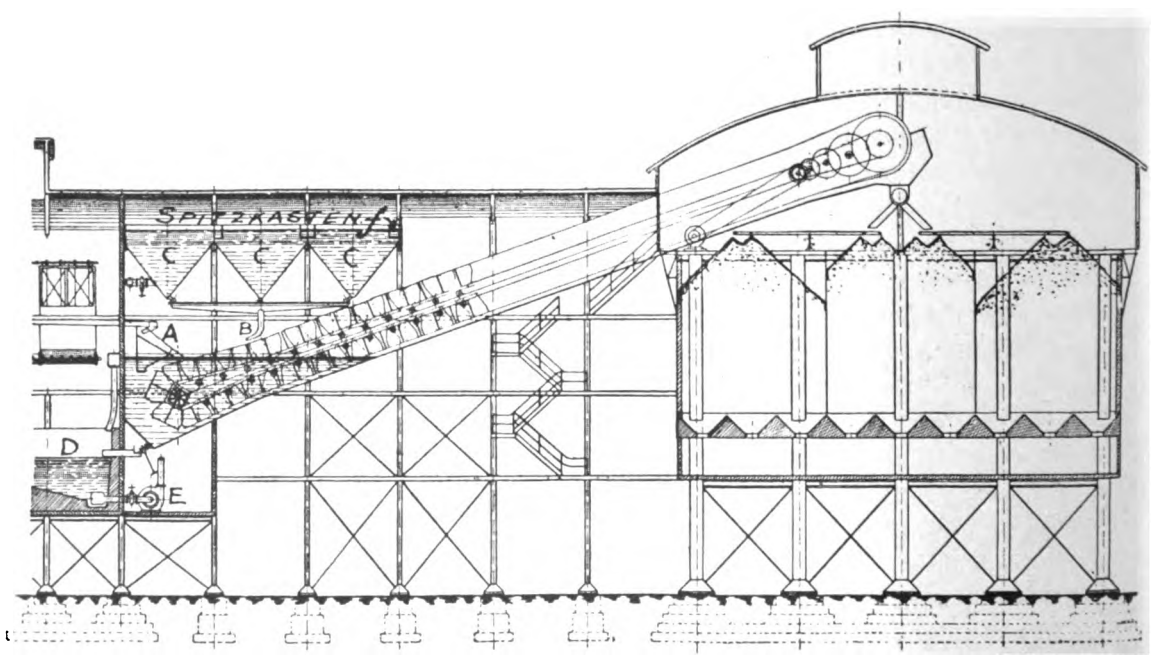

Fig. 1039.—Humboldt Fine Coal Draining Screen.

As already stated, the question of draining the nut coal is not so difficult, and merely requires judicious treatment on proper shaking screens; to pass the coal over fixed draining screens is not enough, as the water adhering to the surface of the cube is not sufficiently removed. The difficulty is experienced much more in dealing with the fine coal, as the consistency of the mass will not allow the water to drain readily. Messrs. the Humboldt Company use a special form of draining pipe in the centre of coal hoppers as shown in figs. 1035 and 1036, which, as will be seen, consists of a series of double cones, the lower portion being perforated with holes as shown in fig. 1036; while another arrangement consists in arranging round the sides of the hopper rectangular-shaped boxes, the front being fitted with "Venetian" perforations, as shown in figs. 1037 and 1038. In both cases the water collects at the bottom of the hopper cone, and is there drawn off by means of a pipe. The hand-wheel is for the purpose of opening the slide for discharging the coal. Another arrangement is shown in fig. 1039. Here a specially constructed draining belt, in which the sides and the cross stiffening plates form box-like divisions with perforated plate bottoms. These are connected by link chains, the side plates forming the inner links of the chain, the whole running over rollers, spaced so as to give a wave-like motion, causing the coal to be alternately compressed and loosened, thus facilitating the drainage. The coal is delivered to the belt from the washer by the screen A which drains off part of the water which overflows into the tank D. The belt of course is contained in a watertight frame, the lower end of which forms a water tank. The dirty water from the tank D, which contains fine coal in suspension, is pumped up to the *Spitzkasten*, consisting of a row of tanks C shaped like inverted pyramids, the total volume of which is considerably more than the tank D. In reality they are settling tanks, and the coal gradually settles to the bottom, when it is drawn off from time to time by means of a pipe fitted with a cock. The coal so gathered has a consistency of thin mud, and is delivered on top of the fine coal draining belt by means of the pipe B, and by this means a considerable portion of the coal in the slimes is recovered. The tanks C are provided with overflow channels *f*, which conduct the water back to the clean reservoir to be used over again.

Another arrangement of sludge apparatus by the same firm is shown in figs. 1040 to 1045 (the dimensions given are in millimetres), which is more especially adapted for use where the dirty water from the washers contains clayey constituents, which is always a more or less difficult matter to deal with. The apparatus consists of a steel cylinder A A, with a conical bottom, having a screen C at the top and another, E, at the bottom, while the conical-shaped portion is also provided with a screen B, C and B being fine screens and E being a coarse screen. The shaft D driven by the bevil spur gearing above, has fixed to it above the screen E "agitators" or "stirrers" with serrated edges, and a pair of scrapers above the screen B, while

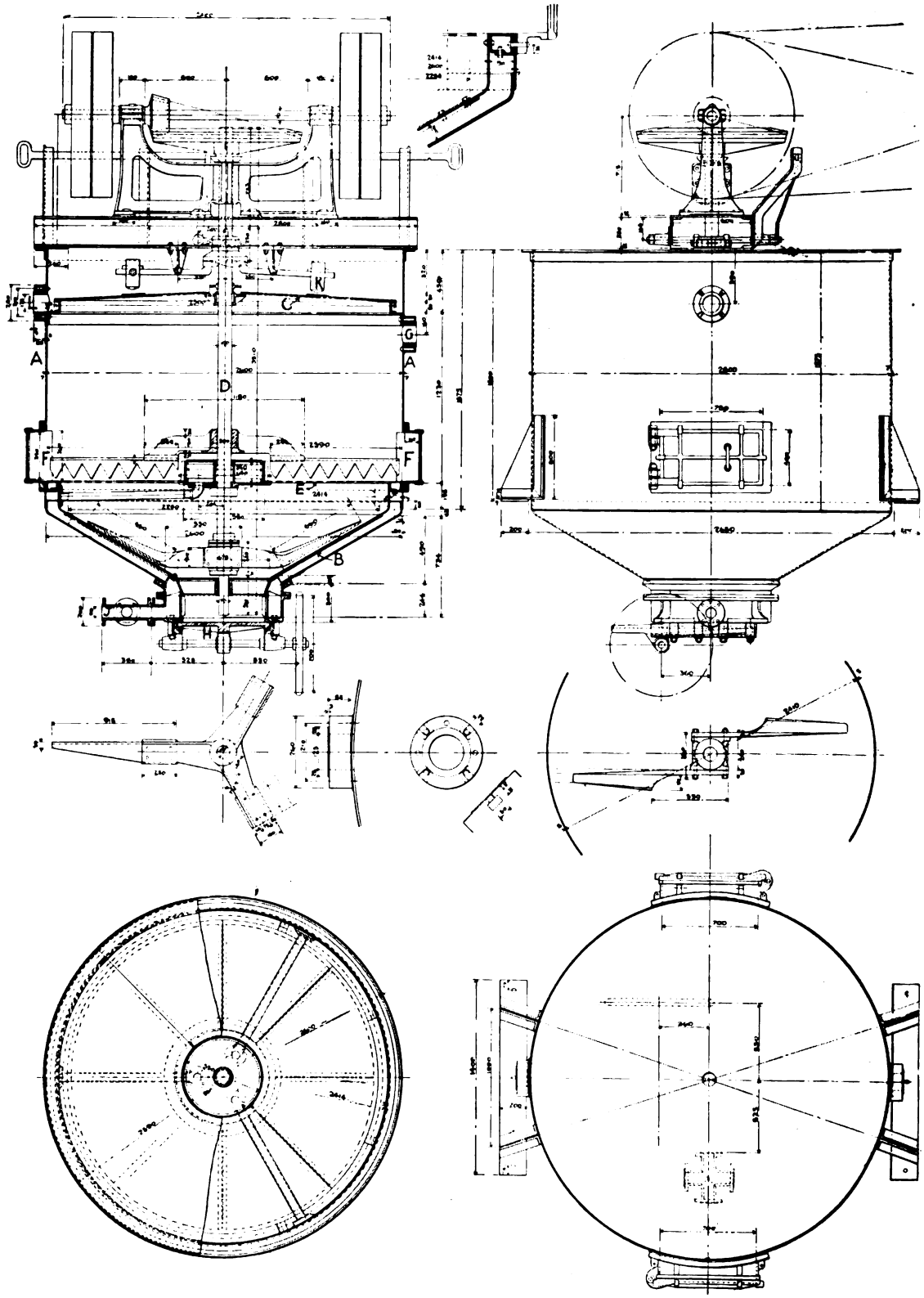

FIGS. 1040 TO 1045.—HUMBOLDT SLUDGE APPARATUS.

the same shaft works a percussion arrangement, consisting of a pair of hammers K which strike the screen C to prevent the same from clogging. These are alternately raised and lowered by means of the cam immediately above the ends of the two levers. The muddy water is delivered at G, and so long as the water enters, the agitators are constantly stirring up the mixture, and the water overflows at L through the upper screen C, carrying the fine useless coal with it, while the coarser coal remains in the apparatus. The mixture being thus constantly stirred, the dirt finally settles in the bottom, and is discharged through the slide H. As the apparatus fills, the muddy water is shut off, and a clean supply of water is turned on through the pipe J, which finally washes off any dirt on the remaining coal, which is afterwards removed through the openings F, fitted with watertight doors. The apparatus is somewhat similar to the "Robinson" washer, both in form and mode of action.

In the washing plants already described the coal is first classified into different sizes, and it has been shown that theoretically and practically this is the correct method. Some makers, however, still maintain the older system of first washing and classifying after, amongst others being the "Baum" washer, which, however, has another feature in the use of compressed air in place of the piston to give the pulsations. The Baum washer is shown in figs. 1046 and 1047 (Plate XCIII.), and consists of a large trough divided by a partition into two compartments similar to those already described, but very much larger. The pulsating motion is obtained by admitting air at a pressure of 48 in. water-gauge, from the pipe K through the valve I situated immediately over the compartment A, and worked by the eccentric K. The coal, varying in size from 0 to $3\frac{1}{2}$ in., is conveyed by launders to the washer entering at D and moves along the length of the washer, leaving at E. All the dirt settles to the bottom and is discharged through the orifices B and C, which are regulated by the levers F F, and over the dams, the latter being regulated by the levers G G; and passing down the chambers O and P is removed by the screw conveyor H H to the dirt elevator. The washing water enters at M and N, and the pulsating action is such that the upward flow of the water in the tank *d* is quicker than the backward one—a motion, however, that is just as easily attained by attaching the piston to a lever as previously described. Here, however, the peculiar claims made on behalf of this machine end, as the coal is then taken to a classifying screen, where it is sized and delivered into the respective bunkers after passing over a draining screen and receiving a clean water washing spray, but the coal from $\frac{1}{4}$ in. downwards is taken to another washer and re-washed, in a similar machine; which is exactly what one might expect, as it is practically an impossibility, for the reasons already given, to wash out all the dirt from a mixture of coal and shale having particles varying in dimension from 0 to $\frac{3}{4}$ in., and as a matter of fact the machine

does not do this, and it is a very controversial point whether the efficiency would not be much better if the coal were sized into two or three sizes *before* being washed. The intergrown coal is crushed and re-washed in another washer if the quantity is sufficient to be worth recovery.

The fine coal is drained on a draining conveyor similar to the one already shown in fig. 1039, but of considerably larger proportions. This is shown in fig. 1048; and as will be seen, like fig. 1039, the slurry coal is delivered on to the clean coal as it passes along. The conveyor is made with perforated plates A, hinged together, and carrying in the centre a double vertical partition B made of perforated sheets stiffened with angle bars, and two upright sides C and D which are also perforated, thus forming a series of boxes hinged together in the middle of their length. The washing water with the coal passes over a jigging screen, allowing the water and fine coal to drain off, while the larger coal slides off into the conveyor as at H, so that the largest size coal is at the bottom of the box. The fine coal and slurry then spread over the sieve immediately over the conveyor, and are distributed on top of the coarse coal from I to J. As the conveyor moves a wave-like motion is given to it, alternately pressing and releasing the coal between the portions. The drip water is collected in a canal under the conveyor, and runs off at L into settling tanks to clarify. The regulation of the moisture depends upon the time it is allowed to remain in the conveyor, which travels at a speed of about 8 in. per minute.

The settling tank consists of a cone-shaped tank about 33 ft. diameter by 39 ft. deep, with a collecting trough around the circumference. The slurry is delivered at the centre, and the water passes outwards to the circumference, during which time any coal in suspension settles to the bottom, from which it is conducted in pipes in the form of mud to the draining conveyor if sufficiently clean, or is otherwise disposed of in other settling tanks, from which it is collected as required.

Figs. 1049, 1050 and 1051 show an arrangement of a "Baum" washing plant at Silverwood Colliery to deal with 130 tons per hour.

The coal to be washed is brought by means of two conveying belts direct from the screens into the feed hopper A of 100 tons storage capacity.

Arrangements are also made for bringing the coal to this hopper by means of railway wagons along sidings B and C.

From this hopper the coal is lifted by feed elevator D on to the washers, the first of which (E) extracts the heavy dirt, and the second (F) the lighter dirt. The coal then flows in a trough to the revolving screens G, where it is classified into nuts $1\frac{3}{4}$ in. to $\frac{3}{4}$ in., pea nuts $\frac{3}{4}$ in. to $\frac{3}{8}$ in., and smudge $\frac{3}{8}$ in. to 0 in. The nuts and pea nuts are swilled with clean water down shoots to their respective bunkers H and I, over which they are drained. These bunkers, which have a storage capacity of about 40 tons, are provided with spiral shoots to prevent breakage of the sized

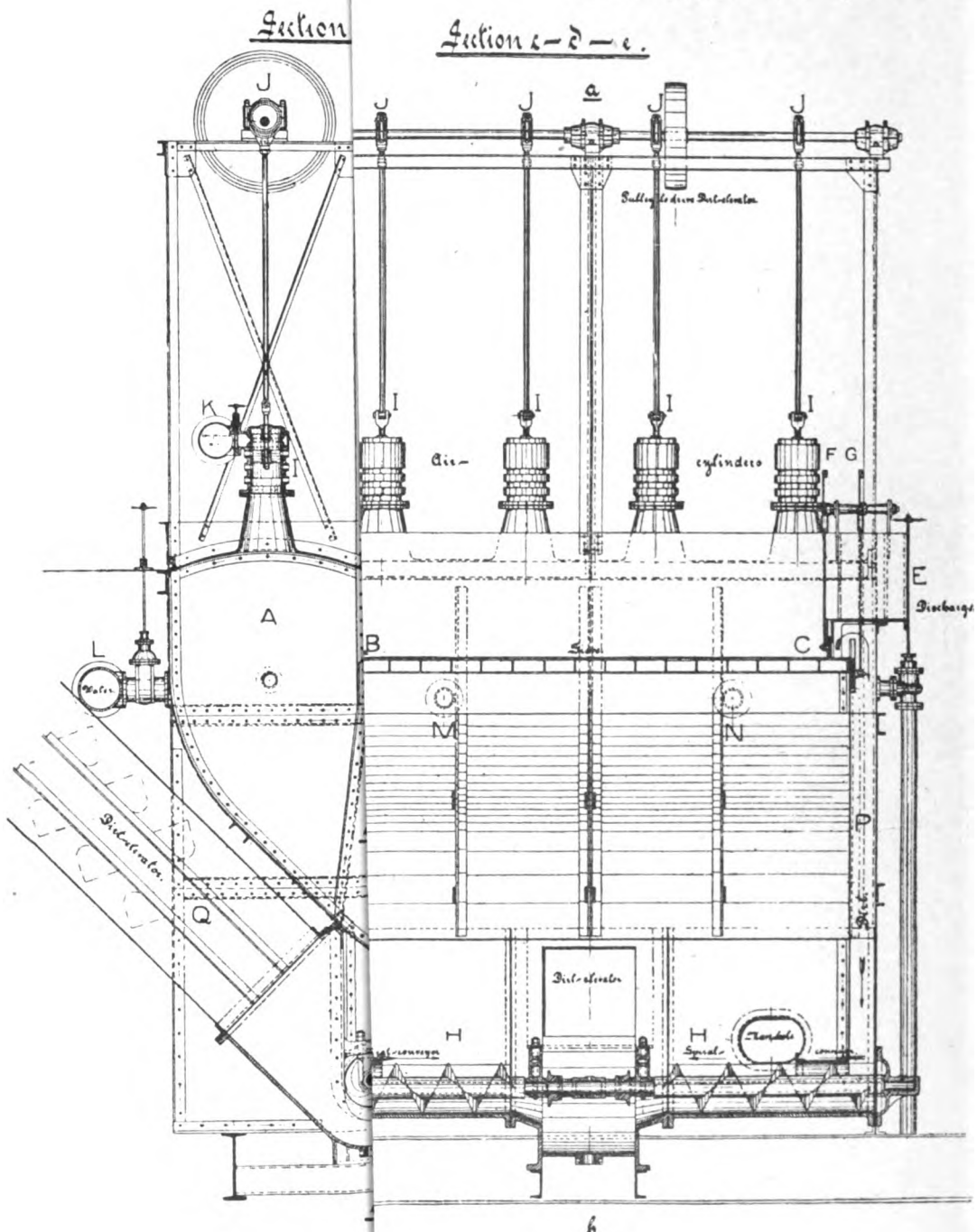

FIG. 1047.

; JIG.

PLATE XCIV.

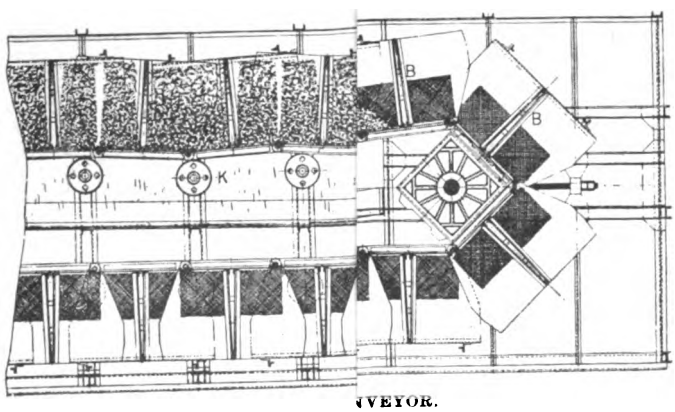

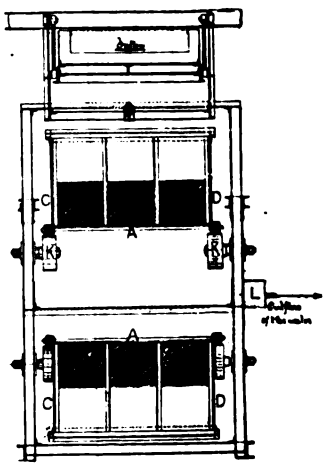

JVEYOR.

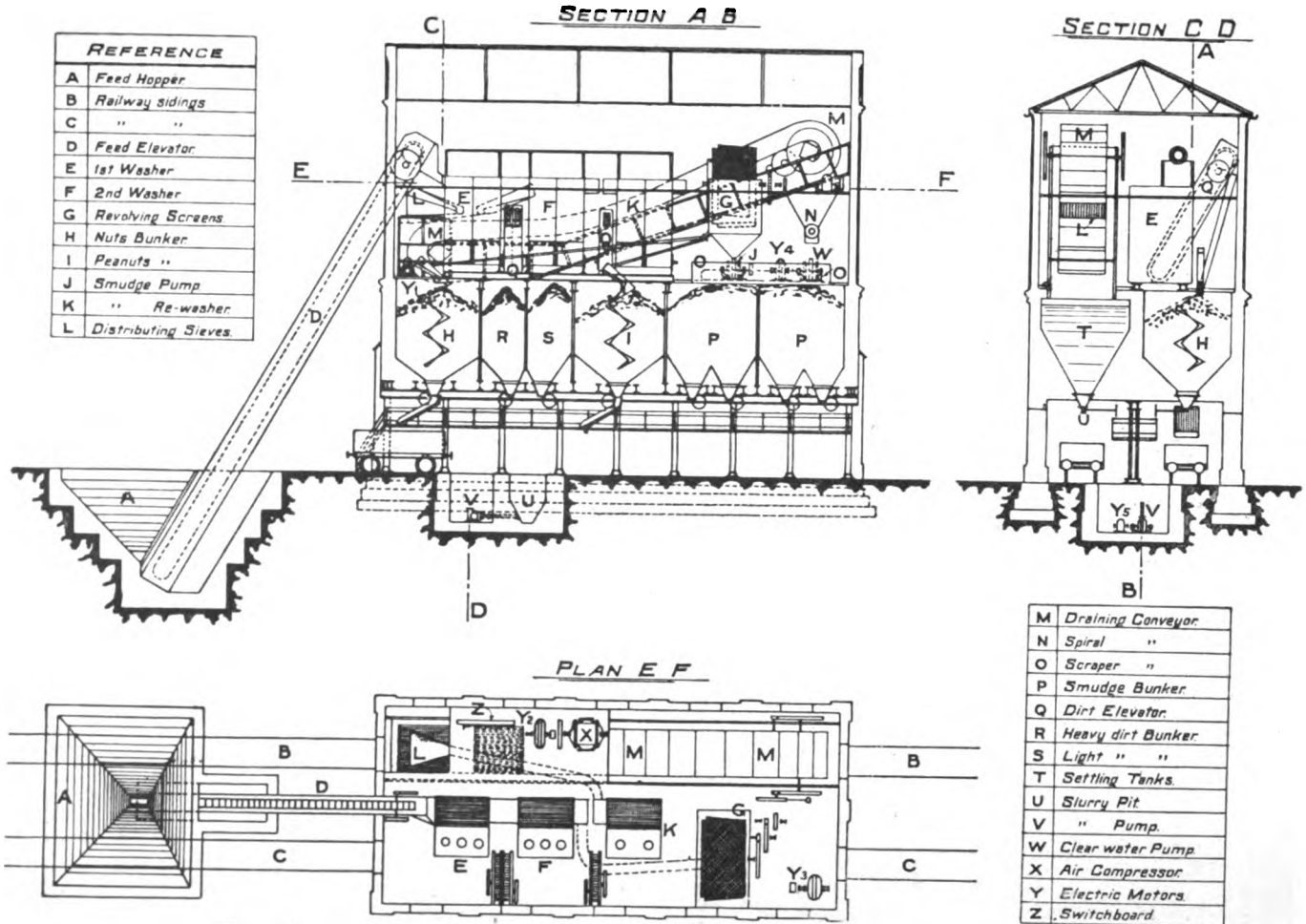

FIGS. 1049 TO 1051.—BAUM COAL WASHING PLANT AT SILVERWOOD COALIERY.

(Supplied by Simon-Carves Limited, Manchester).

products. The smudge below $\frac{3}{8}$ in. collects with the washing water in the bottom of the drum-casing G, from where it is delivered by the centrifugal pump J on to the smudge re-washer K. Here the smudge undergoes a thorough washing and is deprived of the last traces of dirt. It is then conveyed in a trough over the distributing sieves L, which separate the water from the smudge into the draining conveyor M. The latter delivers the smudge in a dry condition into the spiral conveyors M, which conveys the smudge on to the scraper O, which distribute the coal over the whole area of the bunker P, of about 120 tons storage capacity. The dirt from the washers is lifted and drained in the dirt elevators Q and shot into the hoppers R and S, the heavy dirt being delivered in the hopper R, the lighter dirt into S.

All the products are loaded by gravity from their respective bunkers over track C into railway wagons, but arrangements are also made for taking the coking coal directly in corves by an aerial ropeway to the storage hopper alongside the coke ovens. The nuts and pea nuts are rinsed before loading so as to give them a good appearance.

The water separated from the smudge on the distributing sieves L flows into the settling tanks T of 60,000 gallons capacity, where the slurry settles down and runs in troughs into the pit U, whence the slurry pump V lifts it on to the draining conveyor M. Here it is mixed with the fine coal, thus avoiding any loss of combustible matter. Not only loss of coal, but also of water is prevented, as the clarified water in the settling tanks is pumped by means of the centrifugal pump W back to the washers and used over again. Thus a complete circuit is established.

The air at a pressure of 60 in. water gauge for working the washers is delivered by compressor X.

The motive power is electricity, the whole plant being driven by five motors Y_1—Y_5 regulated from one switchboard Z. These motors are distributed as follows:—

Y_1. For feed elevator.
Y_2. For washers, compressor and dirt elevators.
Y_3. For revolving screens, draining conveyor, smudge pump and smudge conveyors.
Y_4. For clear water pump.
Y_5. For slurry pump.

The building consists of a brick-filled steel frame, supported upon pillars to allow wagons below.

As an alternative to employing eccentric or crank-driven pistons, or using compressed air, another arrangement has been adopted at collieries on the Continent. This arrangement, introduced by Herr Henri, consists essentially of a piston worked by hydraulic pressure, by means of a small cylinder placed over the tank, in which

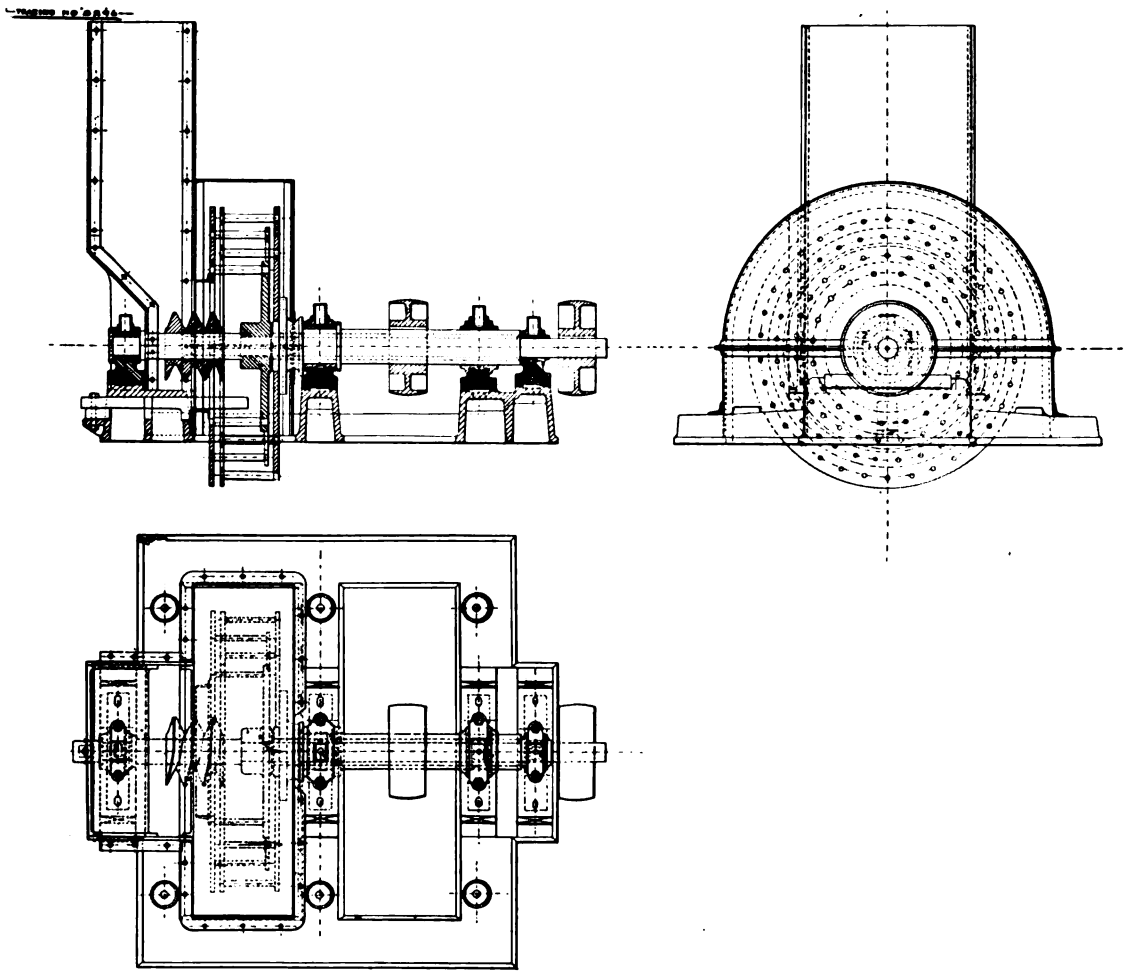

FIGS. 1053 TO 1055.—CAMPBELL, BINNIE AND CO.'S ARRANGEMENT OF DISINTEGRATOR.

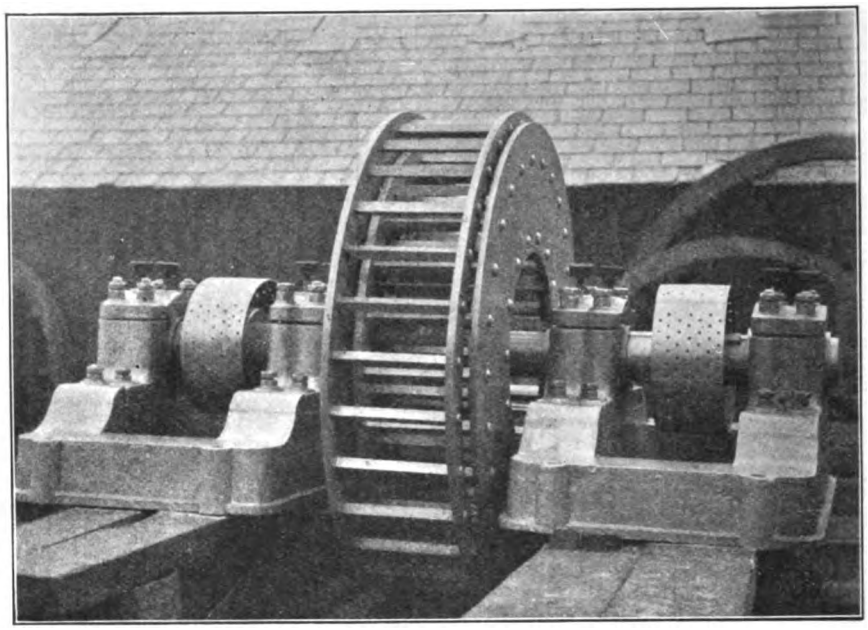

FIG. 1052.—DISINTEGRATOR WITH COVER REMOVED.
By Messrs. Jos. Cook, Sons and Co.

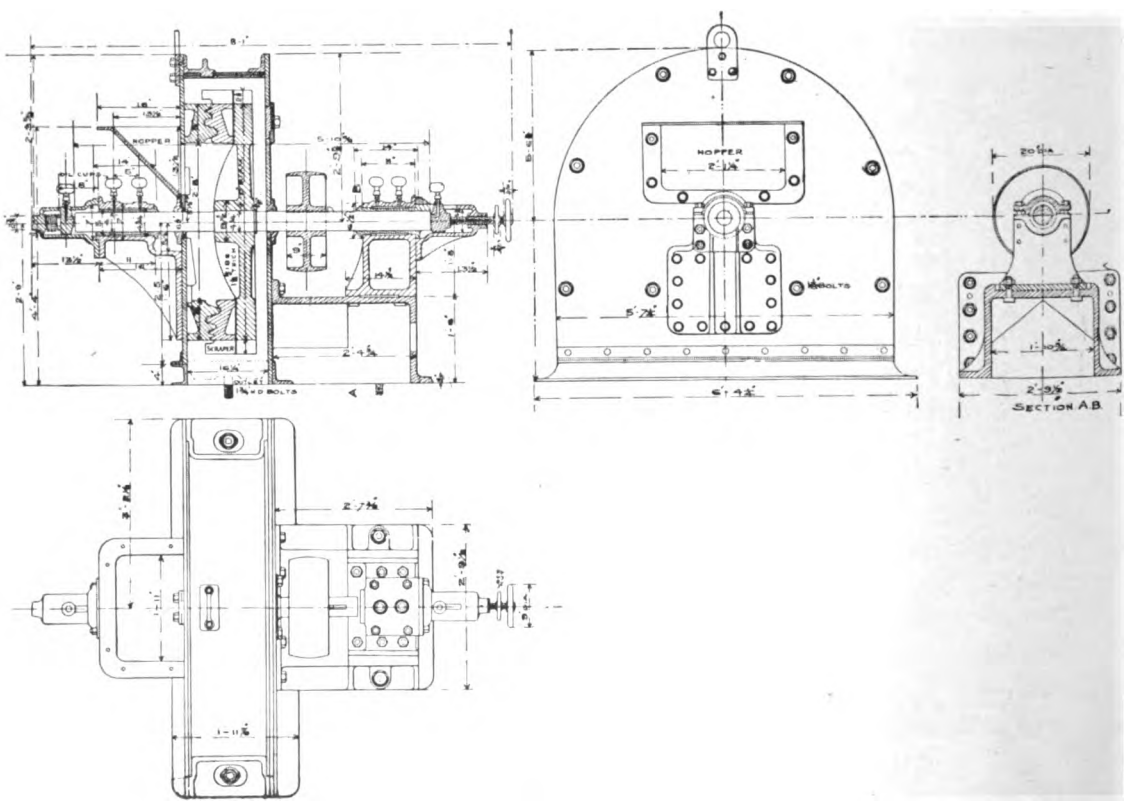

FIGS. 1056 TO 1058.—"DEVIL" DISINTEGRATOR.
By Messrs. the Hardy Patent Pick Co.

the piston attached to the rod of the water piston works. Steel spiral springs are arranged on either side of the piston rod and the hydraulic pressure forces the piston down against these springs, which, on the pressure being taken off, brings the piston back again. The water is transmitted through an accumulator to a specially designed pump, having an adjustable crank arm whereby the length of the pulsations may be adjusted, while a valve is fitted to the washer cylinder to regulate the pressure. The advantages claimed for the system are that all overhead shafting, belt pulleys, slide-valves, &c., are avoided; the length of stroke and number of pulsations are easily controlled from one point; and it is furthermore claimed that a much greater efficiency is obtained as compared with compressed air.

Coal is usually crushed in disintegrators before coking, and fig. 1052 illustrates a "Carr's" disintegrator by Messrs. Jos. Cook, Sons and Co., arranged for driving by two belts, one on either side. As is well known, the disintegrator consists of a circular plate keyed to a horizontal shaft, having two rows of round or square bars, riveted into the plate and supported at the outer ends by a plain ring. Two sets of these rings are fitted together as shown, and revolve at a high speed in opposite directions, each set of rings in fig. 1052 being driven from opposite sides, while the bars are square. The coal is fed in at the centre, and as it falls between the bars is struck first in one direction and then the other, and so broken up into very fine particles. It is not advisable, however, to put large lumps of coal into these machines, and consequently the large pieces should first receive a preliminary breaking, to at least cubes of about 1 in. diameter.

An improved disintegrator, by Messrs. Campbell, Binnie and Co., is shown in figs. 1053, 1054 and 1055. In this case the machine is driven by two belts from one side only, which necessitates the use of a hollow shaft. Considerable trouble has been experienced with machines designed on this principle, owing to the bearings being only two in number, and set too close together. In this case, however, three bearings are adopted, which are well apart to resist the overhanging weight of the disintegrator, and further the belt pull of the solid shaft is taken by its own bearing on a separate foundation. A screw feed is arranged to regulate a constant supply of coal to the bars from the hopper above.

A machine largely used for crushing purposes is the "Devil" disintegrator, shown in figs. 1056 to 1058, by Messrs. the Hardy Patent Pick Company, and is eminently suitable for crushing or grinding coal. The machine consists of a steel plate casing, to one side of which is bolted a hardened cast steel ring with projections upon it, which fit into the grooves of a similar ring bolted to a disc keyed to a shaft, so that the two rings appear in section like interlocked teeth as shown in fig. 1056. The ring on the disc only revolves, the other being stationary, and the material is fed in at the centre as in the disintegrator. The projections, however,

are not continuous, but spaces or openings are left, at unequal distances apart, into which the material to be crushed falls, and is thus caught by the teeth of the revolving ring. The end of the shaft is provided with a thrust block, and a strong spiral spring to regulate the pressure between the faces.

Storage hoppers are variously constructed of steel, steel and brickwork, or of ferro-concrete, the latter having many advantages, but is very expensive.

Bibliography.—Federated Institution of Mining Engineers. Institution of Civil Engineers for "The Concentration and Sizing of Crushed Materials," R. E. Commans. "Coal Screening and Sizing," J. Rigg. "Hydraulic Decking," *Colliery Guardian*, September 7, 1906. "A Text-book on Mining," by H. W. Hughes. "Dry or Wind Method of Coal Cleaning," by E. P. Rathbone, *Transactions* of the North of England Institute of Mining and Mechanical Engineers, vol. xxix., p. 159. "Report of Committee on Coal Cleaning," Mining Institute of Scotland, vol. xi., p. 145. "Lectures on Mining," by Professor Galloway. "Anthracite Breaking and Sizing Plant at Glyncastle Colliery," by W. D. Wight, *Transactions* Federated Institution of Mining Engineers, vol. xii., p. 238.